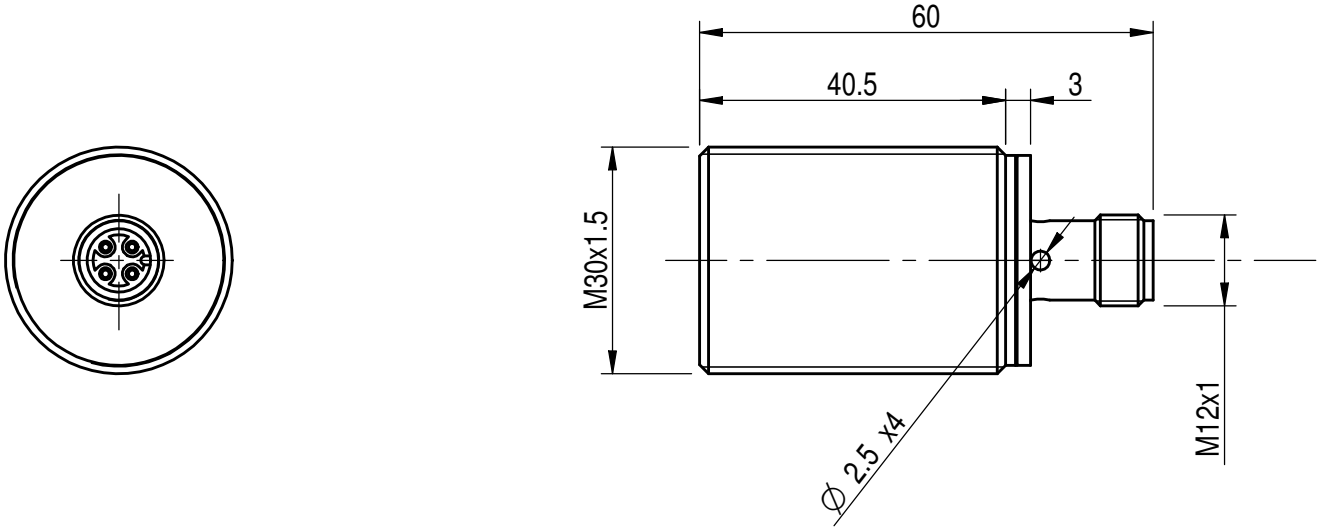AbN
automation