Mechanical Cam Switches

BNS 819-D04-R12-100-10-FE
Order Code: BNS00J6

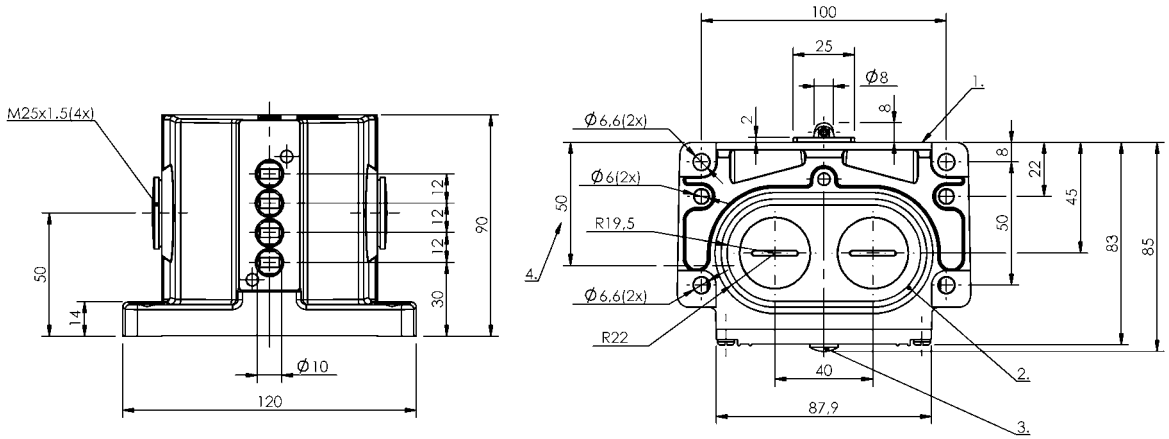

1) Reference edge, 2) Sealing ring, 3) Function indicator FD/FE/LL, 4) Cable passage

Basic features

Approval/Conformity	CE UKCA CCC WEEE
Basic standard	IEC 60947-5-1
DIN switch	DIN 43697
Operating principle	1-4. Switch position: Mechanical
Version	Snap contact

Display/Operation

Function indicator	1-4. Switch position: FE - 90...250 V

Electrical connection

Connection type	1-4. Switch position: Screw terminal

Electrical data

Continuous current	1-4. Switch position: 6 A
Rated operating voltage Ue	1-4. Switch position: 250 V AC
Switching function mechanical	Double-interrupting galvanically isolated One NO and one NC Dual changeover
Switching rate	1-4. Switch position: 300/min

Environmental conditions

Ambient temperature	-5...85 °C
IP rating	IP67

Functional safety

B10d (EN ISO 13849-1)	BSE 30.0: 30 mil. switching cycles

Material

Housing material	Aluminium, Anodized
Housing material, surface protection	Anodized
Material contacts	1-4. Switch position: Silver, gold plated
Plunger material	1-4. Switch position: 1.4034 stainless steel

Mechanical data

Approach direction	longitudinal, parallel to attachment surface
Approach speed	1-4. Switch position: 60 m/min
Distance cam - reference edge	1-4. Switch position: 4.50...5.00 mm
Flange, feed-through	2 threaded exit M25
Installation	Vertical
Life expectancy mechanical	1-4. Switch position: 30 mil. switching operations
Number of switching positions	4x Roller Mechanical
Plunger style	1-4th switch position: Roller
Switch actuation force	1-4. Switch position: 20 N
Switching element	1-4. Switch position: BSE 30.0

Range/Distance

Reproducibility	1-4. Switch position: ±0.01 mm

Wiring Diagrams
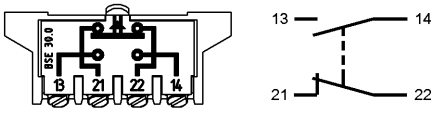
BSE 30.0