AbN
automation

Y-Splitters

BCC S414-S425-S425-U2043-015
Order Code: BCC0EWJ

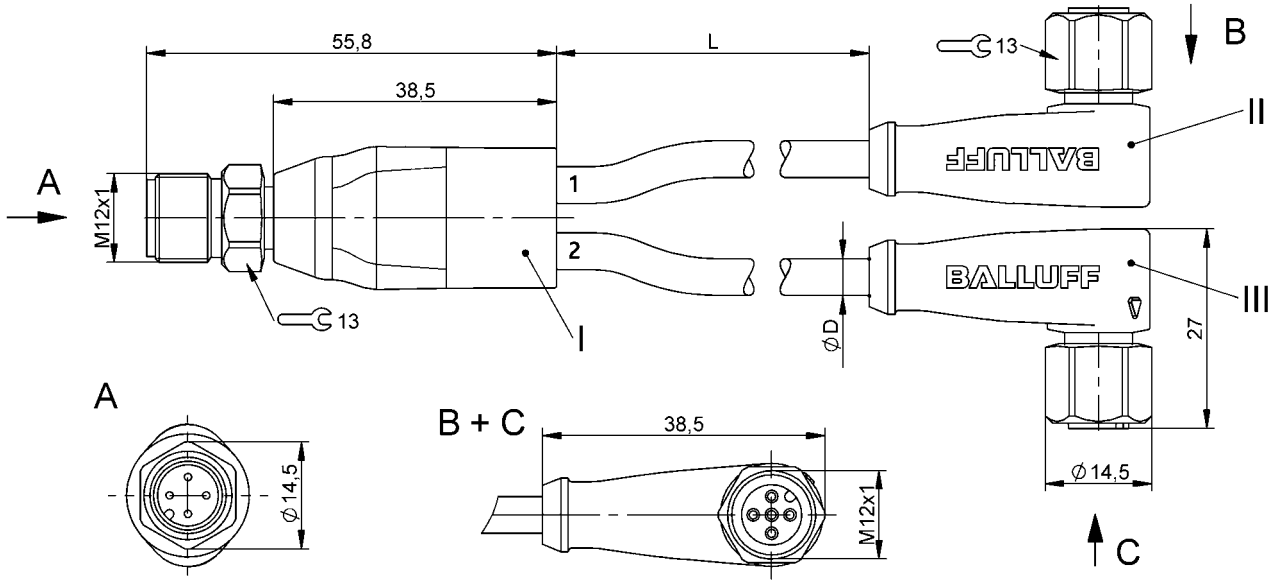

Basic features

Approval/Conformity	CE Ecolab WEEE

Electrical connection

Bending radius min., fixed cable	5 x D
Bending radius min., flexible cable	10 x D
Cable diameter D	4.50 mm ±0.15 mm
Cable, bending cycles min.	2 mil.
Conductor cross-section	0.34 mm²
Connection 1	M12x1-Male, straight, 4-pin, A-coded
Connection 2	M12x1-Female, angled, 5-pin, A-coded
Connection 3	M12x1-Female, angled, 5-pin, A-coded
Connector 01, version	straight
Connector 02, version	angled
Connector 03, version	angled
Number of conductors	3/3
Number of pins	4/5/5
System	Molded/Molded/Molded

Electrical data

Operating voltage Ub	250 VDC / 250 VAC
Rated current (40 °C)	4.0 A

Environmental conditions

Cable temperature UL max., fixed routing	105 °C
Cable temperature UL max., flexible routing	80 °C
Cable temperature, drag chain	-5...60 °C
Cable temperature, fixed routing	-40...105 °C
Cable temperature, flexible routing	-5...105 °C
IP rating	IP69K/IP69K/IP69K

Material

Cable jacket, material	PVC
Material contact carrier	PUR/PUR/PUR
Material contacts	Brass/Bronze/Bronze
Material cover nut	1.4404 stainless steel/1.4404 stainless steel/1.4404 stainless steel
Material grip	PUR/PUR/PUR

Mechanical data

Acceleration max., drag chain	5 m/s²
Cable jacket, color	gray
Cable length L	1.50 m
Cable properties	drag chain compatible
Horizontal travel permitted, drag chain	5 m
Tightening torque pigtail	0.6 Nm/0.6 Nm/0.6 Nm
Traverse speed max., drag chain	200 m/min
Vertical travel permitted, drag chain	2 m

Remarks

Cable construction acc. to UL-AWM Style 2517
Enclosure rating per IEC 60529, only in screwed state with the associated mating piece.
Flame resistance acc. to IEC 60332-2 and VW1 (UL1581)
Silicone-free

Connector Drawings

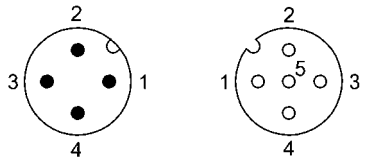

I II, III
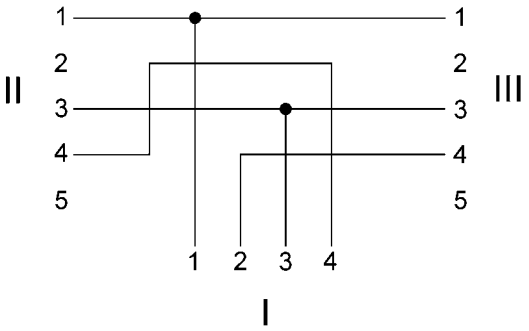
Wiring Diagrams