Mechanical Cam Switches

BNS 813-D06-R16-100-22-06
Order Code: BNS015H

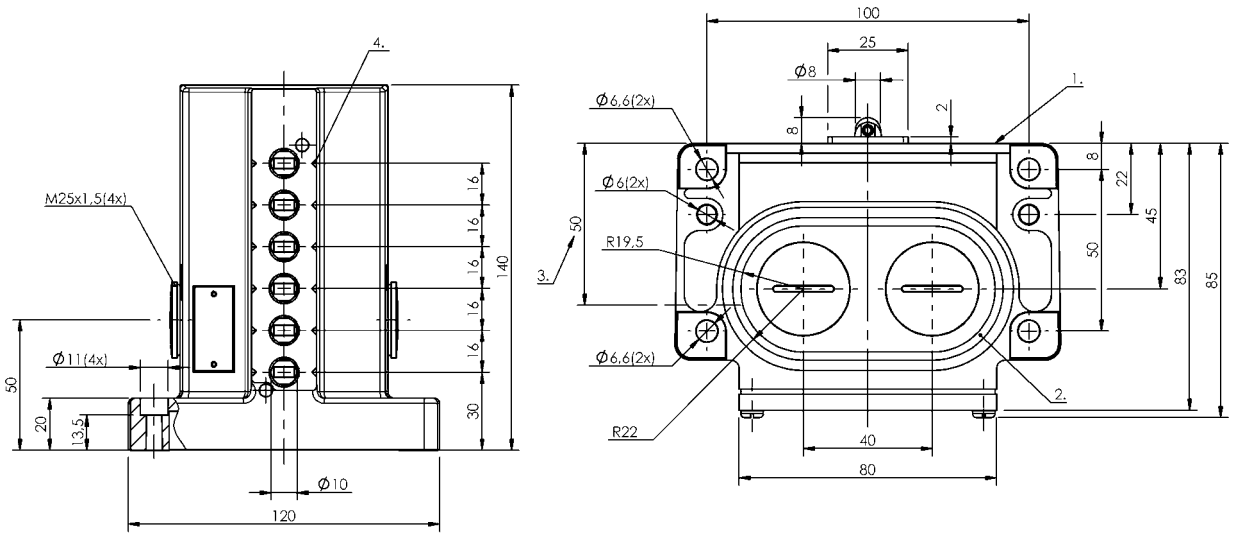

1) Reference edge, 2) Sealing ring, 3) Cable passage, 4) Mark. Safety switch position

Basic features

Approval/Conformity	CE UKCA CCC WEEE
Basic standard	IEC 60947-5-1
DIN switch	DIN 43697
Operating principle	1-6. Switch position: Mechanical
Version	Safety EN 60204-1

Display/Operation

Function indicator	1-6. Switch position: None

Electrical connection

Connection type	1-6. Switch position: Screw terminal

Electrical data

Continuous current	1-6. Switch position: 6 A
Rated operating voltage Ue	1-6. Switch position: 250 V AC
Switching rate	1-6. Switch position: 160/min

Environmental conditions

Ambient temperature	-5...85 °C
IP rating	IP67

Functional safety

B10d (EN ISO 13849-1)	BSE 85: 1 mil. switching cycles

Material

Housing material	Aluminium, Anodized
Housing material, surface protection	Anodized
Material contacts	1-6. Switch position: Silver
Plunger material	1-6. Switch position: 1.4034 stainless steel

Mechanical data

Approach direction	longitudinal, parallel to attachment surface
Approach speed	1-6. Switch position: 60 m/min
Distance cam - reference edge	1-6. Switch position: 4.50...5.00 mm
Flange, feed-through	2 threaded exit M25
Installation	Vertical
Life expectancy mechanical	1-6. Switch position: 1 mil. switching operations
Number of switching positions	6x Roller Mechanical
Plunger style	1-6th switch position: Roller
Switch actuation force	1-6. Switch position: 30 N
Switching element	1-6. Switch position: BSE 85

Range/Distance

Reproducibility	1-6. Switch position: ±0.02 mm

Wiring Diagrams
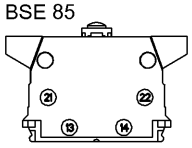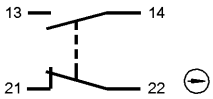
BSE 85