AbN
automation

Mechanical Cam Switches

BNS 813-D02-L12-100-20-01-FC
Order Code: BNS050J

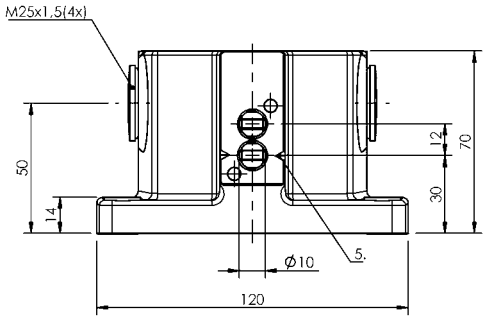

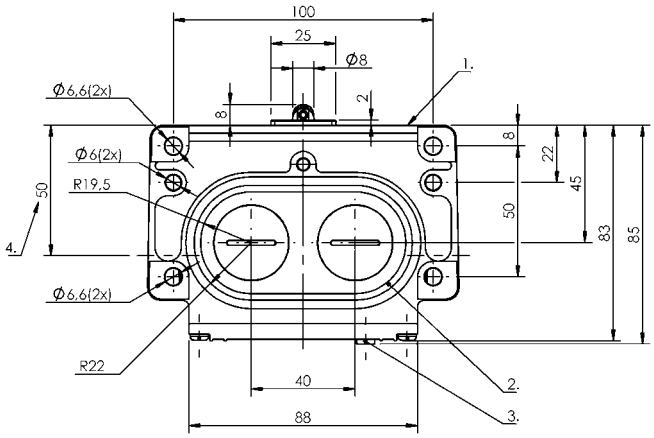

1) Reference edge, 2) Sealing ring, 3) Function indicator FC, 4) Cable passage, 5) Mark. Safety switch position

Basic features

Approval/Conformity	CE CCC WEEE
Basic standard	IEC 60947-5-1
DIN switch	DIN 43697
Operating principle	1-2. Switch position: Mechanical
Version	Safety EN 60204-1

Display/Operation

Function indicator	1-2. Switch position: FC - 6...24 V

Electrical connection

Connection type	1-2. Switch position: Screw terminal

Electrical data

Continuous current	1-2. Switch position: 6 A
Rated operating voltage Ue	1-2. Switch position: 250 V AC
Switching rate	1. Switch position: 160/min 2. Switch position: 300/min

Environmental conditions

Ambient temperature	-5...85 °C
IP rating	IP67

Functional safety

B10d (EN ISO 13849-1)	BSE 85: 1 mil. switching cycles BSE 30.0: 30 mil. switching cycles

Material

Housing material	Aluminium, Anodized
Housing material, surface protection	Anodized
Material contacts	1. Switch position: Silver 2. Switch position: Silver, gold plated
Plunger material	1-2. Switch position: 1.4034 stainless steel

Mechanical data

Approach direction	longitudinal, parallel to attachment surface
Approach speed	1. Switch position: 80 m/min 2. Switch position: 120 m/min
Distance cam - reference edge	1-2. Switch position: 4.50...5.00 mm
Flange, feed-through	2 threaded exit M25
Installation	Vertical
Life expectancy mechanical	1. Switch position: 1 mil. switching operations 2. Switch position: 30 mil. switching operations
Number of switching positions	2x Roller bearing Mechanical
Plunger style	1-2nd switch position: Roller bearing
Switch actuation force	1. Switch position: 30 N 2. Switch position: 20 N
Switching element	1. Switch position: BSE 85 2. Switch position: BSE 30.0

Range/Distance

Reproducibility	1. Switch position: ±0.02 mm 2. Switch position: ±0.002 mm

Wiring Diagrams

BSE 85

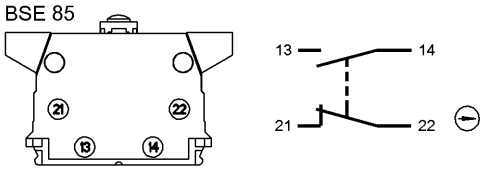
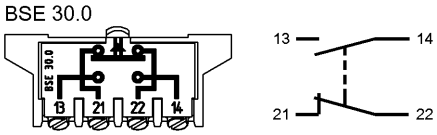
BSE 30.0