Mechanical Cam Switches

BNS 813-B03-D12-61-C-20-01-FC-S80S
Order Code: BNS057U

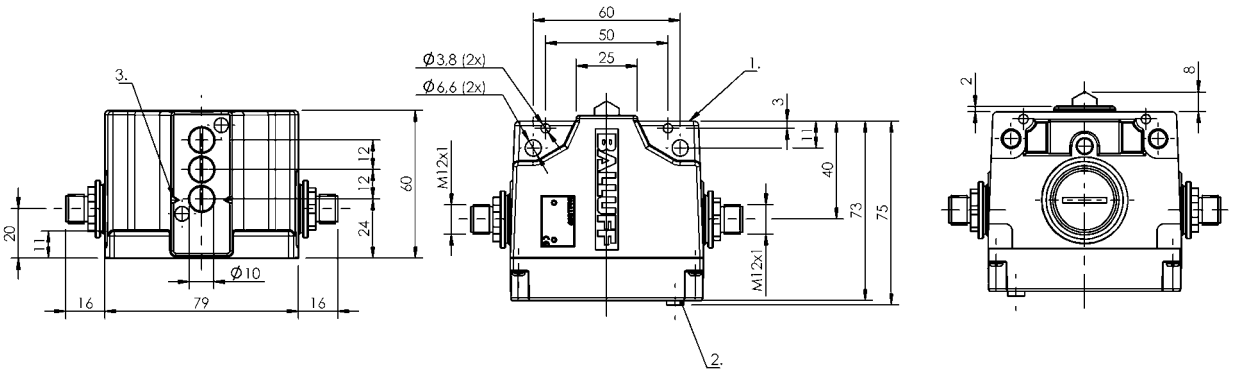

1) Reference edge, 2) Function indicator FC, 3) Mark. Safety switch position

Basic features

Approval/Conformity	CE UKCA WEEE
Basic standard	IEC 60947-5-1
Operating principle	1-3. Switch position: Mechanical
Version	Safety EN 60204-1

Display/Operation

Function indicator	1-3. Switch position: FC - 6...24 V

Electrical connection

Connection	M12x1-Flange male, 5-pin
Connection type	1. Switch position: Connector

Electrical data

Continuous current	1-3. Switch position: 4 A
Rated operating voltage Ue	1-3. Switch position: 24 V DC
Switching rate	1. Switch position: 160/min 2-3. Switch position: 300/min

Environmental conditions

Ambient temperature	-5...85 °C
IP rating	IP67

Functional safety

B10d (EN ISO 13849-1)	BSE 30.0: 30 mil. switching cycles BSE 85: 1 mil. switching cycles

Material

Housing material	Aluminium, Anodized
Housing material, surface protection	Anodized
Material contacts	1. Switch position: Silver 2-3. Switch position: Silver, gold plated
Plunger material	1-3. Switch position: 1.4034 stainless steel

Mechanical data

Approach direction	longitudinal, parallel to attachment surface
Approach speed	1-3. Switch position: 40 m/min
Distance cam - reference edge	1-3. Switch position: 4.50...5.00 mm
Flange, feed-through	None
Installation	Vertical
Life expectancy mechanical	1. Switch position: 1 mil. switching operations 2-3. Switch position: 30 mil. switching operations
Number of switching positions	3x Chisel Mechanical
Plunger style	1-3rd switch position: Chisel
Switch actuation force	1. Switch position: 30 N 2-3. Switch position: 20 N
Switching element	1. Switch position: BSE 85 2-3. Switch position: BSE 30.0

Range/Distance

Reproducibility	1. Switch position: ±0.02 mm 2-3. Switch position: ±0.002 mm

Connector Drawings

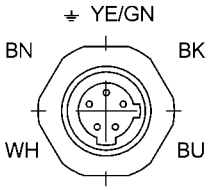

View of connector side
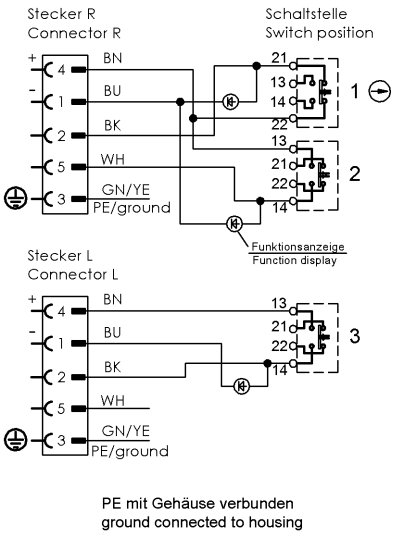
Wiring Diagrams