AbN
automation

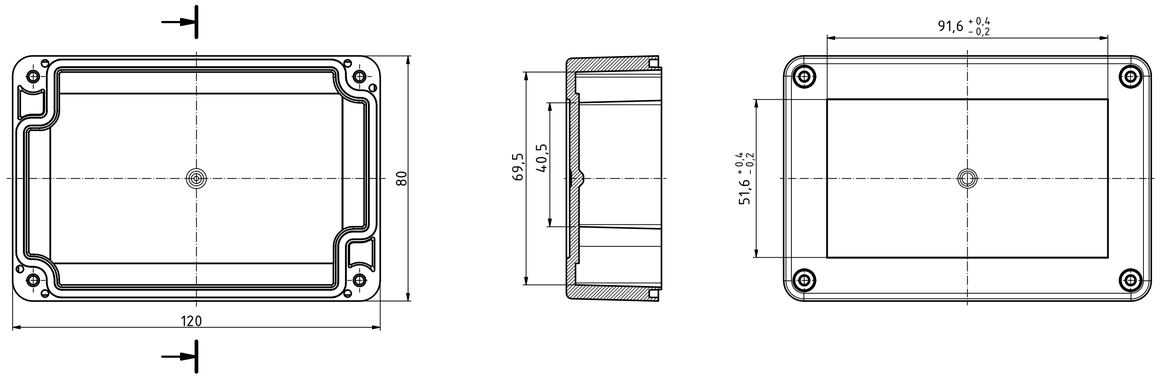

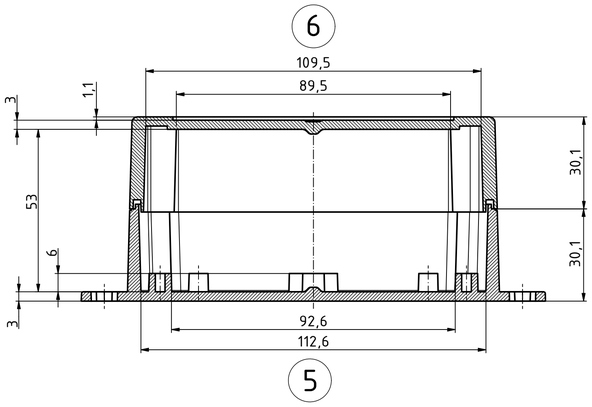

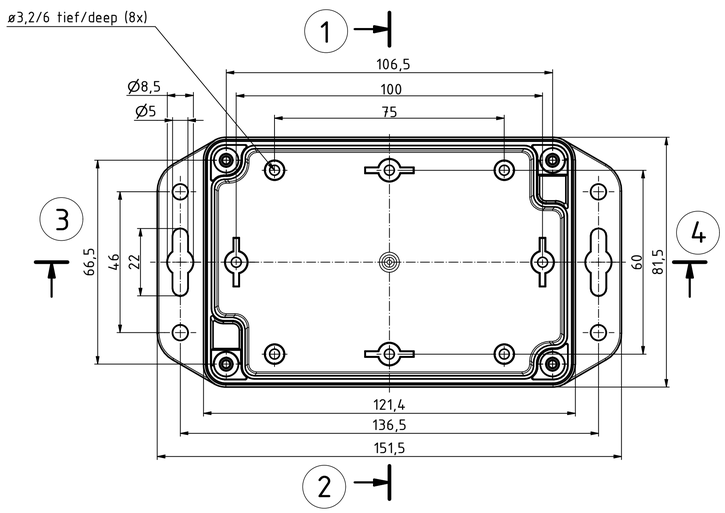

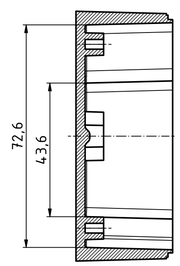

ISO (1 : 2)

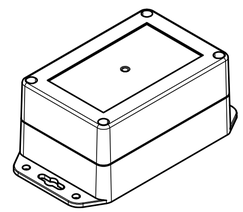

Maßstab/ *Scale:*	1:1 (1:2)
Zeichnungs-Nr. / *Drawing-No.:*	1K 5475.010.01
Artikel / *Article:*	EUROMAS XM/XT 120806 WL Katalogzg./Catalogue draw.
A.Nr./ *Art.No.:*	
Datum/ *Date:*	
DISK:	2504605.idw
Datum/*Date:*	11.03.2022 KH

BOPLA
A Phoenix Mecano Company

"Schutzvermerk nach DIN ISO 16016 beachten" *"Please pay attention to copyright note DIN ISO 16016"*