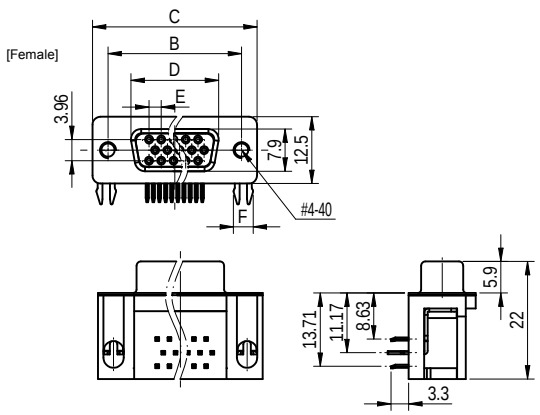

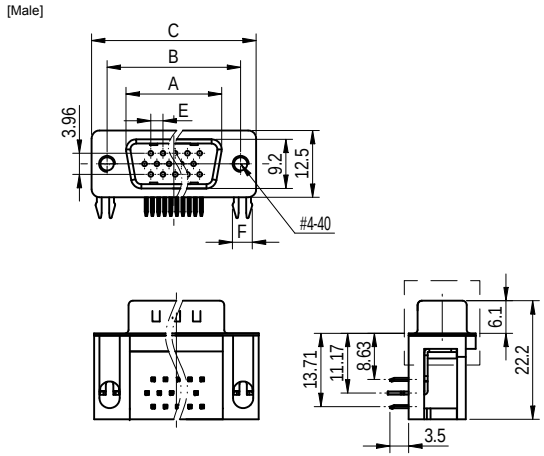

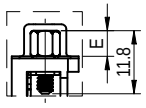

With screw type

With rivet type

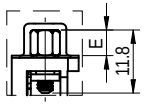

With screw and rivet type

	For female only Recommend PCB layout (Tolerance:±0.05)	For male only Recommend PCB layout (Tolerance:±0.05)
15P	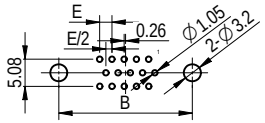	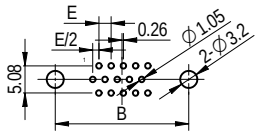
26P	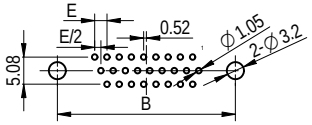	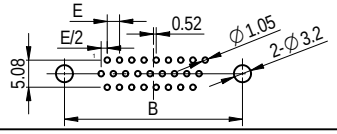
44P	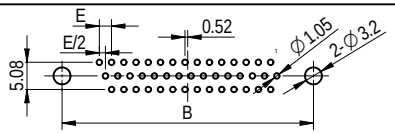	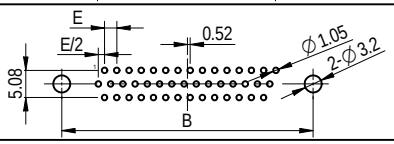
62P	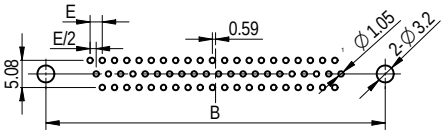	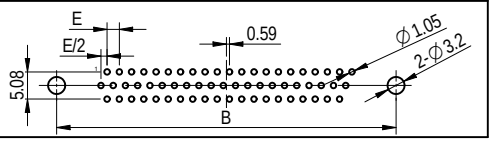

NOTES:
1. Electrical characteristics:
   1.1 Contact resistance: 20mΩ Max. Initial.
   1.2 Dielectric withstanding voltage: 500V AC(rms) for 1 minute.
   1.3 Insulation resistance: 1000MΩ Min.
2. Environment characteristics:
   2.1.Temperature range: -40°C~+105°C.
3. Materials:
   3.1 Insulator:PBT+Glass fiber
   3.2 Shell:Steel
   3.3 Contact:Copper alloy
4. Product number code:

DG1038 - X X X X X X X - XXX

- Screw materials
  F: Steel C: Copper alloy
- Board lock materials
  F: Steel C: Copper alloy
- Insulator materials
  0: PBT UL94 V-0
- Screw DIM. E
  4: 4.80mm 5: 5.80mm
- Board lock DIM. F
  7: 3.70mm
- Screw type
  A: With screw type B: With rivet type
  C: Rivet type with fixed screws
  D: Rivet type with screws in bulk package
- Contact plating
  Si: Selective gold flash
  8: Full gold flash
- Shell plating
  N: Nickel
- Color of housing
  B: Black U: Blue C: Blue(PC99)
- Connector type
  M: Male F: Female
- No. of contact
  15,26,44,62

Dimension

Position	A±0.2	B±0.2	C±0.3	D	E
15	17.90	24.99	30.84	16.33	2.29
26	26.50	33.32	39.14	24.66	2.29
44	40.00	47.04	53.04	38.38	2.29
62	56.50	63.50	69.32	54.84	2.41

(Series Image-Reference Only)

GENERAL TOLERANCE	
X.	±0.60
.X	±0.38
.XX	±0.25

REV	ECN	DESCRIPTION	DRFT	DATE
00			唐本恒	2023.07.28

DEGSON

APPD:	兰春华	2023.07.31
CHKD:	陈韶	2023.07.31
DRFT:	唐本恒	2023.07.28

A3 单位 (inch)

MATERIAL: | SURFACE/COLOR:
MAT NO./REV: / 00 | MAT STATUS: 批量

NAME: DG1038-XXXXXXXX-XXX

DRAWING NO.	TYPE	DRAWING STATUS	SCALE	SHEET
200035051	CUSTOMER DRAWING	已发布	1:1	1/1

Transfer or duplication of this document as well as the utilization or communication of Its contents are prohibited unless explicit authorization is granted. Violations will be liable for compensation. All rights reserved for patents, utility model or designs registrations. 除非得到明确授权，否则禁止将此文件的内容进行传播、复制、利用。违反者应对赔偿责任。本公司保留对专利权、实用新型或外观设计注册的所有权利。