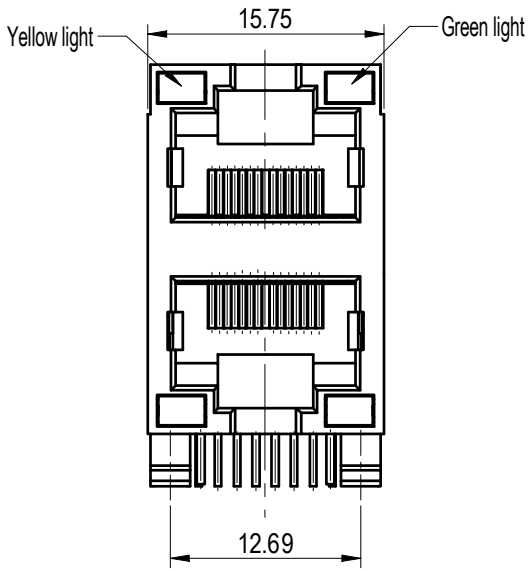

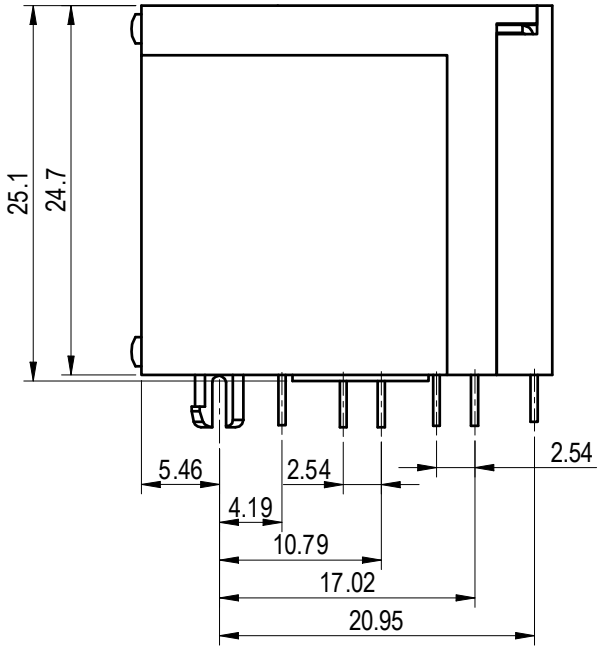

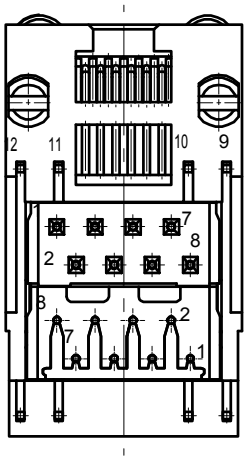

NOTES:

1. Electrical characteristics:
   1.1 Contact resistance: 30mΩ Max. Initial.
   1.2 Dielectric withstanding voltage: 500V AC(rms) for 1 minute.
   1.3 Insulation resistance: 500MΩ Min.
   1.4 Rated current: 1.5A.
2. Environment characteristics:
   2.1.Temperature range: -40°C~+85°C.
3. Materials:
   3.1 Terminal:Copper alloy Gold plating on nickel substrate.
   3.2 Rubber core:PBT, black,fire-retardant.

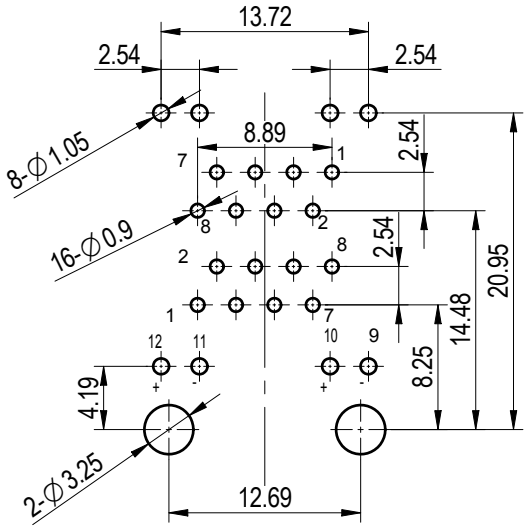

PCB LAYOUT

Transfer or duplication of this document as well as the utilization or communication of its contents are prohibited unless explicit authorization is granted. Violations will be liable for compensation. All rights reserved for patent, utility model or designs registrations. 除非经予明确授权，否则禁止转让、复制、利用、交流本文件的内容。侵犯者将负赔偿责任。本公司保留对涉及发明、实用新型和外观专利的所有权利。

GENERAL TOLERANCE	
X.	±0.60
.X	±0.38
.XX	±0.25

DEGSON

APPD:	兰春华	2023.08.14
CHKD:	陈招	2023.08.14
DRFT:	唐本恒	2023.08.14

A4 mm (inch)

REV	ECN	DESCRIPTION	DRFT	DATE
00			唐本恒	2023.08.14

MATERIAL:		SURFACE/COLOR:		
MAT NO./REV:	/ 00	MAT STATUS: 批量		
NAME: DG1131-04-S8B0P2				
DRAWING NO.	TYPE	DRAWING STATUS	SCALE	SHEET
200035074	CUSTOMER DRAWING	已发布	2:1	1/1