AbN
automation

MITSUBISHI ELECTRIC

Programmable Controller

CC-Link System Compact Type Remote I/O Module User's Manual

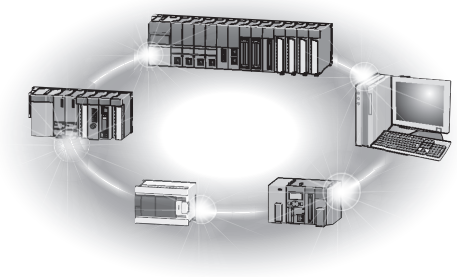

AbN
automation

• SAFETY PRECAUTIONS •

(Read these precautions before using this product.)

Before using this product, please read this manual and the relevant manuals carefully and pay full attention to safety to handle the product correctly.
The precautions given in this manual are concerned with this product. For the safety precautions of the programmable controller system, refer to the user's manual for the CPU module used.
In this manual, the safety precautions are classified into two levels: "⚠ WARNING " and "⚠ CAUTION".

⚠ WARNING	Indicates that incorrect handling may cause hazardous conditions, resulting in death or severe injury.
⚠ CAUTION	Indicates that incorrect handling may cause hazardous conditions, resulting in minor or moderate injury or property damage.

Under some circumstances, failure to observe the precautions given under "⚠CAUTION" may lead to serious consequences.
Observe the precautions of both levels because they are important for personal and system safety.

Make sure that the end users read this manual and then keep the manual in a safe place for future reference.

[Design Precautions]

⚠ WARNING

- In the case of a communication failure in the network, the status of the error station will be as follows:
  (1) All inputs from remote I/O stations are turned off.
  (2) All outputs from remote I/O stations are turned off.
  Check the communication status information and configure an interlock circuit in the sequence program to ensure that the entire system will operate safely.
  Incorrect output or malfunction due to a communication failure may result in an accident.
- Outputs may remain on or off due to a failure of a remote I/O module. Configure an external circuit for monitoring output signals that could cause a serious accident.

⚠ CAUTION

- Use the module in an environment that meets the general specifications in this manual.
  Failure to do so may result in electric shock, fire, malfunction, or damage to or deterioration of the product.
- Do not install the control lines or communication cables together with the main circuit lines or power cables. Keep a distance of 100mm or more between them. Failure to do so may result in malfunction due to noise.

A - 1

[Security Precautions]

⚠ WARNING

- To maintain the security (confidentiality, integrity, and availability) of the programmable controller and the system against unauthorized access, denial-of-service (DoS) attacks, computer viruses, and other cyberattacks from external devices via the network, take appropriate measures such as firewalls, virtual private networks (VPNs), and antivirus solutions.

[Installation Precautions]

⚠ CAUTION

- Do not directly touch any conductive parts of the module. Doing so can cause malfunction or failure of the module.
- Securely fix the module with a DIN rail or mounting screws. Tighten the screws within the specified torque range. Undertightening can cause drop of the screw, short circuit or malfunction. Overtightening can damage the screw and/or module, resulting in drop, short circuit, or malfunction.
- Securely connect the cable connectors. Poor contact may cause malfunction.

[Wiring Precautions]

⚠ WARNING

- Shut off the external power supply for the system in all phases before wiring.
  Failure to do so may result in electric shock or cause the module to fail or malfunction.

⚠ CAUTION

- Individually ground the FG terminal of the programmable controller with a ground resistance of 100Ω or less. Failure to do so may result in electric shock or malfunction.
- Tighten any unused terminal screws within the specified torque range (0.42 to 0.50N•m). Failure to do so may cause a short circuit due to contact with a solderless terminal.
- Use applicable solderless terminals and tighten them within the specified torque range. If any spade solderless terminal is used, it may be disconnected when the terminal screw comes loose, resulting in failure.
- Check the rated voltage and terminal layout before wiring to the module, and connect the cables correctly. Connecting a power supply with a different voltage rating or incorrect wiring may cause a fire or failure.
- Tighten the terminal screw within the specified torque range. Undertightening can cause short circuit, fire, or malfunction. Overtightening can damage the screw and/ or module, resulting in drop, short circuit, fire, or malfunction.
- When fixing the CC-Link dedicated cable and the power cable through the pipes for transmission or power supply line of the waterproof type remote I/O module, securely tighten the nuts with a wrench. Undertightening can cause water intrusion, resulting in failure. (AJ65SBTW□-16□ only.)

[Wiring Precautions]

⚠ CAUTION

- Tighten the communication adapter mounting screw or the waterproof cap within the specified torque range. Undertightening can cause short circuit, fire, or malfunction. Overtightening can damage the screw or the cap, resulting in short circuit or malfunction. (AJ65FBTA□-16□ only.)
- This product meets IP67 standard under the condition that the waterproof plugs, waterproof caps, and communication adapter are all installed. (AJ65FBTA□-16□ only.)
- Do not connect the cable to an incorrect connector. The I/O connector, communication connector, and power connector have the same interface. Doing so can cause malfunction or failure of the module. (AJ65FBTA□-16□ only.)
- Prevent foreign matter such as dust or wire chips from entering the module. Such foreign matter can cause a fire, failure, or malfunction.
- Place the cables in a duct or clamp them. If not, dangling cable may swing or inadvertently be pulled, resulting in damage to the module or cables or malfunction due to poor contact.
- Do not install the control lines together with the communication cables, or bring them close to each other. Failure to do so may cause malfunctions due to noise.
- When an overcurrent caused by an error of an external device or a failure of the programmable controller flows for a long time, it may cause smoke and fire. To prevent this, configure an external safety circuit, such as a fuse.
- When disconnecting the cable from the module, do not pull the cable by the cable part. For the cable with connector, hold the connector part of the cable. For the cable connected to the terminal block, loosen the terminal screw. Pulling the cable connected to the module may result in malfunction or damage to the module or cable.

A - 3

[Starting and Maintenance Precautions]

⚠ WARNING

- Do not touch any terminal while power is on. Doing so will cause electric shock or malfunction.
- Shut off the external power supply for the system in all phases before cleaning the module, retightening the terminal screws or module mounting screws, or operating the station number setting switch, transmission speed setting switch, or input response speed switch. Failure to do so may cause the module to fail or malfunction.
- Set the sink/source selector switch after shutting off the power supply at all phases. Failure to do so may result in failures or malfunctions in the opponent device.

⚠ CAUTION

- Do not disassemble or modify the modules. Doing so may cause failure, malfunction, injury, or a fire.
- Do not drop or apply strong shock to the module. Doing so may damage the module.
- Shut off the external power supply for the system in all phases before mounting or removing a module. Failure to do so may cause the module to fail or malfunction.
- After the first use of the product, do not mount/remove the terminal block to/from the module more than 50 times (compliant with IEC 61131-2 and JIS B 3502).
- Before handling the module, touch a conducting object such as a grounded metal to discharge the static electricity from the human body. Failure to do so may cause the module to fail or malfunction.

[Disposal Precautions]

⚠ CAUTION

- When disposing of this product, treat it as industrial waste.

AbN
automation

• CONDITIONS OF USE FOR THE PRODUCT •

(1) MELSEC programmable controller ("the PRODUCT") shall be used in conditions;
i) where any problem, fault or failure occurring in the PRODUCT, if any, shall not lead to any major or serious accident; and
ii) where the backup and fail-safe function are systematically or automatically provided outside of the PRODUCT for the case of any problem, fault or failure occurring in the PRODUCT.

(2) The PRODUCT has been designed and manufactured for the purpose of being used in general industries.
MITSUBISHI ELECTRIC SHALL HAVE NO RESPONSIBILITY OR LIABILITY (INCLUDING, BUT NOT LIMITED TO ANY AND ALL RESPONSIBILITY OR LIABILITY BASED ON CONTRACT, WARRANTY, TORT, PRODUCT LIABILITY) FOR ANY INJURY OR DEATH TO PERSONS OR LOSS OR DAMAGE TO PROPERTY CAUSED BY the PRODUCT THAT ARE OPERATED OR USED IN APPLICATION NOT INTENDED OR EXCLUDED BY INSTRUCTIONS, PRECAUTIONS, OR WARNING CONTAINED IN MITSUBISHI ELECTRIC USER'S, INSTRUCTION AND/OR SAFETY MANUALS, TECHNICAL BULLETINS AND GUIDELINES FOR the PRODUCT.
("Prohibited Application")
Prohibited Applications include, but not limited to, the use of the PRODUCT in;
- Nuclear Power Plants and any other power plants operated by Power companies, and/or any other cases in which the public could be affected if any problem or fault occurs in the PRODUCT.
- Railway companies or Public service purposes, and/or any other cases in which establishment of a special quality assurance system is required by the Purchaser or End User.
- Aircraft or Aerospace, Medical applications, Train equipment, transport equipment such as Elevator and Escalator, Incineration and Fuel devices, Vehicles, Manned transportation, Equipment for Recreation and Amusement, and Safety devices, handling of Nuclear or Hazardous Materials or Chemicals, Mining and Drilling, and/or other applications where there is a significant risk of injury to the public or property.

Notwithstanding the above restrictions, Mitsubishi Electric may in its sole discretion, authorize use of the PRODUCT in one or more of the Prohibited Applications, provided that the usage of the PRODUCT is limited only for the specific applications agreed to by Mitsubishi Electric and provided further that no special quality assurance or fail-safe, redundant or other safety features which exceed the general specifications of the PRODUCTs are required. For details, please contact the Mitsubishi Electric representative in your region.

(3) Mitsubishi Electric shall have no responsibility or liability for any problems involving programmable controller trouble and system trouble caused by DoS attacks, unauthorized access, computer viruses, and other cyberattacks.

A - 5

REVISIONS

* The manual number is given on the bottom left of the back cover.

Revision Date	* Manual Number	Description
June 1998	SH(NA)-4007-A	First edition
Nov. 1998	SH(NA)-4007-B	Additional model AJ65SBTB1-8D, AJ65SBTC4-16D, AJ65SBTW4-16D, AJ65SBTB1-8T, AJ65SBTC4-16DT, AJ65SBTW4-16DT Addition Section 7.3, 7.4 Correction Section 1.1, 1.2, 1.4, Chapter 2, 4, 5, 6, Section 7.1, Appendix 1
Apr. 1999	SH(NA)-4007-C	Addition Contents, Section 8.2.2
June 1999	SH(NA)-4007-D	Additional model AJ65SBTB1-32T1, AJ65SBTCF1-32D, AJ65SBTCF1-32T, AJ65SBTCF1-32DT
Nov. 1999	SH(NA)-4007-E	Addition Section 1.4, 4.1.6, 4.1.7, 4.4, 5.1.8, 5.1.9, 5.1.10, 5.1.11, 5.3, 6.1, 6.4, 7.4, Appendix 1.6, 1.7, 1.8 Correction Section 1.1, 1.2, 1.3, 1.5, 1.6, Chapter 2, Chapter 3, Section 4.2.1, 4.3.1, 6.2.1, 6.3.1, Section 7.1, 7.4, 8.2.1, Appendix 1 Additional model AJ65SBTB1-32DT, AJ65SBTCF1-32D, AJ65SBTCF1-32T, AJ65SBTCF1-32DT, AJ65SBTB2-8A, AJ65SBTB2-16A, AJ65SBTB2-8R, AJ65SBTB2-16R, AJ65SBTB2-8S, AJ65SBTB2-16S
Dec. 1999	SH(NA)-4007-F	Addition Section 1.2, 4.1.6, 4.1.7, 5.1.8, 5.1.9, 5.1.10, 5.1.11
Mar. 2000	SH(NA)-4007-G	Additional model AJ65SBTB2N-8A, AJ65SBTB2N-16A, AJ65SBTB3-8D, AJ65SBTB3-16D, AJ65SBTB2-8T, AJ65SBTB2-16T, AJ65SBTB2N-8R, AJ65SBTB-16R, AJ65SBTB2N-8S, AJ65SBTB2N-16S, AJ65SBTB32-8DT, AJ65SBTB32-16DT, AJ65SBTB1-16DT, AJ65SBTB1-16DT1, AJ65SBTB1-32DT1 Addition Section 4.1.8, 4.1.9, 4.1.10, 4.1.11, Section 5.1.12, 5.1.13, 5.1.14, 5.1.15, 5.1.16, 5.1.17, Section 6.1.1, 6.1.3, 6.1.4, 6.1.5, 6.1.6, Appendix 1.9, 1.10
Oct. 2000	SH(NA)-4007-H	Additional model AJ65VBTCU3-8D1, AJ65VBTCU3-16D1, AJ65VBTCU2-8T, AJ65VBTCU2-16T, AJ65VBTCF1-32DT1 Addition Section 4.5, 5.4, 6.5, 7.2.3, 7.2.4, Appendix 1.13 Correction Section 1.1, 1.4, 1.5, Chapter 2, Section 4.3.1, 7.1 Deletion AJ65SBTB2-8A, AJ65SBTB2-16A, AJ65SBTB2-8R, AJ65SBTB2-16R, AJ65SBTB2-8S, AJ65SBTB2-16S

A - 6

AbN
automation

Revision Date	* Manual Number	Description
Jan. 2001	SH(NA)-4007-I	[Additional model] AJ65FBTA4-16D, AJ65FBTA4-16DE, AJ65FBTA42-16DT, AJ65FBTA42-16DTE [Addition] Section 1.6, 7.4, Appendix 1.14 [Correction] Section 1.2, 1.4, 1.5, Chapter 2,3, Section 4.5.2, 5.3.1, 5.4.1, 5.4.2, 6.5.1, 7.1, Appendix 1.13
Jul. 2001	SH(NA)-4007-J	[Additional model] AJ65FBTA2-16T, AJ65FBTA2-16TE [Correction] Section 1.2, 1.4, 1.5, 4.1.6, 4.1.7, 4.2.1, 4.2.2, 4.3.1, 6.2.1, 6.2.2, 6.3.1, 6.5.1, 6.6.1, 6.6.2, 7.2.3, Appendix 1.14
Sep. 2001	SH(NA)-4007-K	[Additional model] AJ65SBTB1-16DT2, AJ65SBTB1-32DT2 [Correction] Section 1.4, 6.1.1, 8.2.1, Appendix 1.13
Jan. 2002	SH(NA)-4007-L	[Additional model] AJ65SBTB1-8T1, AJ65SBTB2-8T1, AJ65SBTB2-16T1, AJ65SBTC1-32T1, AJ65SBTB1-16DT3, AJ65SBTB1-32DT3, AJ65SBTB32-8DT2, AJ65SBTB32-16DT2, AJ65SBTC4-16DT2, AJ65SBTC1-32DT2, AJ65SBTC1-32DT3 [Correction] Section 1.3, 1.4, 1.5, 5.5.2, 6.1.1, 7.7, 8.2.1, Appendix 1.13 [Changed item numbers] Section 5.1.4 to Section 5.1.9 → Section 5.1.5 to Section 5.1.10 Section 5.1.10 to Section 5.1.13 → Section 5.1.13 to Section 5.1.16 Section 6.1.5 to Section 6.1.6 → Section 6.1.9 to Section 6.1.10 Section 6.2.2 to Section 6.2.3 → Section 6.2.3 to Section 6.2.4
Dec. 2002	SH(NA)-4007-M	[Correction] Section 2, Section 4 to Section 6, Section 8.2.1
May 2003	SH(NA)-4007-N	[Correction] Section 1.3, 1.6
Jun. 2004	SH(NA)-4007-O	[Additional model] AJ65VBTS3-16D, AJ65VBTS3-32D, AJ65VBTS2-16T, AJ65VBTS2-32T, AJ65VBTS32-16DT, AJ65VBTS32-32DT, AJ65VBTCE3-8D, AJ65VBTCE3-16D, AJ65VBTCE2-8T, AJ65VBTCE2-16T, AJ65VBTCE32-16DT [Addition] Section 1.6.1 to 1.6.3, 4.5.3 to 4.5.5, 5.4.3 to 5.4.5, 6.5.2 to 6.5.4, 7.8, 7.9 Appendix 1.15, 1.16 [Correction] Chapter 1, 2, Section 4.4.1, 4.5, 5.1, 5.4, 6.1, 6.5, 6.2.2, 6.4.1, 6.5.1, 7.2 to 7.4
Oct. 2004	SH(NA)-4007-P	[Correction] Section 1.1, 1.3 to 1.5, Chapter 2, 3, 4 to 6, Section 7.1, 7.4.2, 7.6, 7.7, 7.9.2, APPENDIX

A - 7

Revision Date	* Manual Number	Description
May 2005	SH(NA)-4007-Q	Additional model AJ65VBTCE3-32D, AJ65SBTC4-16DN, AJ65SBTC4-16DE, AJ65VBTCE32-32DT Addition Section 4.3.3, 4.4.3, 4.4.4, 6.3.2 Correction SAFETY PRECAUTION, About Manuals, Compliance with the EMC and Low Voltage Directives, Section 1.1, 1.2, 1.4, 1.5, Chapter 2, Chapter 4 to 6, Section 7.1, 7.5, 7.7, 7.8.2, 7.9.2, Appendix 1.1, 1.2, 1.4, 1.5 to 1.10, 1.14 Changed item numbers The order of section numbers has been changed in Chapters 4 through 6
Sep. 2005	SH(NA)-4007-R	Correction Chapter 4, through 6 have been changed for the external connection diagrams
Sep. 2006	SH(NA)-4007-S	Additional model AJ65SBTB1B-16TE1, AJ65SBTB1-32TE1, AJ65SBTB1-32DTE1 Addition Section 5.1.13, 5.1.14, 6.1.13 Correction SAFETY PRECAUTION, Section 1.2, 1.4, Chapter 2, Section 7.1, 8.2.1, 8.2.2, Appendix 1.8 F.G symbol is generally revised. Changed item numbers Section 5.1.13 → Section 5.1.15 Section 5.1.14 → Section 5.1.16 Section 5.1.15 → Section 5.1.17 Section 5.1.16 → Section 5.1.18
Jan. 2007	SH(NA)-4007-T	Additional model AJ65SBTB3-16D5, AJ65SBTB1-32D5 Addition Section 4.1.8, 4.1.11 Correction Section 1.2, 1.4, Chapter 2, Section 5.1.17, 5.1.18, 8.2.2 Chapter 4 to 6 have been changed for specifications and external connection diagrams. Changed item numbers Section 4.1.8 → Section 4.1.9 Section 4.1.9 → Section 4.1.10

A - 8

Revision Date	* Manual Number	Description
Mar. 2007	SH(NA)-4007-U	Additional model AJ65DBTB1-32D, AJ65DBTB1-32T1, AJ65DBTB1-32R, AJ65DBTB1-32DT1, AJ65DBTB1-32DR Addition Section 4.1.12, 5.1.19, 5.1.20, 6.1.14, 6.1.15, 7.10, 7.10.1, 7.10.2, 7.10.3, 7.10.4, 7.11, Appendix 1.15 Correction Section 1.2, 1.3, 1.4, 1.5, Chapter 2, Section 4.3.1, 5.1.17, 5.1.18, 6.4.1, 6.4.2, 6.6.1, 6.6.2, 7.1
Sep. 2007	SH(NA)-4007-V	Additional model AJ65SBTB32-16DR, AJ65SBTB3-16KD, AJ65SBTB1-32KD, AJ65SBTB32-16KDT2, AJ65SBTB32-16KDT8, AJ65SBTB1-32KDT2, AJ65SBTB1-32KDT8 Addition Section 4.1.8, 4.1.11, 6.1.9, 6.1.10, 6.1.11, 6.1.15, 6.1.17, Appendix 1.16 Correction Section 1.2, 1.3, 1.4, Chapter 2, Section 6.6.3, 7.1 Changed item numbers Section 4.1.8 → Section 4.1.9 Section 4.1.9 → Section 4.1.10 Section 4.1.10 → Section 4.1.12 Section 4.1.11 → Section 4.1.13 Section 4.1.12 → Section 4.1.14 Section 6.1.9 → Section 6.1.12 Section 6.1.10 → Section 6.1.13 Section 6.1.11 → Section 6.1.14 Section 6.1.12 → Section 6.1.16 Section 6.1.13 → Section 6.1.18 Section 6.1.14 → Section 6.1.19 Section 6.1.15 → Section 6.1.20
Oct. 2007	SH(NA)-4007-W	Additional model AJ65SBTB32-16KDR Addition Section 6.1.12 Correction Section 1.2, 1.4, Chapter 2 Changed item numbers Section 6.1.12 → Section 6.1.13 Section 6.1.13 → Section 6.1.14 Section 6.1.14 → Section 6.1.15 Section 6.1.15 → Section 6.1.16 Section 6.1.16 → Section 6.1.17 Section 6.1.17 → Section 6.1.18 Section 6.1.19 → Section 6.1.20 Section 6.1.20 → Section 6.1.21

Revision Date	* Manual Number	Description
Oct. 2008	SH(NA)-4007-X	Additional model AJ65VBTCFJ1-32DT1 Addition Section 1.3.1, 1.3.2, 1.3.3, 1.3.4, 1.3.5, 4.4.1, 4.4.5, 5.2.1, 5.2.2, 5.3.1, 5.3.1, 6.5.3 Correction Section 1.3
Jan. 2010	SH(NA)-4007-Y	This manual was revised in accordance with IEC 60617. Additional model AJ65VBTCE3-16DE, AJ65VBTCE3-32DE Addition SAFETY PRECAUTION, Section 1.3.1, 1.4, 1.6.2, 1.7, 4.3.2, 4.3.3, 7.1, 7.2.3, 7.2.4, 7.5, 7.7 Correction CONDITIONS OF USE FOR THE PRODUCT, Section 4.3.4, 4.3.5
Mar. 2011	SH(NA)-4007-Z	This manual was revised in accordance.
Dec. 2011	SH(NA)-4007-AA	Additional model AJ65VBTCE3-16TE, AJ65VBTCE3-16DTE, AJ65VBTCE3-32DTE Addition Section 5.3.3, 6.3.2, 6.3.4 Correction Chapter 3, Section 1.3.1 to 1.3.3, 1.4, 1.5, 4.6.3, 5.1.19, 6.1.1, 6.1.2, 6.1.7 to 6.1.12, 6.1.20, 6.2.1, 6.2.2, 6.3.1, 6.3.3, 6.4.1, 6.4.2, 6.6.1 to 6.6.3, 7.1, 7.2.2, 7.8.2, 8.1 Changed item numbers Section 6.3.2 → Section 6.3.3
Jun. 2012	SH(NA)-4007-AB	Addition Appendix 2 Correction ABOUT MANUALS, COMPLIANCE WITH EMC AND LOW VOLTAGE DIRECTIVES, Chapter 2, 3, Section 1.5, 1.6.2, 6.5.3, 7.2.1, 7.6, 7.7, 8.2.1, Appendix 1.11
Nov. 2012	SH(NA)-4007-AC	Correction Section 4.6.1, 4.6.2, 5.5.1, 5.6.1, 5.6.2, 6.2.2, 6.5.2, 6.6.1, 6.6.2
Jun. 2013	SH(NA)-4007-AD	Correction Section 8.2.1, 8.2.2
Dec. 2013	SH(NA)-4007-AE	Correction Section 4.1.1 to 4.1.14, 4.4.3, 4.4.4, 4.4.6, 4.4.7, 4.5.1, 5.1.1 to 5.1.20, 5.4.3, 5.4.4, 5.5.1, 6.1.1 to 6.1.21, 6.4.1 to 6.4.6, 6.5.1 to 6.5.3

AbN
automation

Revision Date	* Manual Number	Description
Oct. 2014	SH(NA)-4007-AF	Correction About Manuals, Section 1.3.2, 1.6.2, 1.7, Chapter 2, 4, 5, 6, Section 7.2.1, 7.2.6, 7.5, 7.7, 7.8.2, Appendix 1, 2
Mar. 2017	SH(NA)-4007-AG	Correction Section 1.3.2
Jul. 2018	SH(NA)-4007-AH	Correction Section 1.3.2, 1.5, 4.2.1, 4.2.2, 4.4.2, 4.6.3, 5.1.11, 5.1.12, 5.1.14, 5.2.1, 5.2.2, 5.6.2, 6.1.19, 6.2.1, 6.2.2, 6.6.2, 6.6.3, 7.1, 7.6, 7.8.2, 8.2.2, Appendix 1.13
Jul. 2022	SH(NA)-4007-AI	Correction CONDITIONS OF USE FOR THE PRODUCT, Section 1.3.3, 1.5, 1.6.1, 7.2.1, 8.2.2
Dec. 2022	SH(NA)-4007-AJ	Correction Section 1.1, 1.5, 8.1, Appendix 1.8, 1.10
Mar. 2025	SH(NA)-4007-AK	Correction SAFETY PRECAUTIONS, ABOUT MANUALS, Section 1.4, 1.5, Chapter 2, Section 4.2.1, 4.2.2, 5.2.1, 5.2.2, 6.2.1, 6.2.2, 7.1, 7.5, 7.8.2

Japanese Manual Version SH-3307-AN

This manual confers no industrial property rights or any rights of any other kind, nor does it confer any patent licenses. Mitsubishi Electric Corporation cannot be held responsible for any problems involving industrial property rights which may occur as a result of using the contents noted in this manual.

© 1998 MITSUBISHI ELECTRIC CORPORATION

INTRODUCTION

Thank you for purchasing the Mitsubishi Electric MELSEC-A series programmable controllers.
Before using this product, please read this manual carefully and develop familiarity with the functions and performance of the MELSEC-A series programmable controller to handle the product correctly.
Make sure that the end users read this manual.

CONTENTS

SAFETY PRECAUTIONS ..... A- 1
CONDITIONS OF USE FOR THE PRODUCT ..... A- 5
REVISIONS ..... A- 6
INTRODUCTION A-12
CONTENTS A-12
ABOUT MANUALS A-17
COMPLIANCE WITH EMC AND LOW VOLTAGE DIRECTIVES A-17

1 OVERVIEW 1- 1 to 1-36
1.1 Features 1- 1
1.2 Identifying the Compact Remote I/O Module Type 1- 4
1.3 Precautions for use of remote I/O modules 1- 5
1.3.1 Input module 1- 5
1.3.2 Output module 1-13
1.3.3 Modules with protection functions 1-22
1.4 Specification List 1-24
1.5 Parts Sold Separately 1-32
1.6 Recommended Connection Device List 1-34
1.6.1 Recommended connection devices for low profile waterproof remote I/O module 1-34
1.6.2 Recommended connection devices for low profile sensor connector (e-CON) remote I/O module 1-35
1.7 About the Generic, Abbreviated and Technical Terms Used in This Manual 1-36

2 NAMES AND SETTINGS FOR EACH PART 2- 1 to 2-26

3 GENERAL SPECIFICATIONS 3- 1 and 3- 2

4 SPECIFICATIONS FOR INPUT MODULES 4- 1 to 4-71
4.1 Terminal Block Type Input Module 4- 1
4.1.1 AJ65SBTB2N-8A 100VAC input module 4- 1
4.1.2 AJ65SBTB2N-16A 100VAC input module 4- 3
4.1.3 AJ65SBTB1-8D 24VDC input module (positive common (sink), negative common (source) loading) 4- 5
4.1.4 AJ65SBTB3-8D 24VDC input module (positive common (sink), negative common (source) loading) 4- 6
4.1.5 AJ65SBTB1-16D 24VDC input module (positive common (sink), negative common (source) loading) 4- 7
4.1.6 AJ65SBTB1-16D1 24VDC input module (positive common (sink), negative common (source) loading) 4- 8

AbN
automation

4.1.7 AJ65SBTB3-16D 24VDC input module
(positive common (sink), negative common (source) loading) 4- 9
4.1.8 AJ65SBTB3-16KD 24VDC input module
(positive common (sink), negative common (source) loading) 4-11
4.1.9 AJ65SBTB3-16D5 5VDC input module
(positive common (sink), negative common (source) loading) 4-13
4.1.10 AJ65SBTB1-32D 24VDC input module
(positive common (sink), negative common (source) loading) 4-15
4.1.11 AJ65SBTB1-32KD 24VDC input module
(positive common (sink), negative common (source) loading) 4-17
4.1.12 AJ65SBTB1-32D1 24VDC input module
(positive common (sink), negative common (source) loading) 4-19
4.1.13 AJ65SBTB1-32D5 5VDC input module
(positive common (sink), negative common (source) loading) 4-21
4.1.14 AJ65DBTB1-32D 24VDC input module
(positive common (sink), negative common (source) loading) 4-23
4.2 Spring Clamp Terminal Block Type Input Module 4-25
4.2.1 AJ65VBTS3-16D 24VDC input module (positive common (sink type)) 4-25
4.2.2 AJ65VBTS3-32D 24VDC input module (positive common (sink type)) 4-28
4.3 Sensor Connector (e-CON) Type Input Module 4-31
4.3.1 AJ65VBTCE3-8D 24VDC input module (positive common (sink type)) 4-31
4.3.2 AJ65VBTCE3-16D 24VDC input module (positive common (sink type)) 4-34
4.3.3 AJ65VBTCE3-32D 24VDC input module (positive common (sink type)) 4-37
4.3.4 AJ65VBTCE3-16DE 24VDC input module (negative common (source type)) 4-40
4.3.5 AJ65VBTCE3-32DE 24VDC input module (negative common (source type)) 4-43
4.4 One-Touch Connector Type Input Module 4-46
4.4.1 AJ65VBTCU3-8D1 24VDC input module (positive common (sink type)) 4-46
4.4.2 AJ65SBTC4-16D 24VDC input module
(positive common (sink), negative common (source) loading) 4-49
4.4.3 AJ65SBTC4-16DN 24VDC input module (positive common (sink type)) 4-52
4.4.4 AJ65SBTC4-16DE 24VDC input module (negative common (source type)) 4-54
4.4.5 AJ65VBTCU3-16D1 24VDC input module (positive common (sink type)) 4-56
4.4.6 AJ65SBTC1-32D 24VDC input module
(positive common (sink), negative common (source) loading) 4-59
4.4.7 AJ65SBTC1-32D1 24VDC input module
(positive common (sink), negative common (source) loading) 4-61
4.5 FCN Connector Type Input Module 4-63
4.5.1 AJ65SBTCF1-32D 24VDC input module
(positive common (sink), negative common (source) loading) 4-63
4.6 Waterproof Type Input Module 4-65
4.6.1 AJ65FBTA4-16D 24VDC input module (positive common (sink type)) 4-65
4.6.2 AJ65FBTA4-16DE 24VDC input module (negative common (souce type)) 4-67
4.6.3 AJ65SBTW4-16D 24VDC input module
(positive common (sink), negative common (source) loading) 4-69

5 SPECIFICATIONS FOR OUTPUT MODULES 5- 1 to 5-72

5.1 Terminal Block Type Output Module 5- 1
5.1.1 AJ65SBTB1-8T transistor output module (sink type) 5- 1
5.1.2 AJ65SBTB1-8T1 transistor output module (sink type) 5- 3

5.1.3 AJ65SBTB2-8T transistor output module (sink type) 5- 5
5.1.4 AJ65SBTB2-8T1 transistor output module (sink type) 5- 7
5.1.5 AJ65SBTB1-16T transistor output module (sink type) 5- 9
5.1.6 AJ65SBTB1-16T1 transistor output module (sink type) 5-11
5.1.7 AJ65SBTB2-16T transistor output module (sink type) 5-13
5.1.8 AJ65SBTB2-16T1 transistor output module (sink type) 5-15
5.1.9 AJ65SBTB1-32T transistor output module (sink type) 5-17
5.1.10 AJ65SBTB1-32T1 transistor output module (sink type) 5-19
5.1.11 AJ65SBTB1-8TE transistor output module (source type) 5-21
5.1.12 AJ65SBTB1-16TE transistor output module (source type) 5-23
5.1.13 AJ65SBTB1B-16TE1 transistor output module (source type) 5-25
5.1.14 AJ65SBTB1-32TE1 transistor output module (source type) 5-27
5.1.15 AJ65SBTB2N-8R contact output module 5-29
5.1.16 AJ65SBTB2N-16R contact output module 5-31
5.1.17 AJ65SBTB2N-8S triac output module 5-33
5.1.18 AJ65SBTB2N-16S triac output module 5-35
5.1.19 AJ65DBTB1-32T1 transistor output module (sink type) 5-37
5.1.20 AJ65DBTB1-32R contact output module 5-39
5.2 Spring Clamp Terminal Block Type Output Module 5-41
5.2.1 AJ65VBTS2-16T transistor output module (sink type) 5-41
5.2.2 AJ65VBTS2-32T transistor output module (sink type) 5-44
5.3 Sensor Connector (e-CON) Type Output module 5-47
5.3.1 AJ65VBTCE2-8T transistor output module (sink type) 5-47
5.3.2 AJ65VBTCE2-16T transistor output module (sink type) 5-50
5.3.3 AJ65VBTCE3-16TE transistor output module (source type) 5-53
5.4 One-Touch Connector Type Output Module 5-56
5.4.1 AJ65VBTCU2-8T transistor output module (sink type) 5-56
5.4.2 AJ65VBTCU2-16T transistor output module (sink type) 5-59
5.4.3 AJ65SBTC1-32T transistor output module (sink type) 5-62
5.4.4 AJ65SBTC1-32T1 transistor output module (sink type) 5-64
5.5 FCN Connector Type Output Module 5-66
5.5.1 AJ65SBTCF1-32T transistor output module (sink type) 5-66
5.6 Waterproof Type Output Module 5-68
5.6.1 AJ65FBTA2-16T transistor output module (sink type) 5-68
5.6.2 AJ65FBTA2-16TE transistor output module (source type) 5-70

6 SPECIFICATIONS FOR COMBINED MODULES 6- 1 to 6-87

6.1 Terminal Block Type Combined Module 6- 1
6.1.1 AJ65SBTB32-8DT combined module 6- 1
6.1.2 AJ65SBTB32-8DT2 combined module 6- 3
6.1.3 AJ65SBTB1-16DT combined module 6- 5
6.1.4 AJ65SBTB1-16DT1 combined module 6- 7
6.1.5 AJ65SBTB1-16DT2 combined module 6- 9
6.1.6 AJ65SBTB1-16DT3 combined module 6-11
6.1.7 AJ65SBTB32-16DT combined module 6-13
6.1.8 AJ65SBTB32-16DT2 combined module 6-15
6.1.9 AJ65SBTB32-16KDT2 combined module 6-17
6.1.10 AJ65SBTB32-16KDT8 combined module 6-19
6.1.11 AJ65SBTB32-16DR combined module 6-21

AbN
automation

6.1.12 AJ65SBTB32-16KDR combined module 6-23
6.1.13 AJ65SBTB1-32DT combined module 6-25
6.1.14 AJ65SBTB1-32DT1 combined module 6-27
6.1.15 AJ65SBTB1-32DT2 combined module 6-29
6.1.16 AJ65SBTB1-32KDT2 combined module 6-31
6.1.17 AJ65SBTB1-32DT3 combined module 6-33
6.1.18 AJ65SBTB1-32KDT8 combined module 6-35
6.1.19 AJ65SBTB1-32DTE1 combined module 6-37
6.1.20 AJ65DBTB1-32DT1 combined module 6-39
6.1.21 AJ65DBTB1-32DR combined module 6-41
6.2 Spring Clamp Terminal Block Type Combined Module 6-43
6.2.1 AJ65VBTS32-16DT combined module 6-43
6.2.2 AJ65VBTS32-32DT combined module 6-46
6.3 Sensor Connector (e-CON) Type Combined Module 6-49
6.3.1 AJ65VBTCE32-16DT combined module 6-49
6.3.2 AJ65VBTCE3-16DTE combined module 6-52
6.3.3 AJ65VBTCE32-32DT combined module 6-55
6.3.4 AJ65VBTCE3-32DTE combined module 6-58
6.4 One-Touch Connector Type Combined Module 6-61
6.4.1 AJ65SBTC4-16DT combined module 6-61
6.4.2 AJ65SBTC4-16DT2 combined module 6-63
6.4.3 AJ65SBTC1-32DT combined module 6-65
6.4.4 AJ65SBTC1-32DT1 combined module 6-67
6.4.5 AJ65SBTC1-32DT2 combined module 6-69
6.4.6 AJ65SBTC1-32DT3 combined module 6-71
6.5 FCN Connector Type Combined Module 6-73
6.5.1 AJ65SBTCF1-32DT combined module 6-73
6.5.2 AJ65VBTCF1-32DT1 combined module 6-75
6.5.3 AJ65VBTCFJ1-32DT1 combined module 6-78
6.6 Waterproof Type Combined Module 6-81
6.6.1 AJ65FBTA42-16DT combined module 6-81
6.6.2 AJ65FBTA42-16DTE combined module 6-83
6.6.3 AJ65SBTW4-16DT combined module 6-85

7 HANDLING OF COMPACT REMOTE I/O MODULES 7- 1 to 7-44
7.1 Handling and Installation Precautions 7- 1
7.2 Wiring Procedures for One-touch Connector Plugs 7-10
7.2.1 List of one-touch connector plugs 7-10
7.2.2 Precautions for transition wiring of one-touch connector for power supply and FG 7-11
7.2.3 Wiring procedures for the one-touch connector 7-12
7.2.4 Wiring procedures for the one-touch connector for communication 7-14
7.2.5 Wiring procedures for the one-touch connector for power supply and FG 7-16
7.3 Handling of the Waterproof-type Remote I/O Module 7-18
7.3.1 List of dustproof and waterproof caps 7-18
7.3.2 Waterproof plug attachment procedure 7-18
7.3.3 Wiring procedure for the terminal block 7-19
7.4 Handling of the Low Profile Waterproof Type Remote I/O Module 7-20
7.4.1 List of waterproof caps 7-20
7.4.2 Waterproof cap installation method 7-20

7.5 Connectors and Tools Used for Connecting the FCN Connector Cables 7-21
7.6 Attaching and Removing the Protective Cover for the Compact Remote I/O Module 7-22
7.7 Connection Method of CC-Link Dedicated Cable 7-29
7.8 Handling of Spring Clamp Terminal Block Type Remote I/O Module 7-33
7.8.1 Installation and removal of the spring clamp terminal block 7-33
7.8.2 Procedure for wiring the spring clamp terminal block 7-34
7.9 Attaching Mounting Brackets to the Module 7-36
7.9.1 Attachment of mounting brackets 7-36
7.9.2 Precautions for attaching mounting brackets 7-37
7.10 Mounting the DIN Rail Adapter 7-39
7.10.1 Specifications 7-39
7.10.2 Handling precautions 7-39
7.10.3 Attaching the DIN rail adapter to the module 7-39
7.10.4 Mounting the module to a DIN rail 7-40
7.11 Common Terminal Block 7-42

8 TROUBLESHOOTING 8- 1 to 8-11

8.1 Verifying Errors from LED Status 8- 1
8.2 Examples of Errors for Compact Remote I/O Modules 8- 3
8.2.1 Errors occurring in the input circuit and corrective actions 8- 3
8.2.2 Errors occurring in the output circuit and corrective action 8- 5

APPENDICES App- 1 to App-28

Appendix 1 External Dimensions App-1
Appendix 1.1 AJ65SBTB1-8□ remote I/O module App-1
Appendix 1.2 AJ65SBTB1-16□ remote I/O module App-2
Appendix 1.3 AJ65SBTW4-16□ remote I/O module App-4
Appendix 1.4 AJ65SBTB1-32□ remote I/O module App-5
Appendix 1.5 AJ65SBTC1-32□, and AJ65SBTC4-16□ remote I/O module App-7
Appendix 1.6 AJ65SBTCF1-32□ remote I/O module App-9
Appendix 1.7 AJ65SBTB2-8□, AJ65SBTB3-8□, and AJ65SBTB32-8□ remote I/O module App-10
Appendix 1.8 AJ65SBTB1B-16□,AJ65SBTB2-16□, AJ65SBTB3-16□, and AJ65SBTB32-16□ remote I/O module App-11
Appendix 1.9 AJ65SBTB2N-8□ remote I/O module App-12
Appendix 1.10 AJ65SBTB2N-16□ remote I/O module App-13
Appendix 1.11 AJ65VBTCU□-8□, AJ65VBTCU□-16□, and AJ65VBTCF1-32□ remote I/O module App-14
Appendix 1.12 AJ65FBTA□-16□ remote I/O module App-17
Appendix 1.13 AJ65VBTS□-16□, and AJ65VBTS□-32□ remote I/O module App-18
Appendix 1.14 AJ65VBTCE□-8□, AJ65VBTCE□-16□, and AJ65VBTCE□-32□ remote I/O module App-20
Appendix 1.15 AJ65DBTB1-32 □ remote I/O module App-25
Appendix 1.16 AJ65SBTB1-32K□, AJ65SBTB3-16KD, and AJ65SBTB32-16K□ remote I/O module App-26
Appendix 2 CC-Link Versions App-27

AbN
automation

ABOUT MANUALS

The following manuals are also related to this product.

Relevant manuals

Manual name	Manual number
CC-Link System Master/Local Module Type AJ61BT11/A1SJ61BT11 User's Manual System configuration, performance specifications, functions, handling, wiring, and troubleshooting of the AJ61BT11 and A1SJ61BT11	IB-66721
CC-Link System Master/Local Module Type AJ61QBT11/A1SJ61QBT11 User's Manual System configuration, performance specifications, functions, handling, wiring, and troubleshooting of the AJ61QBT11 and A1SJ61QBT11	IB-66722
MELSEC-Q CC-Link System Master/Local Module User's Manual System configuration, performance specifications, functions, handling, wiring, and troubleshooting of the QJ61BT11N	SH-080394E
MELSEC-L CC-Link System Master/Local Module User's Manual System configuration, performance specifications, functions, handling, wiring, and troubleshooting of the LCPU with built-in CC-Link and LJ61BT11	SH-080895ENG
MELSEC iQ-R CC-Link System Master/Local Module User's Manual (Startup) Specifications, procedures before operation, system configuration, wiring, and communication examples of the CC-Link system master/local module	SH-081269ENG
MELSEC iQ-R CC-Link System Master/Local Module User's Manual (Application) Functions, parameter settings, programming, troubleshooting, I/O signals, and buffer memory of the CC-Link system master/local module	SH-081270ENG

COMPLIANCE WITH EMC AND LOW VOLTAGE DIRECTIVES

(1) Method of ensuring compliance
To ensure that Mitsubishi Electric programmable controllers maintain EMC and Low Voltage Directives when incorporated into other machinery or equipment, certain measures may be necessary. Please refer to one of the following manuals.
・User's manual for the CPU module or head module used
・Safety Guidelines
(This manual is included with the CPU module, base unit, or head module.)
The CE mark on the side of the programmable controller indicates compliance with EMC and Low Voltage Directives.

(2) Additional measures
To ensure that this product maintains EMC and Low Voltage Directives, please refer to one of the manuals listed under (1).

1 OVERVIEW

This manual describes the specifications of the compact remote I/O module (hereinafter referred to as the "compact remote I/O module") used as the remote I/O station of the CC-Link system.

1.1 Features

The following are the features of the compact remote I/O module:

(1) The remote I/O module is reduced in size yet retains all the functions of the conventional module

The conventional remote I/O module has furthermore been reduced in size.

[External dimension (comparative example)]

Module model name	Compact remote I/O module			Conventional remote I/O module		
	AJ65SBTB1-8 □	AJ65SBTB1-16 □ AJ65SBTB2-8 □ AJ65SBTB2N-8 □ AJ65SBTC1-32 □ AJ65SBTC4-16 □ AJ65SBTCF1-32 □ AJ65SBTB3-8 □ AJ65SBTB32-8 □	AJ65SBTB1-32 □ AJ65SBTB1B-16 □ AJ65SBTB2-16 □ AJ65SBTB2N-16 □ AJ65SBTB3-16 □ AJ65SBTB32-16 □	AJ65BTB1-16 □	AJ65BTB2-16 □	AJ65BTC1-32 □
Height	50			65		
Width	87.3	118	179	151.9	197.5	165.0
Depth	40			46		

Unit :mm

(2) More models in the compact remote I/O module lineup

The compact remote I/O modules for the CC-Link system is divided into six types including terminal block type, one-touch connector type, waterproof-type, FCN connector type, spring clamp terminal block type, and sensor connector (e-CON) type.

In addition, the number of I/O points is divided into three types (8 points, 16 points, and 32 points), allowing the user to select a module that is most appropriate for the environment and objective.

(3) 4-wire compact remote I/O module featuring easy connection of a 4-wire sensor

A 4-wire sensor can be easily connected via the common pin provided on each plug without installing a relay terminal block.

For a 4-wire compact remote I/O module, one sensor is connected to each plug. Therefore, sensors can be exchanged by plug, reducing work steps.

(4) Terminal block connection provides easy connection of 2-wire and 3-wire sensors or loads

Since the terminal block connection allows connection of 2-wire and 3-wire sensors or loads, common connections are not needed and it makes connection easier.

AbN
automation

(5) Wiring work can be minimized

(a) Terminal-block module
The number of wiring steps can be dramatically reduced by adopting the use of self-tightening screws on the terminal block.

(b) One-touch connector module, connector module
The number of wiring steps can be dramatically reduced by adopting use of the pressure-displacement wire-connection method (soldering, peeling of shield and screwing not necessary).

(c) FCN connector module
The number of wiring steps can be dramatically reduced by adopting 40-pin connector for I/O part.

(d) Spring clamp terminal block module
The number of wiring steps can be dramatically reduced by adopting spring clamps (screwing not necessary).

<Terminal-block module>

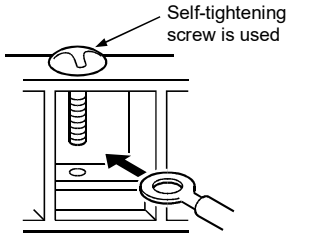

The round solderless terminal can be connected simply by loosening the screw on the terminal block.

<One-touch connector module, connector module>

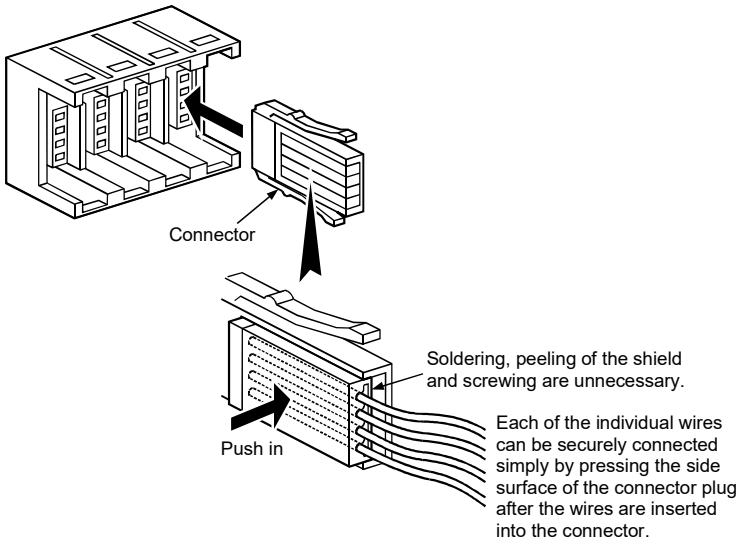

<FCN connector module>>

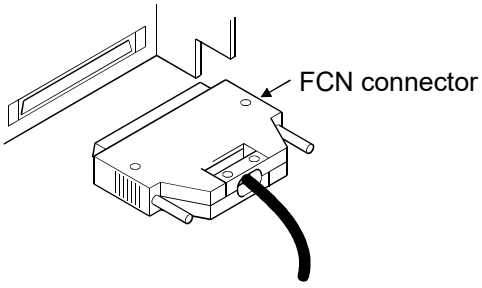

<Spring clamp terminal block type >

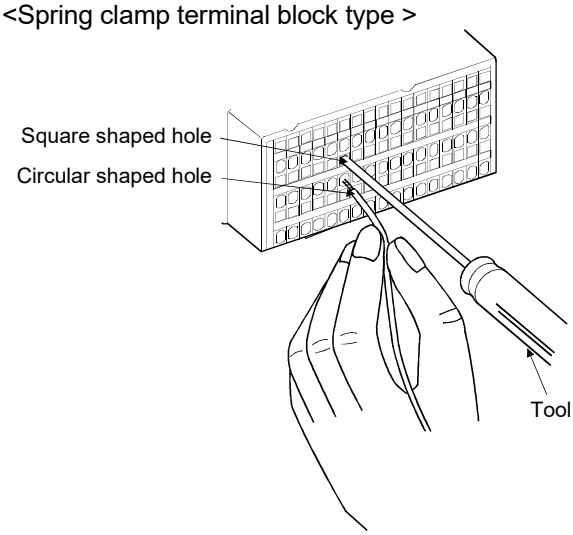

(6) Waterproof remote I/O modules with improved resistance against water and oil

The waterproof remote I/O module, low profile waterproof remote I/O module adopts a protection structure compatible with IP67, providing even safer usage in areas in which water and oil are present.

1 - 2

(7) Up to a maximum of 64 remote I/O modules can be connected

In the CC-Link system, a maximum of 64 remote I/O modules can be connected per master station.
Since each remote I/O module occupies 32 points, a maximum of 2048 link points can be set.

(8) Modules can be exchanged without stopping the CC-Link system

With the adoption of a two-piece terminal block for the CC-Link cable connection, modules may be exchanged without stopping the CC-Link system.

(9) Direct installation to the machine is feasible

The terminal-block remote I/O module may be installed directly to the machine, since the charged area is protected by a finger protector in the upper area of the terminal block.

(10) The module can be installed in six orientations

The compact remote I/O module can be installed in six different orientations. (Restrictions may apply to some installation orientations.)
The module can also be installed using the DIN rail.

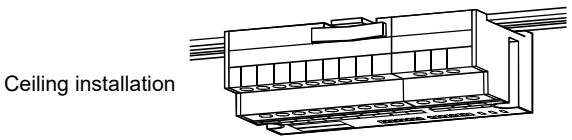

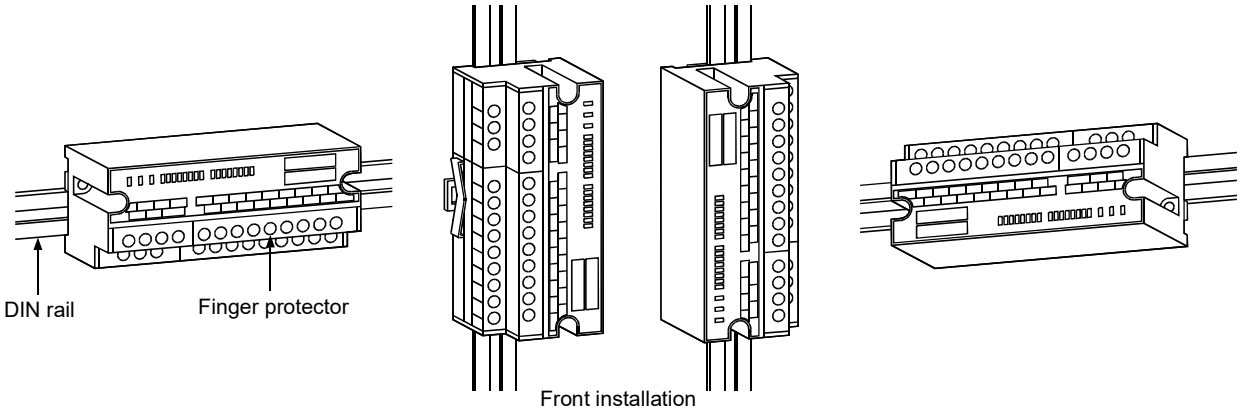

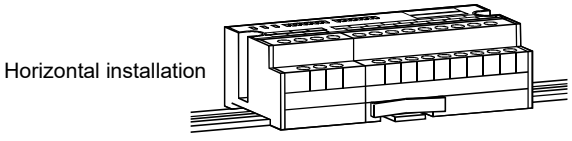

(11) Transistor output module with improved protection functions

The transistor output module is designed to achieve an even greater degree of module protection by adopting overload protection, overheat protection and overvoltage protection as standard. As a result, the programmable controller system's reliability is further improved.

AbN
automation

1.2 Identifying the Compact Remote I/O Module Type

The following shows how to identify the type of a compact remote I/O module:

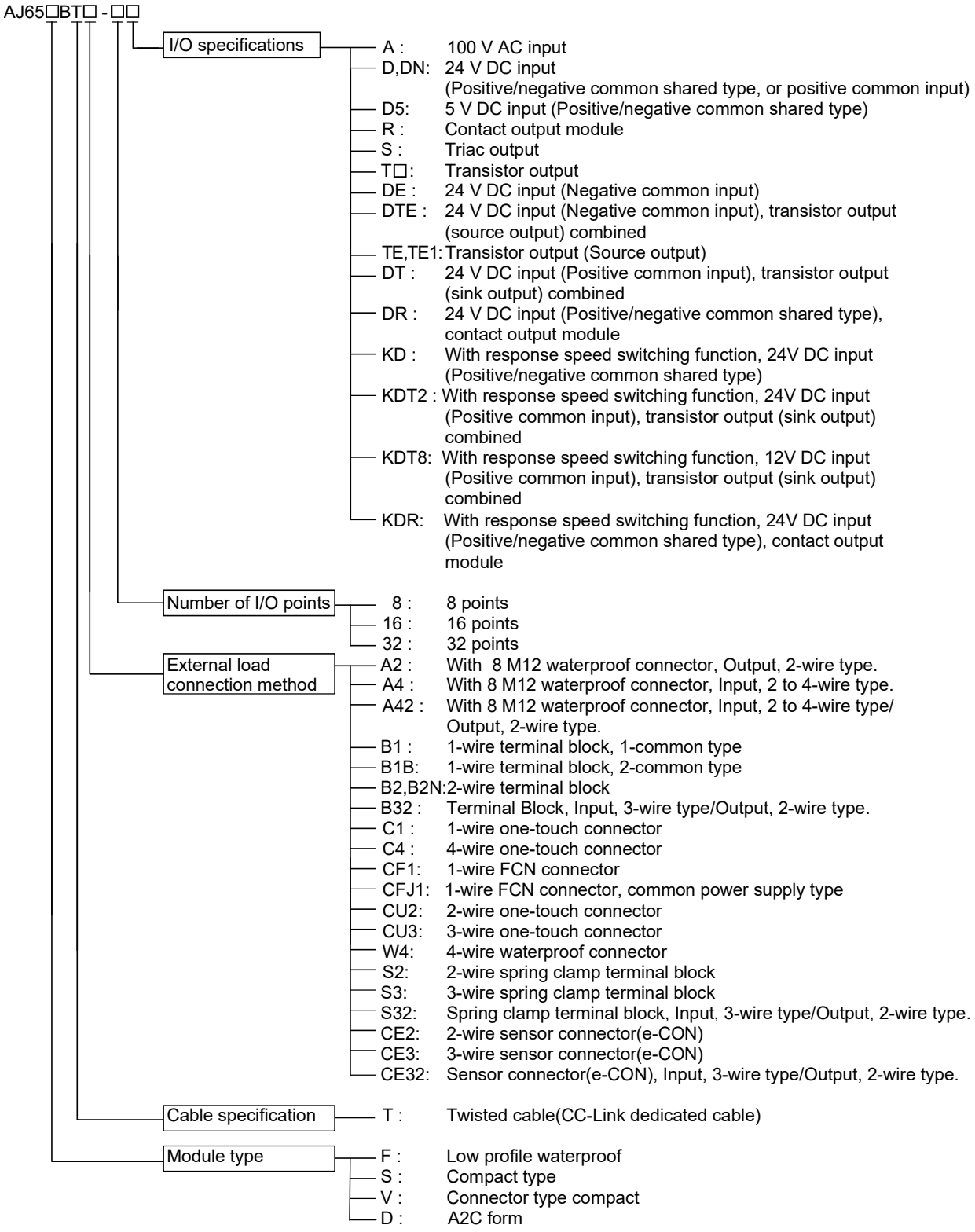

1 - 4

1.3 Precautions for use of remote I/O modules

This section describes the precautions for use of remote I/O modules applicable in the CC-Link system and their specifications.

- This is a remote I/O module designed specifically for the CC-Link system. Do not connect the module to other data-link systems, such as the MELSECNET/MINI.
- 32 points are assigned per station for a compact remote I/O module. For 16-point modules the 16 points in the second half and for 8-points module the 24 points in the second half remain empty but are not usable.
- Do not install the main circuit lines, high-voltage cables, and load cables other than those connected to the programmable controller together. If doing so, the remote I/O module (especially, AJ65SBTB1-16D1, AJ65SBTB1-32D1, AJ65VBTCU3-8D1, AJ65VBTCU3-16D1, and AJ65SBTC1-32D1) will be susceptible to noise, surge, and induction.
- When a mechanical contact, such as a relay, is connected to the AJ65SBTB1-16D1, AJ65SBTB1-32D1, AJ65VBTCU3-8D1, AJ65VBTCU3-16D1, or AJ65SBTC1-32D1, chattering may be input as a signal.

1.3.1 Input module

(1) Input response time and pulse width

The input module may take noise for inputs due to the signal pulse width. The pulse width of the AJ65SBTB1-32KD□, AJ65SBTB3-16KD□, or AJ65SBTB32-16KD□ is as shown in the following table depending on the response speed set by the input response speed switching switch. In case of setting the response speed, fully consider the operating environment.

Response speed setting value (ms)	Minimum value of pulse width that can take noise for inputs (ms)
0.2	0.006
1.5	0.8
5	3
10	6

When setting “0.2ms” as the response speed under an environment with noise, an input signal line (including a common line) should be 3m or less.

AbN
automation

(2) Precautions when using the DC input module

(a) Measures against back EMF

When an inductive load is connected, connect a diode to the load in parallel. Use a diode that meets the following conditions.

- Reverse breakdown voltage is equal to or more than 10 times as large as the circuit voltage.
- Forward current is equal to or more than 2 times as large as the load current.

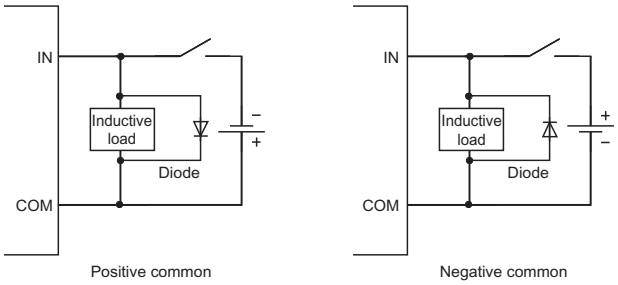

(3) Precautions when using the AJ65SBTC1-32D or AJ65SBTC1-32D1

The maximum number of simultaneous input points of the AJ65SBTC1-32D or AJ65SBTC1-32D1 varies depending on the ambient temperature. Refer to the derating curve below

Derating curve for the AJ65SBTC1-32D or AJ65SBTC1-32D1

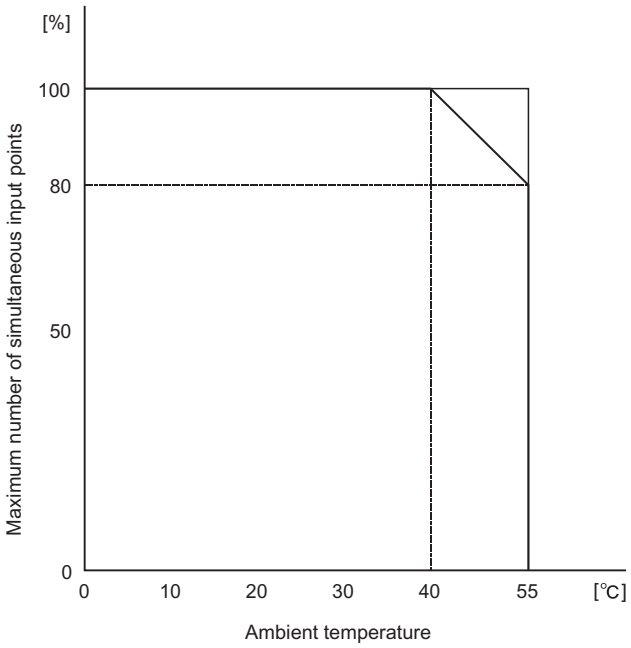

1 - 6

(4) Precautions when using the AJ65VBTCF1-32DT1
The maximum number of simultaneous input points of the AJ65VBTCF1-32DT1 changes according to the installation orientation.

1) Installation orientations without limits
When the module is mounted as shown below, the maximum number of simultaneous input points is not limited.

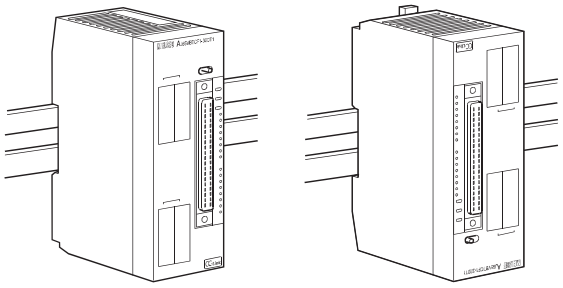

Vertical installation

2) Installation orientations with limits
When the module is mounted as shown below, the maximum number of simultaneous input points is reduced to 60% at an ambient temperature of 55°C.
(Refer to the derating curve.)

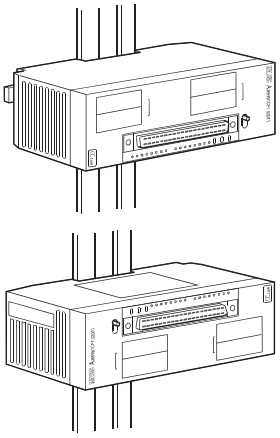

Horizontal installation

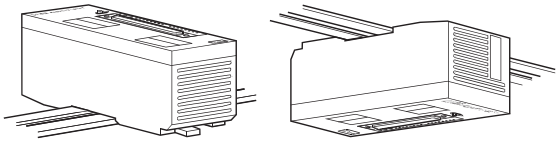

Upward installation Downward installation

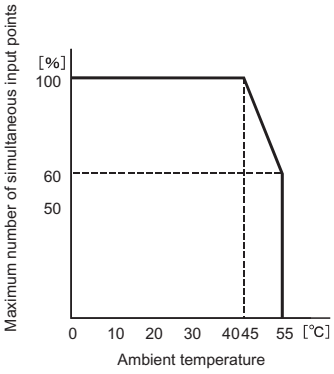

Derating curve

AbN
automation

(5) Precautions when using the AJ65VBTCFJ1-32DT1
The maximum number of simultaneous input points of the AJ65VBTCFJ1-32DT1 changes according to the installation orientation.

1) Vertical installation (basic)
When the module is mounted as shown below, the maximum number of simultaneous input points is reduced to 65% at an ambient temperature of 55°C.
(Refer to the derating curve (1).)

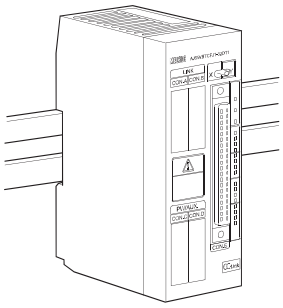

Vertical installation (basic)

2) For installations other than front installation (basic orientation)
When the module is mounted as shown below, the maximum number of simultaneous input points is reduced to 40% at an ambient temperature of 55°C.
(Refer to the derating curve (2).)

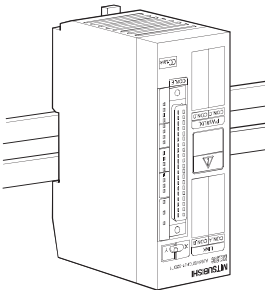

Vertical installation (upside down)

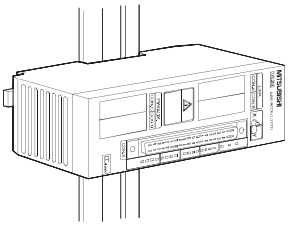

Horizontal installation

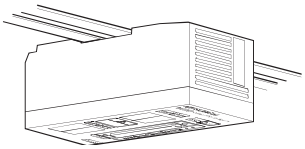

Downward installation

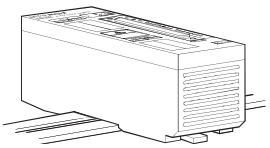

Upward installation

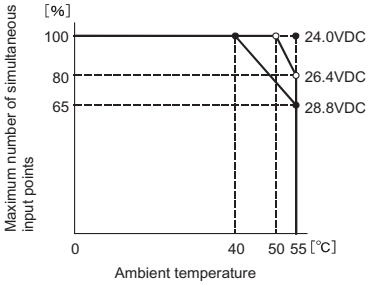

Derating curve (1)

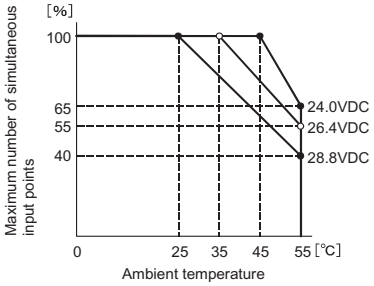

Derating curve (2)

1 - 8

(6) Precautions when using the AJ65VBTS3-16D
The maximum number of simultaneous input points of the AJ65VBTS3-16D changes according to the installation orientation.

1) Installation orientations without limits
When the module is mounted as shown below, the maximum number of simultaneous input points is not limited.

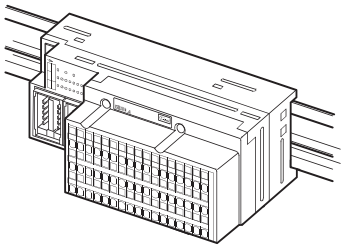

Vertical installation (basic)

2) Installation orientations with limits
When the module is mounted as shown below, the maximum number of simultaneous input points is reduced to 75% at an ambient temperature of 55°C.
(Refer to the derating curve)

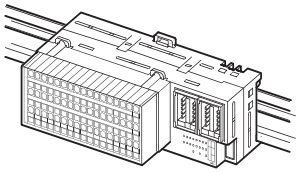

Vertical installation (upside down)

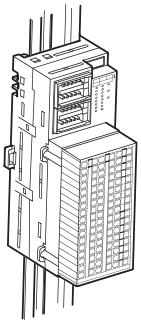

Horizontal installation (basic)

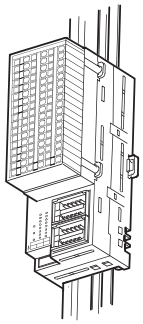

Horizontal installation (upside down)

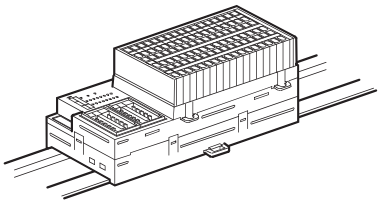

Upward installation

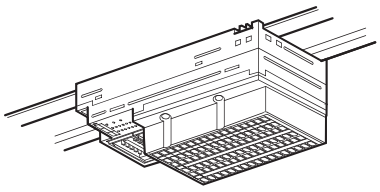

Downward installation

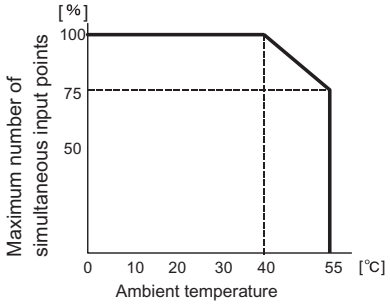

Derating curve

AbN
automation

(7) Precautions when using the AJ65VBTS3-32D or AJ65VBTS32-32DT
The maximum number of simultaneous input points of the AJ65VBTS3-32D or AJ65VBTS32-32DT changes according to the installation orientation.

1) Installation orientations without limits
When the module is mounted as shown below, the maximum number of simultaneous input points is not limited.

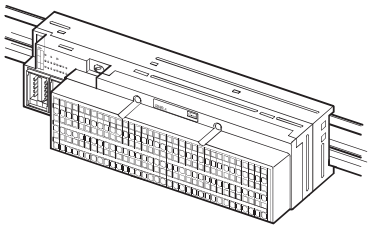

Vertical installation (basic)

2) Installation orientations with limits
When the module is mounted as shown below, the maximum number of simultaneous input points of the AJ65VBTS3-32D is reduced to 69% (11 points/common) at an ambient temperature of 55°C. (Refer to the derating curve (1).)
That of the AJ65VBTS32-32DT is reduced to 75%. (Refer to the derating curve (2).)

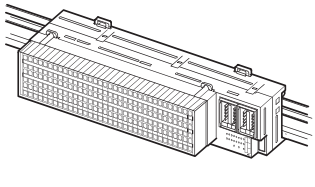

Vertical installation (upside down)

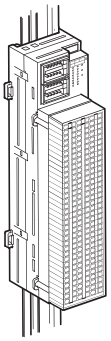

Horizontal installation (basic)

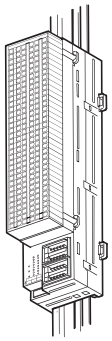

Horizontal installation (upside down)

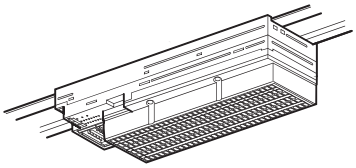

Downward installation

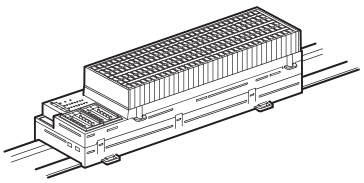

Upward installation

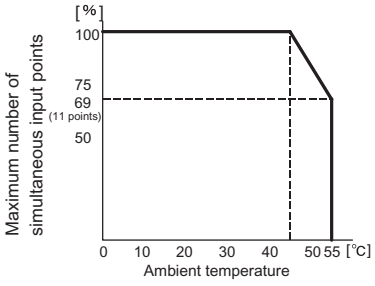

Derating curve (1)

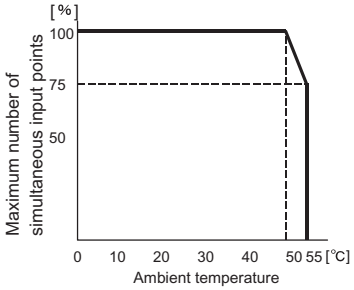

Derating curve (2)

1 - 10

(8) Precautions when using the AJ65VBTCE3-16D or AJ65VBTCE3-16DE
The maximum number of simultaneous input points of the AJ65VBTCE3-16D or AJ65VBTCE3-16DE changes according to the installation orientation.

1) Installation orientations without limits
When the module is mounted as shown below, the maximum number of simultaneous input points is not limited.

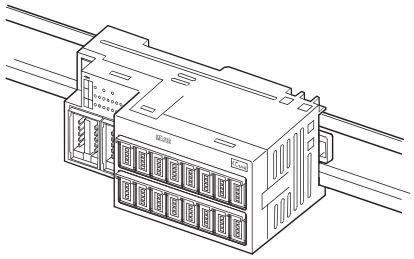

Vertical installation (basic)

2) Installation orientations with limits
When the module is mounted as shown below, the maximum number of simultaneous input points is reduced to 62.5% at an ambient temperature of 55°C.
(Refer to the derating curve.)

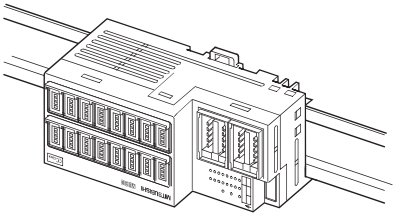

Vertical installation (upside down)

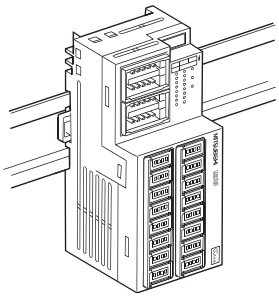

Horizontal installation (basic)

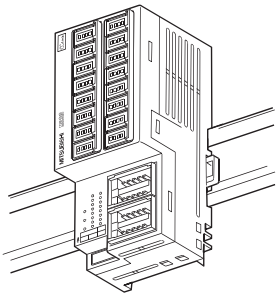

Horizontal installation (upside down)

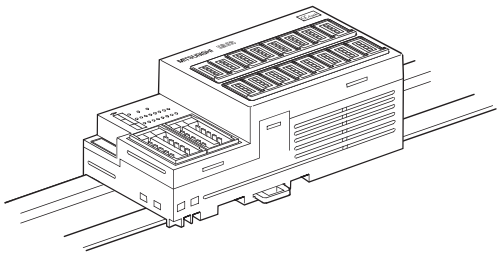

Upward installation

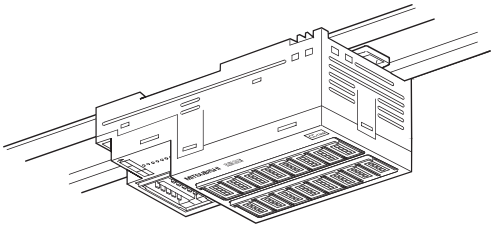

Downward installation

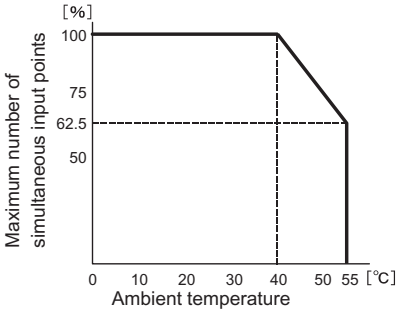

Derating curve

AbN
automation

(9) Precautions when using the AJ65VBTCE3-32D or AJ65VBTCE3-32DE
The maximum number of simultaneous input points of the AJ65VBTCE3-32D or AJ65VBTCE3-32DE changes according to the installation orientation.

1) Installation orientations without limits
When the module is mounted as shown below, the maximum number of simultaneous input points is not limited.

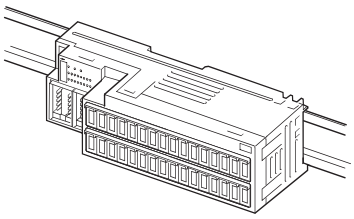

Vertical installation (basic)

2) Installation orientations with limits
When the module is mounted as shown below, the maximum number of simultaneous input points is reduced to 75% at an ambient temperature of 55°C.
(Refer to the derating curve.)

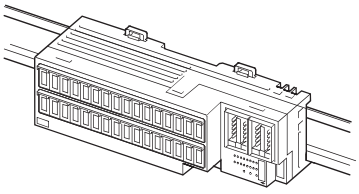

Vertical installation (upside down)

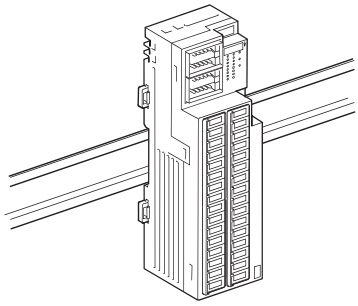

Horizontal installation (basic)

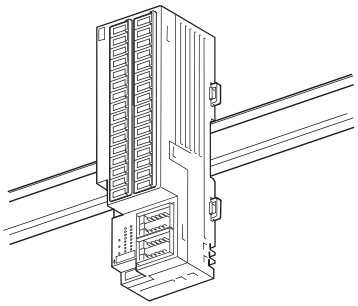

Horizontal installation (upside down)

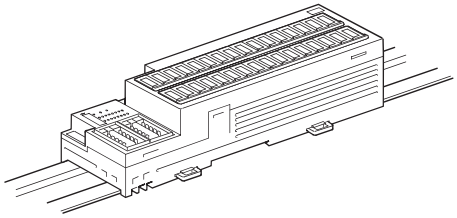

Upward installation

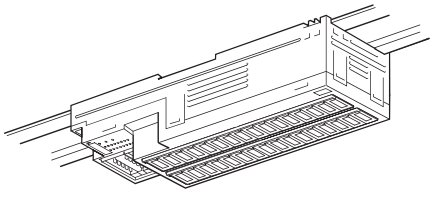

Downward installation

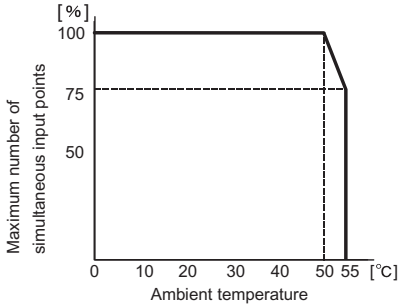

Derating curve

1 - 12

(10) Precautions when using the AJ65SBTB1-32KD or AJ65SBTB1-32KDT2
The maximum number of simultaneous input points of the AJ65SBTB1-32KD or AJ65SBTB1-32KDT2 changes according to the input voltage and ambient temperature.
If the input voltage is higher than 26.4V, the maximum number of simultaneous input points is as shown in the following figures.
(If the input voltage is 26.4V or lower, derating is not required.)

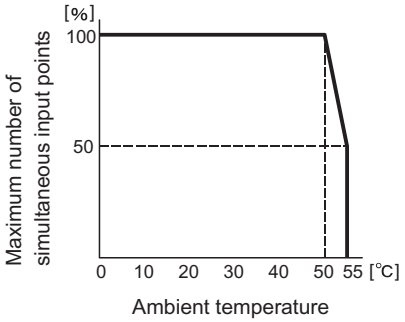

AJ65SBTB1-32KD derating curve

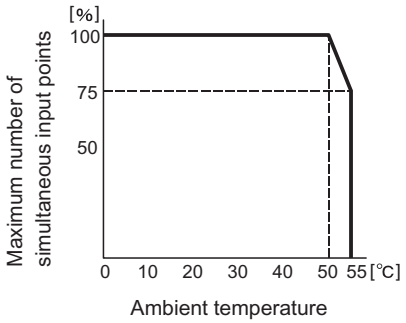

AJ65SBTB1-32KDT2 derating curve

(11) Precautions when using a 3-wire or 4-wire module
When supplying power from a 3-wire or 4-wire module to an external device, such as a sensor, total current must be equal to or less than the value of "supply current for connected device" specified for the module.

1.3.2 Output module

(1) Maximum switching frequency when the module drives inductive load
The output must be on for one second or longer and off for one second or longer.

(2) Load for connection
When connecting a counter or timer that has a DC-DC converter to a transistor output module (maximum load current 0.1A) as a load, select an output module whose maximum load current is larger than inrush current of the load.
Selecting an output module by average current of the load may cause a failure of the module because inrush current flows at a constant frequency at power-on or during operation due to the connected load.
If an output module needs to be selected by average current of the load, take either of the following actions to reduce an influence from inrush current.

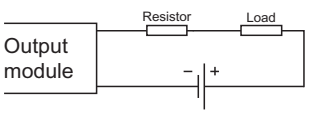

• Connecting a resistor to the load in series

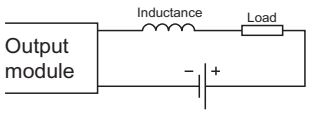

• Connecting an inductor to the load in series

AbN
automation

(3) Precaution for using the transistor output module

(a) Action against reverse current

If a transistor output module is wired as shown below, reverse current flows in an output element, causing a failure of the element.
When wiring a transistor output module, connect a diode as shown below.

• When connecting transistor output modules in parallel

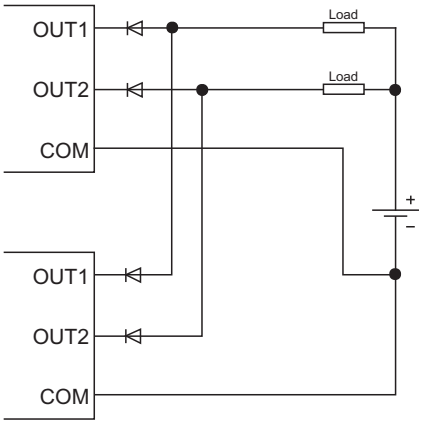

Sink type

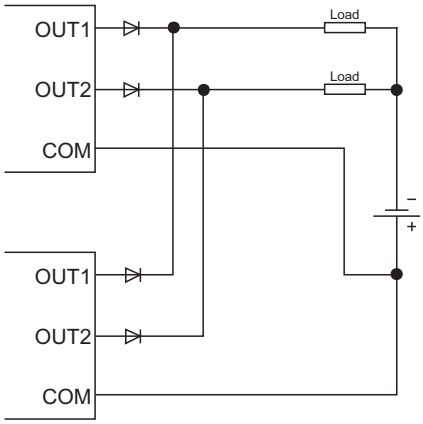

Source type

• When incorporating an additional circuit parallel to a transistor output module

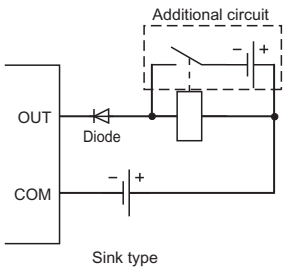

Sink type

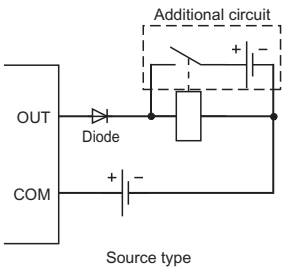

Source type

1 - 14

(b) Measures against back EMF

When an inductive load is connected, connect a diode to the load in parallel. Use a diode that meets the following conditions.

- Reverse breakdown voltage is equal to or more than 10 times as large as the circuit voltage.
- Forward current is equal to or more than 2 times as large as the load current.

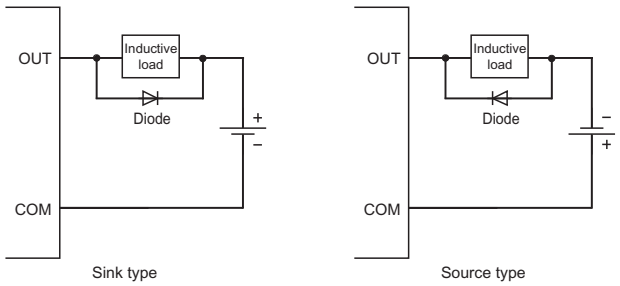

(4) Modules that require an external short-circuit protection circuit

The following modules have no short-circuit protection function. Configure a short-circuit protection circuit external to the programmable controller when they are used.

- AJ65SBTB1-8T1
- AJ65SBTB2-8T1
- AJ65SBTB1-16T1
- AJ65SBTB2-16T1
- AJ65SBTB1B-16TE1
- AJ65VBTS2-16T
- AJ65SBTB1-32T1
- AJ65SBTB1-32TE1
- AJ65DBTB1-32T1
- AJ65VBTS2-32T
- AJ65SBTC1-32T1
- AJ65SBTB32-8DT2
- AJ65SBTB1-16DT2
- AJ65SBTB1-16DT3
- AJ65SBTB32-16DT2
- AJ65SBTB32-16KDT2
- AJ65SBTB32-16KDT8
- AJ65SBTB1-32DT2
- AJ65SBTB1-32KDT2
- AJ65SBTB1-32DT3
- AJ65SBTB1-32KDT8
- AJ65SBTB1-32DTE1
- AJ65DBTB1-32DT1
- AJ65VBTS32-16DT
- AJ65VBTS32-32DT
- AJ65SBTC4-16DT2
- AJ65SBTC1-32DT2
- AJ65SBTC1-32DT3

AbN
automation

(5) Precautions when using a 3-wire module

When supplying power from a 3-wire module to an external device, such as a sensor, the total current value must be equal to or less than the value of "supply current for connected device" specified for the module.

(6) Precautions for using the contact output module

When using the contact output module, consider the following.

- Relay life
- Effects to relay life due to connected load
- Measures against back EMF

(a) Relay life

Applicable module: AJ65SBTB2N-8R, AJ65SBTB2N-16R,
AJ65DBTB1-32R, AJ65DBTB1-32DR

The relay life depends on the operating environment. Select a module according to the operating environment. The relay lives shown below are the actual service values, not the guaranteed values. Replace the module well in advance since the actual switching life may be shorter than the one shown below.

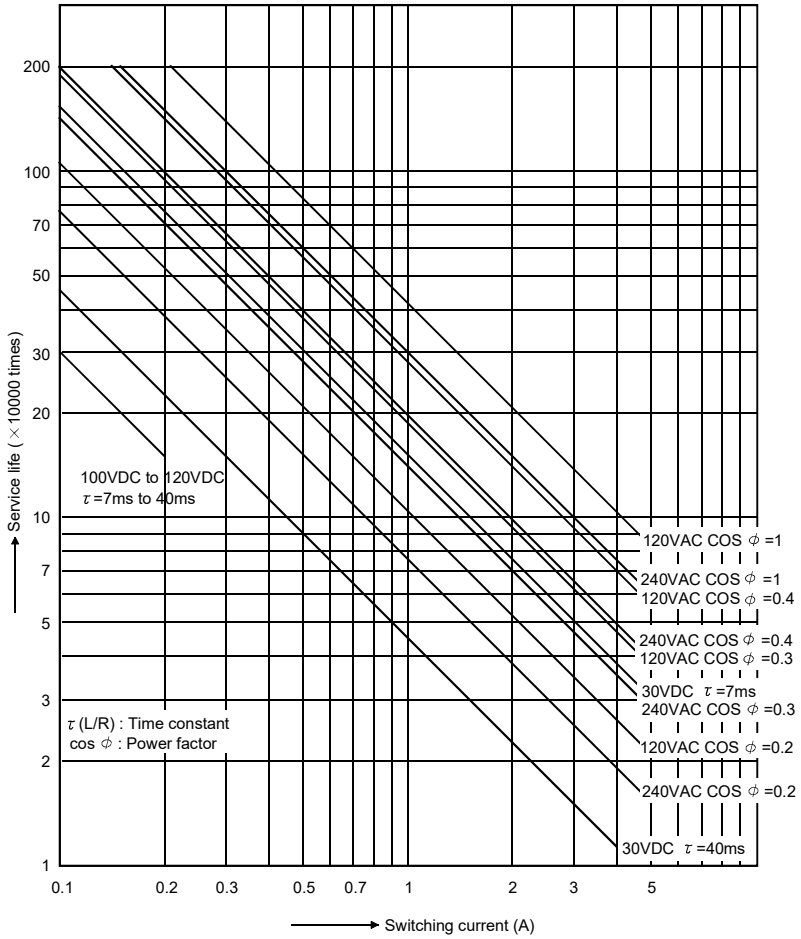

Operating environment	Switching life
Rated switching voltage/current, rated load	100 thousand times
200VAC 1.5A, 240VAC 1A (COS ϕ =0.7)	100 thousand times
200VAC 1A, 240VAC 0.5A (COS ϕ =0.35)	100 thousand times
24VDC 1A, 100VDC 0.1A (L/R=7ms)	100 thousand times

1 - 16

POINT

When using the module for the application in which the relay contact is frequently switched, the relay life span should be considered. Therefore, it is recommended to use a triac output module.

(b) Effects to relay life due to connected load

The actual relay life may be significantly shortened compared to the one shown above, depending on the type of a load connected and the characteristics of inrush current.
Also, the inrush current may cause contact welding.
Take the following measures to prevent shortening of the relay life and the contact welding.

- Select a load so that the inrush current will be within the rated current of the module.
- Connect an external relay that can withstand the inrush current.

The following table shows the relation between the load and the inrush current.
Select a load so that the inrush current (i) and the rated current (io) will be within the rated switching current specified for the output module used.
The inrush current may flow for a longer time depending on the load.

Load type	Signal waveform diagram	Inrush current (i)/rated current (io)	Signal waveform diagram	Inrush current (i)/rated current (io)
Inductive load	Load of a solenoid 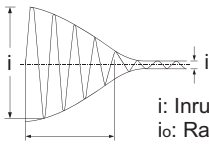 0.07 to 0.1 seconds	Approx. 10 to 20 times	Load of an electromagnetic contactor 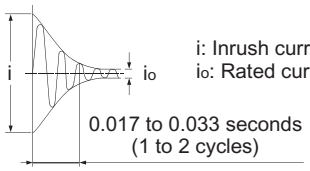 	Approx. 3 to 10 times
Lamp load	Load of an incandescent bulb 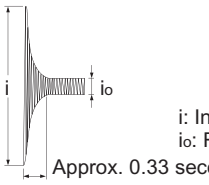 	Approx. 3 to 10 times	Load of a mercury lamp 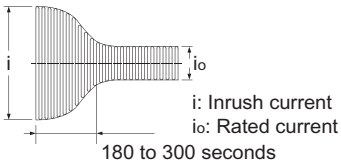 	Approx. 3 times[*1]
	Load of a fluorescent 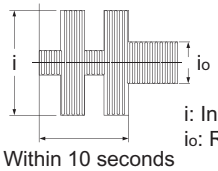 	Approx. 5 to 10 times	—	—
Capacitive load	Capacitive load[*2] 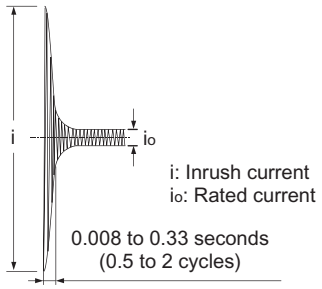 	Approx. 20 to 40 times	—	—

AbN
automation

(c) Measures against back EMF

Configure a contact protection circuit for extending the contact life, preventing noise when the contact is cut off, and suppressing the generation of carbide and nitric acid due to arc discharge.

An Incorrect contact protection circuit may cause contact welding.

Also, when using the contact protection circuit, the recovery time may be long.

The following table shows the representative examples of the contact protection circuit.

Circuit example		Method for selecting elements	Remarks
Capacitor + Resistor method (CR method)	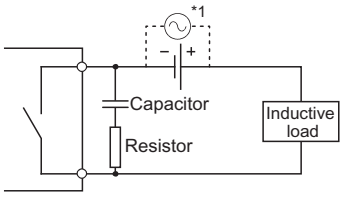	Refer to the following for constants of the capacitor and resistor. Note that the following values may differ depending on a nature of the load and a variation of characteristics of it. • Capacitor 0.5 to 1 (μF) against contact current of 1A • Resistor 0.5 to 1 (Ω) against contact voltage of 1V Use a capacitor whose withstand voltage is 200 to 300V. In AC circuit, use a capacitor having no polarity.	If a load is from a relay or solenoid, the recovery time delays. A capacitor suppresses electric discharge while a contact is off, and a resistor restricts a flow of current while a contact is on.
	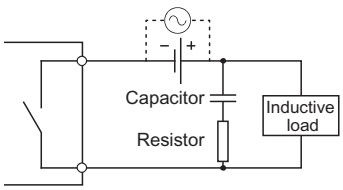		
Diode method	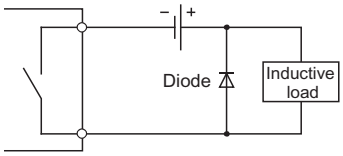	Use a diode that meets both conditions shown below. • Reverse breakdown voltage is equal to or more than 10 times as large as the circuit voltage. • The forward current is equal to or more than 2 times as large as the load current.	The recovery time is later than the CR method.
Diode + Zener diode method	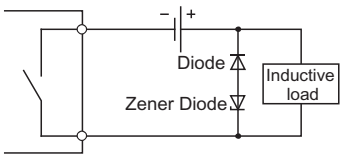	Use zener voltage for the zener diode equal to or more than the power supply voltage.	The diode method is effective when the recovery time is too late.

*1: When using AC power, impedance of CR must be larger enough than that of the load. (prevention of a malfunction due to leak current from the CR)

(To the next page)

1 - 18

Circuit example		Method for selecting elements	Remarks
Varistor method	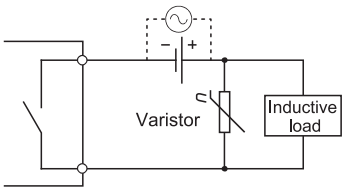	Select a cut voltage (Vc) for the varistor to meet the following condition. • Vc > power voltage × 1.5(V) • Vc > power voltage × 1.5(V) × √2 (When using AC power) This method is not effective when the Vc is too high	The recovery time delays slightly.

POINT

(1) Avoid providing contact protection circuits shown below.
These circuits are effective for preventing an arc at shut-off. However, the contact welding may occur because the charge current flows to capacitor when the contact turns on or off.
A DC inductive load is usually harder for switching than a resistor load, but if a proper protection circuit is configured, the performance will be similar to the resistor load.

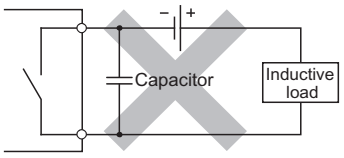

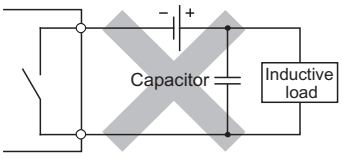

(2) A protection circuit must be provided closely to a load or contact (module). If their distance is far, the protection circuit may not be effective. Appropriate distance is within 50cm.

(7) Precautions for using the triac output module
Because of characteristics of a triac, a sudden change of voltage or current may cause unstable operations of a triac used for the triac output module.
Whether the voltage or current change causes a problem differs depending on an individual part (each triac), thus check the following when using the triac output module.

(a) Checking of the load current
When the current consumption is equal to or smaller than the minimum load current and the margin is low by using an inductive load such as a solenoid valve, a triac may not turn on or off properly. In that case, an action such as connecting a bleeder resistance is required.
For detail on actions, refer to Section 8.2.2.

(b) Precautions on a full-wave rectifier load
The load current of a full-wave rectifier load forms waves similar to rectangular waves as shown below.

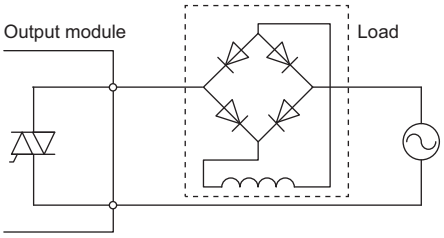

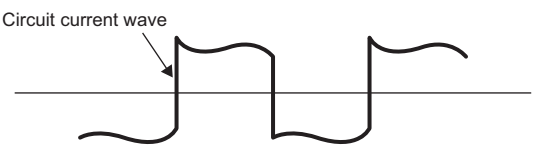

1 - 19

AbN
automation

A triac may not operate properly if the current forms rectangular waves associated with sudden current changes. To avoid it, use a load with which the load current does not form rectangular waves.

(c) Measures for connecting an inductive load

To connect an inductive load, take measures to reduce noise to the side where the load is connected as shown below.

Circuit example		Method for selecting elements	Remarks
Varistor method	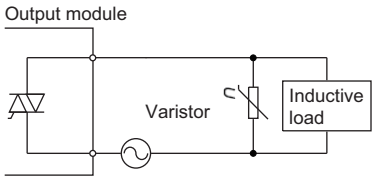	Select a cut voltage (Vc) for the varistor to meet the following condition. • Vc > Power supply voltage × 1.5(V) × √2 This method is not effective when the Vc is too high.	The recovery time delays slightly.
Capacitor + Resistor method (CR method)	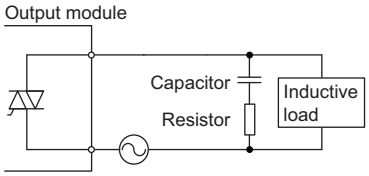	Refer to the following for constants of the capacitor and resistor. Note that the following values may differ depending on a nature of the load and a variation of characteristics of it. • Capacitor: 0.5 to 1 (μF) against load current of 1A • Resistor: 0.5 to 1(Ω) against power supply voltage of 1V Use a capacitor whose withstand voltage is equal to or more than the rated voltage. Use a capacitor having no polarity.	If a load is from a relay or solenoid, the recovery time delays.

1 - 20

(d) Measures for connecting an inductive load (when installing a contact between the load and the output terminal)

To install a contact (such as an interlock) between the load and the output terminal, take measures to reduce noise as shown below.

Though measures (varistor method, capacitor + resistor method) are normally taken to the load side, in some cases, it is more efficient to take the measures to the module side considering the contact effect.

Circuit example		Method for selecting elements	Remarks
Varistor method	• Measure taken to the load side 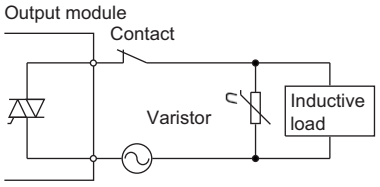 • Measure taken to the module side 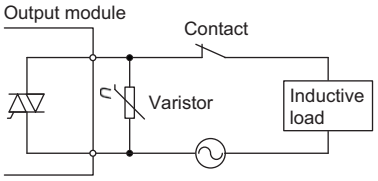	Select a cut voltage (Vc) for the varistor to meet the following condition. • Vc > Power supply voltage × 1.5(V) × √2 This method is not effective when the Vc is too high.	The recovery time delays slightly.

1 - 21

AbN
automation

1.3.3 Modules with protection functions

This section describes the protection functions of the following modules.

(1) Modules with overload protection function, overvoltage protection function, and overheat protection function

Output module	AJ65SBTB1-8T, AJ65SBTB1-16T, AJ65SBTB1-32T, AJ65SBTB2-8T, AJ65SBTB2-16T, AJ65SBTC1-32T, AJ65SBTCF1-32T, AJ65VBTCU2-8T, AJ65VBTCU2-16T, AJ65VBTCE2-8T, AJ65VBTCE2-16T
I/O combined module	AJ65SBTB1-16DT, AJ65SBTB1-32DT, AJ65SBTB1-16DT1, AJ65SBTB1-32DT1, AJ65SBTB32-8DT, AJ65SBTB32-16DT, AJ65SBTC4-16DT, AJ65SBTC1-32DT, AJ65SBTC1-32DT1, AJ65SBTW4-16DT, AJ65SBTCF1-32DT, AJ65VBTCF1-32DT1, AJ65VBTCE32-16DT, AJ65VBTCE32-32DT

(2) Modules with overload protection function and overheat protection function

Output module	AJ65SBTB1-8TE, AJ65SBTB1-16TE, AJ65FBTA2-16T, AJ65FBTA2-16TE, AJ65VBTCE3-16TE
I/O combined module	AJ65FBTA42-16DT, AJ65FBTA42-16DTE, AJ65VBTCE3-16DTE, AJ65VBTCE3-32DTE

Function	Description
Common to protection functions	1. When an overcurrent continues to flow and generates overheat, overheat protection is activated. 2. The functions are provided for protecting only the circuits inside the module. A load error may deteriorate output elements or discolour the module case or printed circuit board due to increase in temperature within the module. If a load error occurs, turn off the corresponding output immediately and eliminate the error cause.
Overload protection function	1. When the output module detects an overcurrent, the current limiter[*1] is activated to limit the output current. 2. The overload protection function of the following modules is activated under the condition of 1 to 3A per point and limits the output current. AJ65SBTB1-8TE, AJ65SBTB1-16TE, AJ65VBTCE2-8T, AJ65VBTCE2-16T, AJ65VBTCE3-16TE, AJ65VBTCU2-8T, AJ65VBTCU2-16T, AJ65SBTCF1-32T, AJ65VBTCE32-16DT, AJ65VBTCE3-16DTE, AJ65VBTCE32-32DT, AJ65VBTCE3-32DTE, AJ65SBTCF1-32DT, AJ65VBTCF1-32DT1, AJ65VBTCFJ1-32DT1 3. The overload protection function of the following modules is activated under the condition of 1 to 6A per point and limits the output current. AJ65SBTB1-8T, AJ65SBTB2-8T, AJ65SBTB1-16T, AJ65SBTB2-16T, AJ65SBTB1-32T, AJ65SBTC1-32T, AJ65FBTA2-16T, AJ65SBTB32-8DT, AJ65SBTB1-16DT, AJ65SBTB1-16DT1, AJ65SBTB32-16DT, AJ65SBTB1-32DT, AJ65SBTB1-32DT1, AJ65SBTC4-16DT, AJ65SBTC1-32DT, AJ65SBTC1-32DT1, AJ65FBTA42-16DT, AJ65SBTW4-16DT 4. The overload protection function of the following modules is activated under the condition of 5 to 14A per point and limits the output current. AJ65FBTA2-16TE, AJ65FBTA42-16DTE 5. The overload protection function is automatically reset when the load current drops to the rated value.
Overvoltage protection function	1. This function protects elements from an abrupt surge caused when a coil load is used.

Function	Description
Overheat protection function	1. The overheat protection function of the following modules is activated in units of two points. AJ65SBTB1-8TE, AJ65SBTB1-16TE, AJ65VBTCE3-16TE, AJ65VBTCE3-16DTE, AJ65VBTCE3-32DTE (For example, when this function is activated for either Y0 or Y1 output signal, Y0 and Y1 simultaneously turn off. When the overheat condition continues, the heat is conducted to other loads and the corresponding protection functions may also be activated.) If this function is activated while an output signal is on, the voltage oscillates between 0V and the load voltage. When the load voltage is 24VDC, the average voltage during oscillation is approximately 7VDC. (The voltage does not oscillate when an output signal is off.) To ensure that output turns off when the overheat protection function becomes activated, use an external load that turns off at higher than 7VDC under overheat condition. 2. For the modules with the overheat protection function other than the above, the function is activated in units of one point. When this function becomes activated, an output signal turns off. 3. The overheat protection function is automatically reset when the temperature falls below the pre-set value.

*1: The limiter is a function that limits an overcurrent to a certain current value to keep it flowing.

AbN
automation

1.4 Specification List

Specification list for each compact remote I/O module is shown below.

(1) Input module

Model	Input format	No. of points per module	Insulation method	Rated input voltage	Input current	Operation voltage		Input response time		Input display	External connection	Common connection	Internal current consumption	External dimensions	Reference
						ON voltage	OFF voltage	OFF → ON	ON → OFF						
AJ65SBTB1-8D	DC input (Positive/ Negative common)	8 points	Photocoupler insulation	24VDC	Approx. 7mA	14V or more	6V or less	1.5ms or less		LED display	1-wire terminal block	8 points 1 common	30mA	＊1	4.1.3
AJ65SBTB1-16D		16 points										16 points 1 common	35mA	＊2	4.1.5
AJ65SBTB1-16D1					Approx. 5mA	15V or more	3V or less	0.2ms or less					40mA		4.1.6
AJ65DBTB1-32D		32 points			Approx. 5mA	15V or more	5V or less	10ms or less					45mA	＊3	4.1.14
AJ65SBTB1-32D					Approx. 7mA	14V or more	6V or less	1.5ms or less				32 points 1 common	45mA	＊3	4.1.10
AJ65SBTB1-32KD						14V or more	5.5V or less	＊14					75mA		4.1.11
AJ65SBTB1-32D1					Approx. 5mA	15V or more	3V or less	0.2ms or less					50mA		4.1.12
AJ65SBTB1-32D5					Approx. 4mA	3.5V or more	1.5V or less	1.5ms or less					35mA		4.1.13
AJ65SBTC1-32D					Approx. 5mA	14V or more	6V or less				1-wire one-touch connector		45mA	＊2	4.4.6
AJ65SBTC1-32D1						15V or more	3V or less	0.2ms or less							4.4.7
AJ65SBTC4-16D		16 points				14V or more	6V or less	1.5ms or less			4-wire one-touch connector	16 points 1 common	35mA		4.4.2
AJ65SBTC4-16DN	DC input (Positive common)														4.4.3
AJ65SBTC4-16DE	DC input (Negative common)														4.4.4
AJ65SBTW4-16D	DC input (Positive/ negative common)										4-wire waterproof connector		120mA	＊4	4.6.3
AJ65SBTCF1-32D		32 points									1-wire FCN connector	32 points 1 common	45mA	＊2	4.5.1
AJ65SBTB3-8D		8 points			Approx. 7mA	14V or more	6V or less				3-wire terminal block	8 points 1 common	40mA	＊2	4.1.4
AJ65SBTB3-16D		16 points										16 points 1 common	45mA	＊3	4.1.7
AJ65SBTB3-16KD					Approx. 7mA	14V or more	5.5V or less	＊14					50mA		4.1.8
AJ65SBTB3-16D5					Approx. 4mA	3.5V or more	1.5V or less	1.5ms or less					30mA		4.1.9
AJ65VBTCU3-8D1	DC input (Positive common)	8 points			Approx. 5mA	15V or more	3V or less	0.2ms or less			3-wire one-touch connector	8 points 1 common	35mA	＊5	4.4.1
AJ65VBTCU3-16D1		16 points										16 points 1 common	40mA	＊6	4.4.5
AJ65SBTB2N-8A	AC input	8 points		100 to 120VAC 50/60Hz	Approx. 7mA	80V or more	30V or less	20ms or less			2-wire terminal block	8 points 1 common	35mA	＊2	4.1.1
AJ65SBTB2N-16A		16 points										16 points 1 common	40mA	＊3	4.1.2

＊1 : 87.3 (W) × 50 (H) × 40 (D)mm
＊2 : 118 (W) × 50 (H) × 40 (D)mm
＊3 : 179 (W) × 50 (H) × 40 (D)mm
＊4 : 184.7 (W) × 57.9 (H) × 86 (D)mm
＊5 : 41 (W) × 115 (H) × 62 (D)mm
＊6 : 60 (W) × 115 (H) × 62 (D)mm
＊7 : 60 (W) × 200 (H) × 48 (D)mm
＊8 : 137 (W) × 50 (H) × 51.5 (D)mm
＊9 : 222 (W) × 50 (H) × 51.5 (D)mm
＊10 : 100 (W) × 40 (H) × 43.5 (D)mm
＊11 : 100 (W) × 50 (H) × 45.5 (D)mm
＊12 : 155 (W) × 50 (H) × 45.5 (D)mm
＊13 : 64 (W) × 170 (H) × 80 (D)mm
＊14 : 0.2ms or less/1.5ms or less/5ms or less/10ms or less
(Depending on the input response speed setting value)

1 - 24

Model	Input format	No. of points per module	Insulation method	Rated input voltage	Input current	Operation voltage		Input response time		Input display	External connection	Common connection	Internal current consumption	External dimensions	Reference
						ON voltage	OFF voltage	OFF → ON	ON → OFF						
AJ65FBTA4-16D	DC input (Positive common)	16 points	Photocoupler insulation	24VDC	Approx. 7mA	14V or more	6V or less	1.5ms or less		LED display	2 to 4-wire waterproof connector	16 points 1 common	40mA	＊7	4.6.1
AJ65FBTA4-16DE	DC input (Negative common)														4.6.2
AJ65VBTS3-16D	DC input (Positive common)				Approx. 5mA						Spring clamp terminal block 3-wire type		35mA	＊8	4.2.1
AJ65VBTS3-32D		32 points											40mA	＊9	4.2.2
AJ65VBTCE3-8D		8 points									Sensor connector (e-CON) 3-wire type	8 points 1 common	30mA	＊10	4.3.1
AJ65VBTCE3-16D		16 points										16 points 1 common	35mA	＊11	4.3.2
AJ65VBTCE3-32D		32 points										32 points 1 common	40mA	＊12	4.3.3
AJ65VBTCE3-16DE	DC input (Negative common)	16 points										16 points 1 common	35mA	＊11	4.3.4
AJ65VBTCE3-32DE		32 points										32 points 1 common	40mA	＊12	4.3.5

＊1 : 87.3 (W) × 50 (H) × 40 (D)mm
＊2 : 118 (W) × 50 (H) × 40 (D)mm
＊3 : 179 (W) × 50 (H) × 40 (D)mm
＊4 : 184.7 (W) × 57.9 (H) × 86 (D)mm
＊5 : 41 (W) × 115 (H) × 62 (D)mm
＊6 : 60 (W) × 115 (H) × 62 (D)mm
＊7 : 60 (W) × 200 (H) × 48 (D)mm
＊8 : 137 (W) × 50 (H) × 51.5 (D)mm
＊9 : 222 (W) × 50 (H) × 51.5 (D)mm
＊10 : 100 (W) × 40 (H) × 43.5 (D)mm
＊11 : 100 (W) × 50 (H) × 45.5 (D)mm
＊12 : 155 (W) × 50 (H) × 45.5 (D)mm
＊13 : 64 (W) × 170 (H) × 80 (D)mm
＊14 : 0.2ms or less/1.5ms or less/5ms or less/10ms or less
(Depending on the input response speed setting value)

AbN
automation

(2) Output module

Model	Output format	No. of points per module	Insulation method	Rated load voltage	Maximum load current		Output response time		Output display	Surge suppressor	External connection	Common connection	Internal current consumption	External dimensions	Reference
					1 point	1 common	OFF → ON	ON → OFF							
AJ65SBTB1-8T	Transistor output ＊14 (sink type)	8 points	Photocoupler insulation	12/24 VDC	0.5 A	2.4 A	0.5ms or less	1.5ms or less	LED display	Zener diode	1-wire terminal block	8 points 1 common	35mA	＊1	5.1.1
AJ65SBTB1-16T		16 points				3.6 A						16 points 1 common	50mA	＊2	5.1.5
AJ65SBTB1-32T		32 points				4.8 A						32 points 1 common	65mA	＊3	5.1.9
AJ65SBTC1-32T					0.1 A	3.2 A					1-wire one-touch connector		60mA	＊2	5.4.3
AJ65SBTB1-8T1	Transistor output ＊13 (sink type)	8 points			0.5 A	2.4 A					1-wire terminal block	8 points 1 common	35mA	＊1	5.1.2
AJ65SBTB1-16T1		16 points				3.6 A						16 points 1 common	50mA	＊2	5.1.6
AJ65DBTB1-32T1		32 points				8 A						32 points 1 common	65mA	＊12	5.1.19
AJ65SBTB1-32T1						4.8 A							65mA	＊3	5.1.10
AJ65SBTC1-32T1					0.1 A	3.2 A					1-wire one-touch connector		60mA	＊2	5.4.4
AJ65SBTB1-8TE	Transistor output ＊13 (source type)	8 points			0.1 A	0.8 A					1-wire terminal block	8 points 1 common	35mA	＊1	5.1.11
AJ65SBTB1-16TE		16 points				1.6 A						16 points 1 common	50mA	＊2	5.1.12
AJ65SBTB1B-16TE1		16 points			0.5 A	4 A						8 points 1 common	50mA	＊3	5.1.13
AJ65SBTB1-32TE1		32 points				4.8A						32 points 1 common	65mA	＊3	5.1.14
AJ65SBTB2-8T	Transistor output ＊14 (sink type)	8 points			0.5 A	2.4 A					2-wire terminal block	8 points 1 common	45mA	＊2	5.1.3
AJ65SBTB2-16T		16 points				3.6 A						16 points 1 common	55mA	＊3	5.1.7
AJ65SBTB2-8T1	Transistor output ＊12 (sink type)	8 points			0.5 A	2.4 A						8 points 1 common	45mA	＊2	5.1.4
AJ65SBTB2-16T1		16 points				3.6 A						16 points 1 common	55mA	＊3	5.1.8
AJ65SBTB2N-8R	Contact output	8 points	Relay insulation	24VDC 240VAC	2 A	4 A	10ms or less	12ms or less		None		8 points 1 common	85mA	＊2	5.1.15
AJ65SBTB2N-16R		16 points				8 A						16 points 1 common	120mA	＊3	5.1.16
AJ65DBTB1-32R		32 points	Photocoupler insulation			4 A					1-wire terminal block	8 points 1 common	80mA	＊12	5.1.20
AJ65SBTB2N-8S	Triac output ＊16	8 points		100 to 240VAC 50/60Hz	0.6 A	2.4 A	1ms or less	1ms + 0.5 cycle or less		CR Absorber	2-wire terminal block		55mA	＊2	5.1.17
AJ65SBTB2N-16S		16 points				4.8 A						32 points 1 common	85mA	＊3	5.1.18

＊1 : 87.3 (W) × 50 (H) × 40 (D)mm
＊2 : 118 (W) × 50 (H) × 40 (D)mm
＊3 : 179 (W) × 50 (H) × 40 (D)mm
＊4 : 184.7 (W) × 57.9 (H) × 86 (D)mm
＊5 : 41 (W) × 115 (H) × 62 (D)mm
＊6 : 60 (W) × 115 (H) × 62 (D)mm
＊7 : 60 (W) × 200 (H) × 48 (D)mm
＊8: 137 (W) × 50 (H) × 51.5 (D)mm
＊9: 222 (W) × 50 (H) × 51.5 (D)mm
＊10 : 100 (W) × 40 (H) × 43.5 (D)mm
＊11 : 100 (W) × 50 (H) × 45.5 (D)mm
＊12 : 64 (W) × 170 (H) × 80 (D)mm
＊13 : Leakage current when the transistor output is OFF (0.1mA or less)
＊14 : Leakage current when the transistor output is OFF (0.25mA or less)
＊15 : Leakage current when the transistor output is OFF (0.3mA or less)
＊16 : Leakage current when the triac output is OFF 1.5mA rms or less (100VAC rms 60Hz), 3mA rms or less (200VAC rms 60Hz)

1 - 26

Model	Output format	No. of points per module	Insulation method	Rated load voltage	Maximum load current		Output response time		Output display	Surge suppressor	External connection	Common connection	Internal current consumption	External dimensions	Reference
					1 point	1 common	OFF → ON	ON → OFF							
AJ65SBTCF1-32T	Transistor output ＊13 (sink type)	32 points	Photocoupler insulation	12/24 VDC	0.1 A	3.2 A	0.5ms or less	1.5ms or less	LED display	Zener diode	1-wire FCN connector	32 points 1 common	60mA	＊2	5.5.1
AJ65VBTCU2-8T		8 points				0.8 A	1ms or less	1ms or less			2-wire one-touch connector	8 points 1 common	35mA	＊5	5.4.1
AJ65VBTCU2-16T		16 points				1.6 A						16 points 1 common	40mA	＊6	5.4.2
AJ65FBTA2-16T	Transistor output ＊14 (sink type)				0.5 A	4.0 A	0.5ms or less	1.5ms or less			2-wire waterproof connector		50mA	＊7	5.6.1
AJ65FBTA2-16TE	Transistor output ＊15 (source type)				1.0 A								50mA	＊7	5.6.2
AJ65VBTS2-16T	Transistor output ＊12 (sink type)				0.5 A		1ms or less	1ms or less			Spring clamp terminal block 2-wire type		45mA	＊8	5.2.1
AJ65VBTS2-32T		32 points											60mA	＊9	5.2.2
AJ65VBTCE2-8T		8 points			0.1 A	0.8 A					Sensor connector (e-CON) 2-wire type	8 points 1 common	35mA	＊10	5.3.1
AJ65VBTCE2-16T		16 points				1.6 A						16 points 1 common	45mA	＊11	5.3.2
AJ65VBTCE3-16TE	Transistor output ＊13 (source type)										Sensor connector (e-CON) 3-wire type				5.3.3

＊1 : 87.3 (W) × 50 (H) × 40 (D)mm
＊2 : 118 (W) × 50 (H) × 40 (D)mm
＊3 : 179 (W) × 50 (H) × 40 (D)mm
＊4 : 184.7 (W) × 57.9 (H) × 86 (D)mm
＊5 : 41 (W) × 115 (H) × 62 (D)mm
＊6 : 60 (W) × 115 (H) × 62 (D)mm
＊7 : 60 (W) × 200 (H) × 48 (D)mm
＊8: 137 (W) × 50 (H) × 51.5 (D)mm
＊9: 222 (W) × 50 (H) × 51.5 (D)mm
＊10 : 100 (W) × 40 (H) × 43.5 (D)mm
＊11 : 100 (W) × 50 (H) × 45.5 (D)mm
＊12 : 64 (W) × 170 (H) × 80 (D)mm
＊13 : Leakage current when the transistor output is OFF (0.1mA or less)
＊14 : Leakage current when the transistor output is OFF (0.25mA or less)
＊15 : Leakage current when the transistor output is OFF (0.3mA or less)
＊16 : Leakage current when the triac output is OFF 1.5mA rms or less (100VAC rms 60Hz), 3mA rms or less (200VAC rms 60Hz)

AbN
automation

(3) Combined I/O module
In the combined I/O module, the input side and the output side are structure as a pair.

(a) Input side

Division	Model	Input format	No. of points per module	Insulation method	Rated input voltage	Input current	Operation voltage: ON voltage	Operation voltage: OFF voltage	Input response time: OFF → ON	Input response time: ON → OFF	Input display	External connection	Common connection	Internal current consumption	External dimensions	Reference
Input side	AJ65SBTC1-32DT	DC input (Positive common)	16 points	Photocoupler insulation	24 VDC	Approx. 5mA	14V or more	6V or less	1.5ms or less		LED display	1-wire one-touch connector	32 points 1 common (shared with output)	50mA	＊1	6.4.3
	AJ65SBTC1-32DT1						15V or more	3V or less	0.2ms or less							6.4.4
	AJ65SBTC1-32DT2						14V or more	6V or less	1.5ms or less							6.4.5
	AJ65SBTC1-32DT3						15V or more	3V or less	0.2ms or less							6.4.6
	AJ65SBTC4-16DT		8 points			Approx. 5mA	14V or more	6V or less	1.5ms or less			4-wire one-touch connector	16 points 1 common (shared with output)	40mA		6.4.1
	AJ65SBTC4-16DT2															6.4.2
	AJ65SBTW4-16DT											4-wire waterproof connector		90mA	＊3	6.6.3
	AJ65SBTB1-16DT		8 points			Approx. 7mA						1-wire terminal block	16 points 1 common (shared with output)	50mA	＊1	6.1.3
	AJ65SBTB1-32DT		16 points										32 points 1 common (shared with output)	60mA	＊2	6.1.13
	AJ65SBTB1-16DT1		8 points			Approx. 5mA	15V or more	3V or less	0.2ms or less				16 points 1 common (shared with output)	55mA	＊1	6.1.4
	AJ65SBTB1-32DT1		16 points										32 points 1 common (shared with output)	60mA	＊2	6.1.14
	AJ65DBTB1-32DT1							5V or less	10ms or less				16 points 1 common	55mA	＊5	6.1.20
	AJ65SBTB1-32DTE1	DC input (Negative common)				Approx. 7mA	14V or more	6V or less	1.5ms or less				32 points 1 common (shared with output)	50mA	＊2	6.1.19
	AJ65SBTB1-16DT2	DC input (Positive common)	8 points										16 points 1 common (shared with output)	50mA	＊1	6.1.5
	AJ65SBTB1-32DT2		16 points										32 points 1 common (shared with output)	60mA	＊2	6.1.15
	AJ65SBTB1-32KDT2							5.5V or less	＊11					65mA		6.1.16
	AJ65SBTB1-16DT3		8 points			Approx. 5mA	15V or more	3V or less	0.2ms or less				16 points 1 common (shared with output)	55mA	＊1	6.1.6
	AJ65SBTB1-32DT3		16 points										32 points 1 common (shared with output)	60mA	＊2	6.1.17
	AJ65SBTB1-32KDT8				12 VDC	Approx. 11mA	5.6V or more	2.4V or less	＊11					65mA		6.1.18
	AJ65SBTB32-8DT		4 points		24 VDC	Approx. 7mA	14V or more	6V or less	1.5ms or less			Input 3-wire Output 2-wire terminal block	8 points 1 common (shared with output)	45mA	＊1	6.1.1
	AJ65SBTB32-16DT		8 points										16 points 1 common (shared with output)	50mA	＊2	6.1.7
	AJ65SBTB32-8DT2		4 points										8 points 1 common (shared with output)	45mA	＊1	6.1.2
	AJ65SBTB32-16DT2		8 points										16 points 1 common (shared with output)	50mA	＊2	6.1.8
	AJ65SBTB32-16KDT2							5.5V or less	＊11					55mA		6.1.9
	AJ65SBTB32-16KDT8				12 VDC	Approx. 11mA	5.6V or more	2.4V or less	＊11					55mA		6.1.10

＊1 : 118 (W) × 50 (H) × 40 (D)mm
＊2 : 179 (W) × 50 (H) × 40 (D)mm
＊3 : 184.7 (W) × 57.9 (H) × 86 (D)mm
＊4 : 41 (W) × 115 (H) × 67 (D)mm
＊5 : 64 (W) × 170 (H) × 80 (D)mm
＊6 : 60 (W) × 200 (H) × 48 (D)mm
＊7 : 137 (W) × 50 (H) × 51.5 (D)mm
＊8 : 222 (W) × 50 (H) × 51.5 (D)mm
＊9 : 100 (W) × 50 (H) × 41.5 (D)mm
＊10 : 155 (W) × 50 (H) × 45.5 (D)mm
＊11 : 0.2ms or less/1.5ms or less/5ms or less/10ms or less
(Depending on the input response speed setting value)

1 - 28

Division	Model	Input format	No. of points per module	Insulation method	Rated input voltage	Input current	Operation voltage		Input response time		Input display	External connection	Common connection	Internal current consumption	External dimensions	Reference
							ON voltage	OFF voltage	OFF → ON	ON → OFF						
Input side	AJ65SBTB32-16DR	DC input (Positive/ negative common)	8 points	Photocoupler insulation	24 VDC	Approx. 7mA	14V or more	6V or less	1.5ms or less		LED display	Input 3-wire Output 2-wire terminal block	8 points 1 common	85mA	＊2	6.1.11
	AJ65SBTB32-16KDR							5.5V or less	＊11					100mA		6.1.12
	AJ65DBTB1-32DR		16 points			Approx. 5mA	15V or more	5V or less	10ms or less			1-wire terminal block	16 points 1 common	60mA	＊5	6.1.21
	AJ65SBTCF1-32DT						14V or more	6V or less	1.5ms or less			1-wire one-touch connector		50mA	＊1	6.5.1
	AJ65VBTCF1-32DT1						15V or more	3V or less	0.2ms or less						＊4	6.5.2
	AJ65VBTCFJ1-32DT1	DC input (Positive common)													＊6	6.5.3
	AJ65FBTA42-16DT		8 points			Approx. 7mA	14V or more	6V or less	1.5ms or less			2 to 4-wire waterproof connector	8 points 1 common (Shared with output)			6.6.1
	AJ65FBTA42-16DTE	DC input (Negative common)												45mA		6.6.2
	AJ65VBTS32-16DT	DC input (Positive common)				Approx. 5mA						Spring clamp terminal block 3-wire type	16 points 1 common (shared with output)	40mA	＊7	6.2.1
	AJ65VBTS32-32DT		16 points										16 points 1 common	50mA	＊8	6.2.2
	AJ65VBTCE32-16DT		8 points									Sensor connector (e-CON) 3-wire type	16 points 1 common (shared with output)	40mA	＊9	6.3.1
	AJ65VBTCE32-32DT		16 points										32 points 1 common (shared with output)	45mA	＊10	6.3.3
	AJ65VBTCE3-16DTE	DC input (Negative common)	8 points										16 points 1 common (shared with output)	40mA	＊9	6.3.2
	AJ65VBTCE3-32DTE		16 points										32 points 1 common (shared with output)	45mA	＊10	6.3.4

＊1 : 118 (W) × 50 (H) × 40 (D)mm
＊2 : 179 (W) × 50 (H) × 40 (D)mm
＊3 : 184.7 (W) × 57.9 (H) × 86 (D)mm
＊4 : 41 (W) × 115 (H) × 67 (D)mm
＊5 : 64 (W) × 170 (H) × 80 (D)mm
＊6 : 60 (W) × 200 (H) × 48 (D)mm
＊7 : 137 (W) × 50 (H) × 51.5 (D)mm
＊8 : 222 (W) × 50 (H) × 51.5 (D)mm
＊9 : 100 (W) × 50 (H) × 41.5 (D)mm
＊10 : 155 (W) × 50 (H) × 45.5 (D)mm
＊11 : 0.2ms or less/1.5ms or less/5ms or less/10ms or less
(Depending on the input response speed setting value)

1 - 29

AbN
automation

(b) Output side

Division	Model	Output format	No. of points per module	Insulation method	Rated load voltage	Maximum load current		Output response time		Output display	Surge suppressor	External connection	Common connection	Internal current consumption	External dimensions	Reference
						1 point	1 common	OFF → ON	ON → OFF							
Output side	AJ65SBTC1-32DT	Transistor output ＊13 (sink type)	16 points	Photocoupler insulation	24 VDC	0.1A	1.6A	0.5ms or less	1.5ms or less	LED display	Zener diode	1-wire one-touch connector	32 points 1 common (shared with input)	See input side		
	AJ65SBTC1-32DT1															
	AJ65SBTC1-32DT2	Transistor output ＊12 (sink type)														
	AJ65SBTC1-32DT3															
	AJ65SBTC4-16DT	Transistor output ＊13 (sink type)	8 points			0.5A	2.4A					4-wire one-touch connector	16 points 1 common (shared with input)			
	AJ65SBTC4-16DT2	Transistor output ＊12 (sink type)														
	AJ65SBTW4-16DT	Transistor output ＊13 (sink type)										4-wire waterproof connector				
	AJ65SBTB1-16DT		8 points									1-wire terminal block	16 points 1 common (shared with input)			
	AJ65SBTB1-32DT		16 points				3.6A						32 points 1 common (shared with input)			
	AJ65SBTB1-16DT1		8 points				2.4A						16 points 1 common (shared with input)			
	AJ65SBTB1-32DT1		16 points				3.6A						32 points 1 common (shared with input)			
	AJ65DBTB1-32DT1	Transistor output ＊12 (sink type)			12/24 VDC		4A						16 points 1 common			
	AJ65SBTB1-32DTE1	Transistor output ＊12 (source type)			24 VDC		3.6A						32 points 1 common (shared with input)			
	AJ65SBTB1-16DT2	Transistor output ＊12 (sink type)	8 points				2.4A						16 points 1 common (shared with input)			
	AJ65SBTB1-32DT2		16 points				3.6A						32 points 1 common (shared with input)			
	AJ65SBTB1-32KDT2															
	AJ65SBTB1-16DT3		8 points				2.4A						16 points 1 common (shared with input)			
	AJ65SBTB1-32DT3		16 points				3.6A						32 points 1 common (shared with input)			
	AJ65SBTB1-32KDT8				12 VDC											
	AJ65SBTB32-8DT	Transistor output ＊13 (sink type)	4 points		24 VDC		1.2A					Input 3-wire Output 2-wire terminal block	8 points 1 common (shared with input)			
	AJ65SBTB32-16DT		8 points				2.4A						16 points 1 common (shared with input)			
	AJ65SBTB32-8DT2	Transistor output ＊12 (sink type)	4 points				1.2A						8 points 1 common (shared with input)			
	AJ65SBTB32-16DT2		8 points				2.4A						16 points 1 common (shared with input)			
	AJ65SBTB32-16KDT2															
	AJ65SBTB32-16KDT8				12 VDC											

＊12 : Leakage current when the transistor output is OFF (0.1mA or less)
＊13 : Leakage current when the transistor output is OFF (0.25mA or less)
＊14 : Leakage current when the transistor output is OFF (0.3mA or less)

1 - 30

Division	Model	Output format	No. of points per module	Insulation method	Rated load voltage	Maximum load current		Output response time		Output display	Surge suppressor	External connection	Common connection	Internal current consumption	External dimensions	Reference
						1 point	1 common	OFF → ON	ON → OFF							
Output side	AJ65SBTB32-16DR	Contact output	8 points	Relay insulation	24 VDC 240 VAC	2A	4A	10ms or less	12ms or less	LED display	None	Input 3-wire Output 2-wire terminal block	4 points 1 common	See input side		
	AJ65SBTB32-16KDR															
	AJ65DBTB1-32DR		16 points	Photocoupler insulation								1-wire terminal block	8 points 1 common			
	AJ65SBTCF1-32DT	Transistor output ＊12 (sink type)	16 points		12/24 VDC	0.1A	1.6A	0.5ms or less	1.5ms or less		Zener diode	1-wire FCN connector	16 points 1 common			
	AJ65VBTCF1-32DT1							1ms or less	1ms or less							
	AJ65VBTCFJ1-32DT1															
	AJ65FBTA42-16DT	Transistor output ＊13 (sink type)	8 points		24 VDC	0.5A	2.4A	0.5ms or less	1.5ms or less			2-wire waterproof connector	8 points 1 common (shared with input)			
	AJ65FBTA42-16DTE	Transistor output ＊14 (source type)				1.0A	4.0A									
	AJ65VBTS32-16DT	Transistor output ＊12 (sink type)				0.5A		1ms or less	1ms or less			Spring clamp terminal block 2-wire type	16 points 1 common (shared with input)			
	AJ65VBTS32-32DT		16 points		12/24 VDC								16 points 1 common			
	AJ65VBTCE32-16DT		8 points		24 VDC	0.1A	0.8A					Sensor connector (e-CON) 2-wire type	16 points 1 common (shared with input)			
	AJ65VBTCE32-32DT		16 points				1.6A						32 points 1 common (shared with input)			
	AJ65VBTCE3-16DTE	Transistor output ＊12 (source type)	8 points				0.8A					Sensor connector (e-CON) 3-wire type	16 points 1 common (shared with input)			
	AJ65VBTCE3-32DTE		16 points				1.6A						32 points 1 common (shared with input)			

＊12 : Leakage current when the transistor output is OFF (0.1mA or less)
＊13 : Leakage current when the transistor output is OFF (0.25mA or less)
＊14 : Leakage current when the transistor output is OFF (0.3mA or less)

1 - 31

AbN
automation

1.5 Parts Sold Separately

Plugs for one-touch connector type modules are sold separately.
Please purchase them as necessary.

	Mitsubishi Electric product model name	Part model name (manufacturer)	Specifications			Color of the cover
			Applicable cable size (core)	Applicable cable size (diameter)	Maximum rated current	
Plug for one-touch connector ＊1	A6CON-P214	33104-6000FL (3M Japan Limited)	0.14 to 0.2mm^2 (26 to 24 AWG)	ϕ1.0 to 1.4mm	2A ＊5	Transparent
	A6CON-P220	33104-6100FL (3M Japan Limited)		ϕ1.4 to 2.0mm		Yellow
	A6CON-P514	33104-6200FL (3M Japan Limited)	0.3 to 0.5mm^2 (22 to 20 AWG)	ϕ1.0 to 1.4mm	3A ＊5	Red
	A6CON-P520	33104-6300FL (3M Japan Limited)		ϕ1.4 to 2.0mm		Blue
One-touch connector for communication ＊2	A6CON-L5P	35505-6000-BOM GF (3M Japan Limited)	Communication line 0.5mm^2 (20 AWG)	ϕ2.2 to 3.0mm		Red
			Shielded cable 0.5mm^2 (20 AWG)			
One-touch connector for power supply and FG ＊2 ＊4	A6CON-PW5P	35505-6080-A00 GF (3M Japan Limited)	0.75mm^2 (0.66 to 0.98mm^2) (18 AWG) Wire diameter: 0.16mm or more Insulating coating material: PVC (heat-resistant)	ϕ2.2 to 3.0mm	7A ＊5	Gray
	A6CON-PW5P-SOD	35505-6180-A00 GF (3M Japan Limited)		ϕ2.0 to 2.3mm		Blue
Dustproof cap ＊1	A6CAP-DC1	—	(AJ65SBTW□-16□ only)		—	—
Waterproof cap ＊1	A6CAP-WP1	—	Protection construction : IP67 (AJ65SBTW□-16□ only)		—	—
	A6CAP-WP2		Protection of degree : IP67 (AJ65FBTA□-16□ only)		—	—
FCN connector	A6CON1	—	Soldering type (Straight-out type)		—	—
	A6CON2		Crimp-contact type (Straight-out type)		—	—
	A6CON3		Pressure-displacement type (Flat cable type)		—	—
	A6CON4		Soldering type (Straight-out/diagonal-out type)		—	—
Online connector for communication ＊3	A6CON-LJ5P	35720-L200-B00 AK (3M Japan Limited)	—		—	—
Online connector for power supply and FG ＊3	A6CON-PWJ5P	35720-L200-A00 AK (3M Japan Limited)	—		—	—
One-touch connector plug with terminating resistor (1 piece)	A6CON-TR11	—	With terminating resistor (110Ω)		—	—
	A6CON-TR11N		With terminating resistor (110Ω) (built-in type)		—	—
Metal installation fitting for the connector type module (set of 5)	A6PLT-J65V1	—	For modules with a width of 41mm (AJ65VBTCU□-8□, AJ65VBTCU□-32□, AJ65VBTCU-68□) 10 M4×8 SWPW attached hole section screws		—	—
	A6PLT-J65V2	—	For modules with a width of 60mm (AJ65VBTCU□-16□) 10 M4×8 SWPW attached hole section screws		—	—

＊1 The A6CON-P□□□ and A6CAP-□□□ (manufactured by Mitsubishi Electric) are available in packs of 20 pieces.
＊2 The A6CON-□5P (manufactured by Mitsubishi Electric) is available in packs of 10 pieces.
＊3 The A6CON-□J5P (manufactured by Mitsubishi Electric) is available in packs of 5 pieces.
＊4 Check the outside diameter of an applicable cable and select a connector.
＊5 Keep the current within the allowable range of the connected cable.

	Mitsubishi Electric product model name	Applicable module			
Protective cover for the compact type remote I/O module (10 pieces)	A6CVR-8	Input : AJ65SBTB1-8D Output : AJ65SBTB1-8T	AJ65SBTB1-8TE	AJ65SBTB1-8T1	
		Repeater : AJ65SBT-RPT			
	A6CVR-16	Input : AJ65SBTB1-16D	AJ65SBTB1-16D1	AJ65SBTC1-32D	AJ65SBTC1-32D1
		AJ65SBTC4-16D	AJ65SBTC4-16DN	AJ65SBTC4-16DE	AJ65SBTB3-8D
		AJ65SBTB2-8A	AJ65SBTB2N-8A		
		Output : AJ65SBTB1-16T	AJ65SBTC1-32T	AJ65SBTB1-16T1	AJ65SBTC1-32T1
		AJ65SBTB2-8T	AJ65SBTB1-16TE	AJ65SBTB2-8R	AJ65SBTB2-8S
		AJ65SBTB2N-8R	AJ65SBTB2N-8S	AJ65SBTB2-8T1	
		Combined : AJ65SBTC1-32DT	AJ65SBTC1-32DT1	AJ65SBTC4-16DT	AJ65SBTB1-6DT
		AJ65SBTB1-16DT1	AJ65SBTB1-16DT2	AJ65SBTB32-8DT	AJ65SBTC1-32DT2
		AJ65SBTC1-32DT3	AJ65SBTC4-16DT2	AJ65SBTB1-16DT3	AJ65SBTB32-8DT2
		Optical Repeater : AJ65SBT-RPS	AJ65SBT-RPG		
	A6CVR-32	Input : AJ65SBTB1-32D	AJ65SBTB1-32KD	AJ65SBTB1-32D1	AJ65SBTB1-32D5
		AJ65SBTB2-16A	AJ65SBTB2N-16A	AJ65SBTB3-16D	AJ65SBTB3-16KD
		AJ65SBTB3-16D5			
		Output : AJ65SBTB1-32T	AJ65SBTB1-32T1	AJ65SBTB1B-16TE1	AJ65SBTB1-32TE1
		AJ65SBTB2-16T	AJ65SBTB2-16R	AJ65SBTB2-16S	AJ65SBTB2N-16R
		AJ65SBTB2N-16S	AJ65SBTB2-16T1		
		Combined : AJ65SBTB1-32DT	AJ65SBTB1-32DT1	AJ65SBTB1-32DTE1	AJ65SBTB1-32DT2
		AJ65SBTB1-32KDT2	AJ65SBTB32-16DT	AJ65SBTB1-32DT3	AJ65SBTB1-32KDT8
		AJ65SBTB32-16DT2	AJ65SBTB32-16KDT2	AJ65SBTB32-16KDT8	AJ65SBTB32-16DR
		AJ65SBTB32-16KDR			
	A6CVR-VCE8	Input : AJ65VBTCE3-8D			
		Output : AJ65VBTCE2-8T			
	A6CVR-VCE16	Input : AJ65VBTCE3-16D	AJ65VBTCE3-16DE		
		Output : AJ65VBTCE2-16T	AJ65VBTCE3-16TE		
		Combined : AJ65VBTCE32-16DT	AJ65VBTCE3-16DTE		
	A6CVR-VS16	Input : AJ65VBTS3-16D			
		Output : AJ65VBTS2-16T			
		Combined : AJ65VBTS32-16DT			
DIN adapter	A6DIN1C	Input : AJ65DBTB1-32D			
		Output : AJ65DBTB1-32T1	AJ65DBTB1-32R		
		Combined : AJ65DBTB1-32DT1	AJ65DBTB1-32DR		
Common terminal block	A2CCOM-TB	Input : AJ65DBTB1-32D			
		Output : AJ65DBTB1-32T1	AJ65DBTB1-32R		
		Combined : AJ65DBTB1-32DT1	AJ65DBTB1-32DR		

AbN
automation

1.6 Recommended Connection Device List

1.6.1 Recommended connection devices for low profile waterproof remote I/O module

The following shows communication devices needed for use of the low profile waterproof type remote I/O module (AJ65FBTA□-16□).

(1) Communications Module Waterproof Plug (Male / Female)･･･4-pin / 5-pin can be used.

(a) For LINK In Side (Female)

Model name	Maker	Specifications	Connection cable diameter
ELKA 4012 PG9	HIRSCHMANN	M12-4-pin Female Straight Type	ϕ6.0 to 8.0mm
ELKA 5012 PG9	HIRSCHMANN	M12-5-pin Female Straight Type	ϕ6.0 to 8.0mm
CM02A-8DP5S(03)	DDK Ltd.	M12-4-pin Female Straight Type	ϕ7.2 to 7.9mm
ELWIKA 4012 PG9	HIRSCHMANN	M12-4-pin Female Right-angle Type	ϕ6.0 to 8.0mm
ELWIKA 5012 PG9	HIRSCHMANN	M12-5-pin Female Right-angle Type	ϕ6.0 to 8.0mm

(b) For LINK OUT Side (Male)

Model name	Maker	Specifications	Connection cable diameter
ELST 4012 PG9	HIRSCHMANN	M12-4-pin Male Straight Type	ϕ6.0 to 8.0mm
ELST 5012 PG9	HIRSCHMANN	M12-5-pin Male Straight Type	ϕ6.0 to 8.0mm
CM02A-8DJ5P(03)	DDK Ltd.	M12-4-pin Female Straight Type	ϕ7.2 to 7.9mm
ELWIST 4012 PG9	HIRSCHMANN	M12-4-pin Male Right-angle Type	ϕ6.0 to 8.0mm
ELWIST 5012 PG9	HIRSCHMANN	M12-5-pin Male Right-angle Type	ϕ6.0 to 8.0mm

(2) Power Supply Module - Waterproof Plug (Female)･･･5-pin only can be used.

Model name	Maker	Specifications	Connection cable diameter
ELKA 5012 PG7	HIRSCHMANN	M12-5-pin Female Straight Type	ϕ4.0 to 6.0mm
ELKA 5012 PG9			ϕ6.0 to 8.0mm
ELWIKA 5012 PG7	HIRSCHMANN	M12-5-pin Female Right-angle Type	ϕ4.0 to 6.0mm
ELWIKA 5012 PG9			ϕ6.0 to 8.0mm

(3) I/O connector waterproof plug (male)･･･4-pin/5-pin can be used. The plug for LINK OUT side (male) mentioned in Section (1) (b) can be used.

(4) I/O Connector Y Branch Connector

Model name	Maker	Remarks
SAC-3P-M12Y	PHOENIX CONTACT GmbH & Co. KG	—
SAC-5P-M12Y		
XS2R series	OMRON Corporation	—
VA-4YG-2	CORRENS Corporation	—

(5) CC-Link Cable

Model name	Maker	Remarks
FA-CBL series	MITSUBISHI ELECTRIC ENGINEERING Co.,Ltd	CC-Link dedicated cable with waterproof connector
Cable with M12 Connector	Shinwa Co.,Ltd	The CA series cannot be used.

1.6.2 Recommended connection devices for low profile sensor connector (e-CON) remote I/O module

The following shows communication devices needed for use of the sensor connector (e-CON) remote I/O module (AJ65VBTCE□-□□).
For how to wire the sensor connector (e-CON), refer to the catalog of the corresponding maker.

(1) I/O sensor connector (e-CON) plug ∗1

Model name	Maker	Specifications			Color of the cover
		Applicable cable size (core)	Applicable cable size (diameter)	Maximum rated current	
ECN-A014R	(Mitsubishi Electric System Service Co., Ltd.)	0.08 to 0.20mm^2 (28 to 24 AWG)	ϕ0.9 to 1.0mm	2A ∗ 2	Red
ECN-A004Y		0.20 to 0.30mm^2 (24 to 22 AWG)	ϕ1.0 to 1.15mm		Yellow
ECN-A024BL		0.30 to 0.50mm^2 (22 to 20 AWG)	ϕ1.15 to 1.3mm		Blue
ECN-M014R		0.14 to 0.30mm^2 (26 to 24 AWG)	ϕ0.8 to 1.0mm		Red
ECN-M024Y			ϕ1.0 to 1.2mm		Yellow
ECN-M034OR			ϕ1.2 to 1.6mm		Orange
ECN-M044GN		0.30 to 0.50mm^2 (22 to 20 AWG)	ϕ1.0 to 1.2mm		Green
ECN-M054BL			ϕ1.2 to 1.6mm		Blue
ECN-M064GY			ϕ1.6 to 2.0mm		Gray

∗1 The ECN-□□□□ is available in packs of 20 pieces.

∗2 Keep the current within the allowable range of the connected cable.

AbN
automation

1.7 About the Generic, Abbreviated and Technical Terms Used in This Manual

The abbreviated and technical terms used in this manual are listed below:

Generic/abbreviated/ technical term	Description
Master/local module	Generic term for the AJ61BT11, A1SJ61BT11, AJ61QBT11, A1SJ61QBT11, QJ61BT11, QJ61BT11N, L26CPU-BT, L26CPU-PBT, LJ61BT11, and RJ61BT11 CC-Link system master/local modules
Compact remote I/O module	Generic term for the AJ65SBT□□-□□ CC-Link system compact remote I/O modules
Conventional remote I/O module	Generic term for the AJ65BT□□-□□ CC-Link system remote I/O modules
Remote I/O module	Generic term for the AJ65BT□□-□□/AJ65SBT□□-□□/AJ65V□□-□□/AJ65F□□-□□ CC-Link system remote I/O modules
Input module	Generic term for the AJ65SBT□□-□A/D(1) remote I/O modules
Output module	Generic term for the AJ65SBT□□-□R/T /T1/TE remote I/O modules
Combined module	Generic term for the AJ65SBT□□-□DT(1) remote I/O modules
Waterproof type remote I/O module	Generic term for the AJ65SBTW4-16□ remote I/O modules
Low profile waterproof type remote I/O module	Generic term for the AJ65FBTA□-16□ remote I/O modules
Spring clamp terminal block type remote I/O module	Generic term for the AJ65VBTS□-□□ remote I/O modules
Sensor connector (e-CON) type remote I/O module	Generic term for the AJ65VBTCE□-□□ remote I/O modules

2 NAMES AND SETTINGS FOR EACH PART

The names and settings for the components of the compact remote I/O module are shown below:

AJ65SBTB1-8 ☐ (Terminal-block 8 point module, 1-wire)

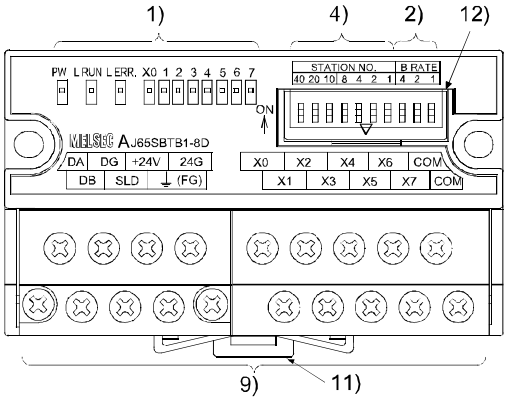

AJ65SBTB1-16 ☐ (Terminal-block 16 point module, 1-wire)

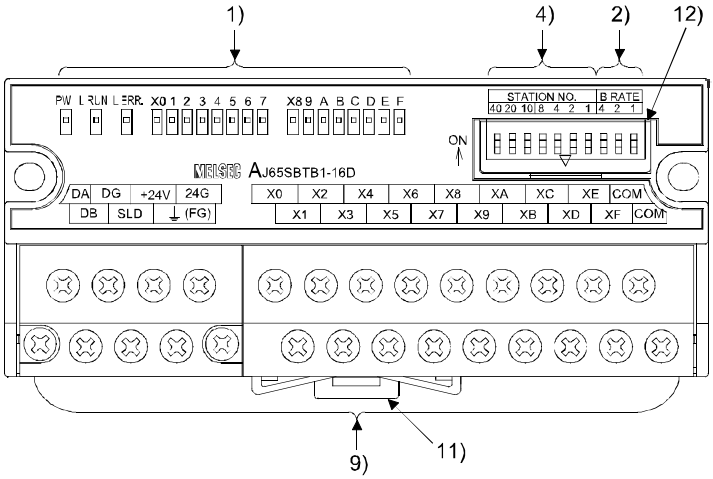

AJ65SBTB1B-16 ☐ (Module with 1-wire terminal block, 2-common type, and 16 points)

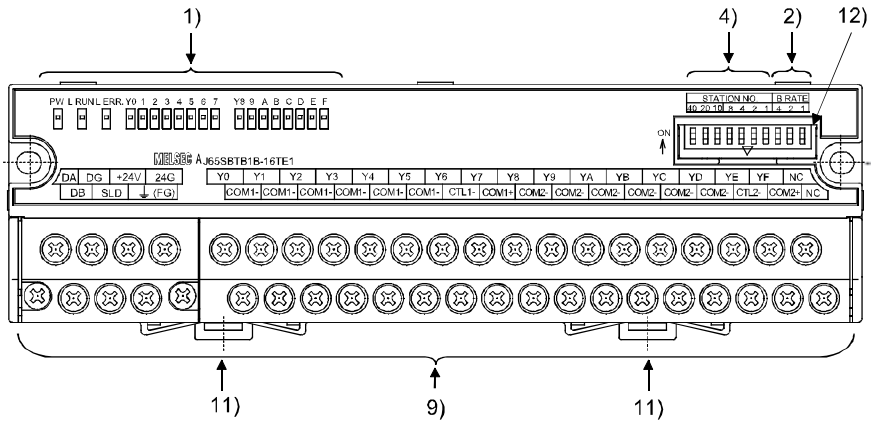

2 - 1

AbN
automation

AJ65SBTB1-32 ☐ (Terminal-block 32 point module, 1-wire)

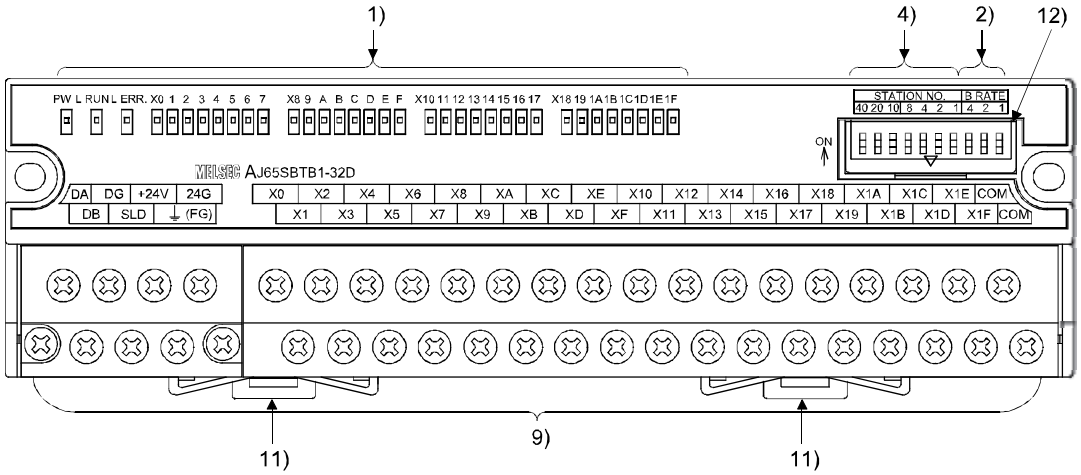

AJ65SBTB1-32K ☐ (Terminal-block 32 point module, 1-wire)

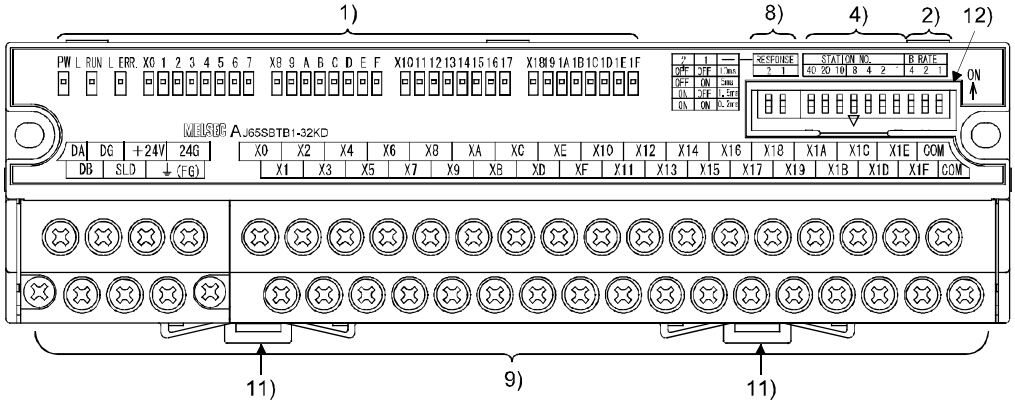

AJ65SBTC1-32 ☐ (One-touch connector 32 point module, 1-wire)

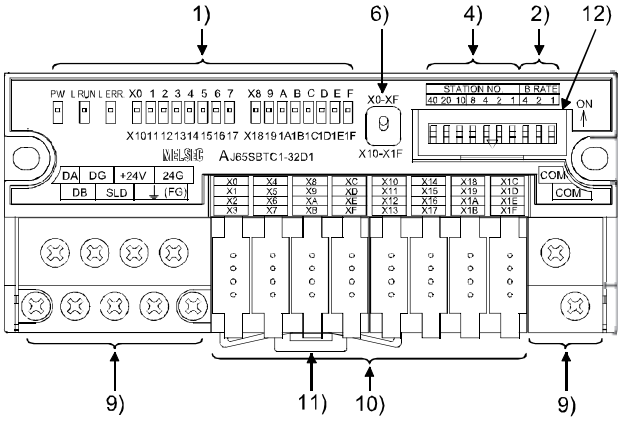

2 - 2

AJ65SBTC4-16 ☐ (One-touch connector 16 point module, 4-wire)

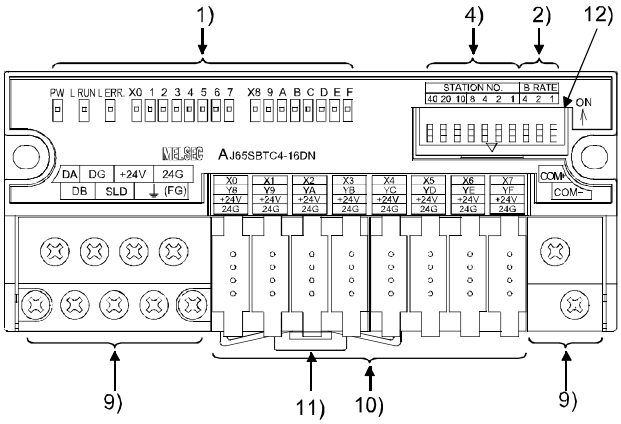

(AJ65SBTC4-16D only)

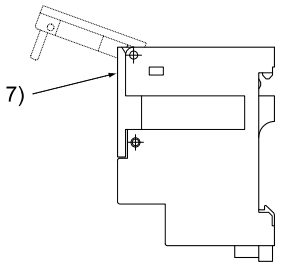

AJ65SBTCF1-32 ☐ (Terminal block 32 point module, 1-wire FCN 40-pin connector)

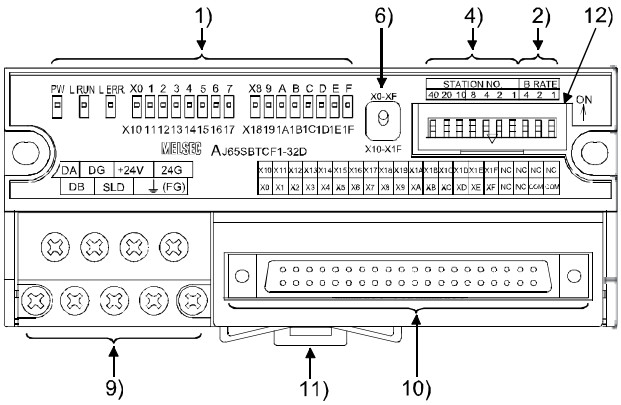

AbN
automation

AJ65SBTB2N-8 ☐ (Terminal block 8 point module, 2-wire)

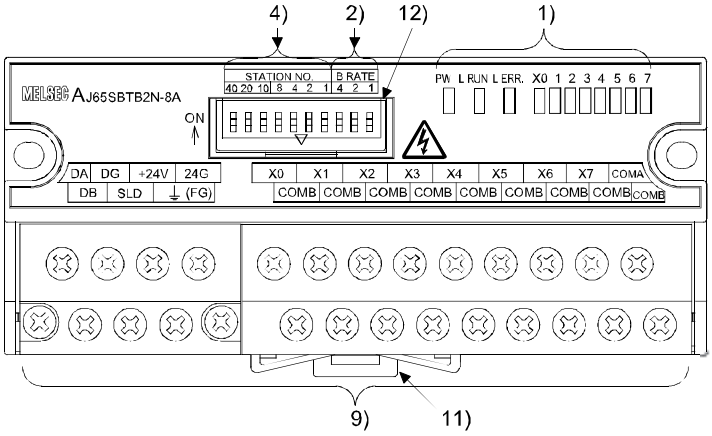

AJ65SBTB2N-16 ☐ (Terminal block 16 point module, 2-wire)

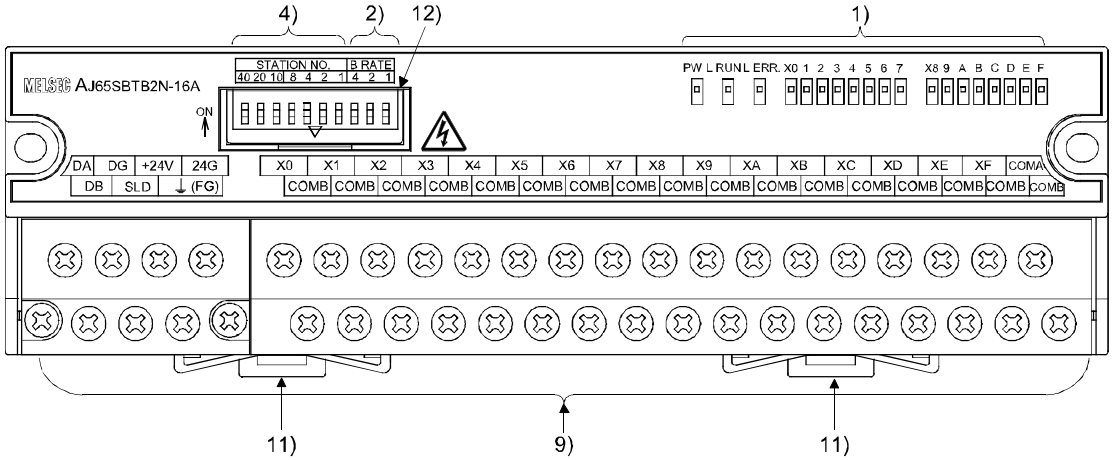

AJ65SBTB2-8 ☐ (Terminal block 8 point module, 2-wire)

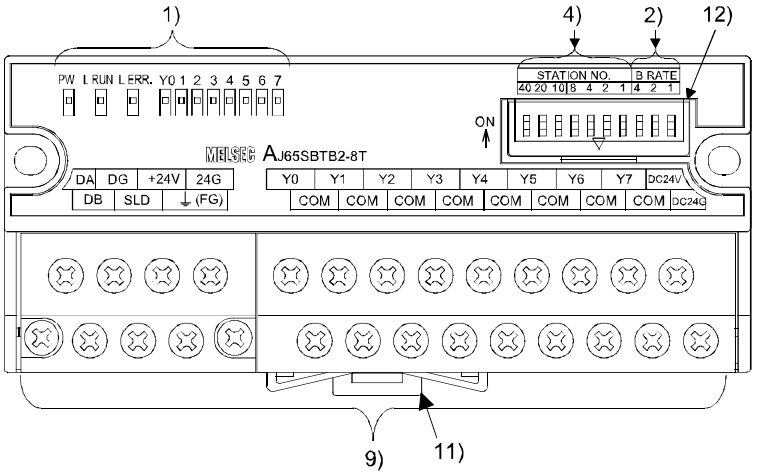

2 - 4

AJ65SBTB2-16 ☐ (Terminal block 16 point module, 2-wire)

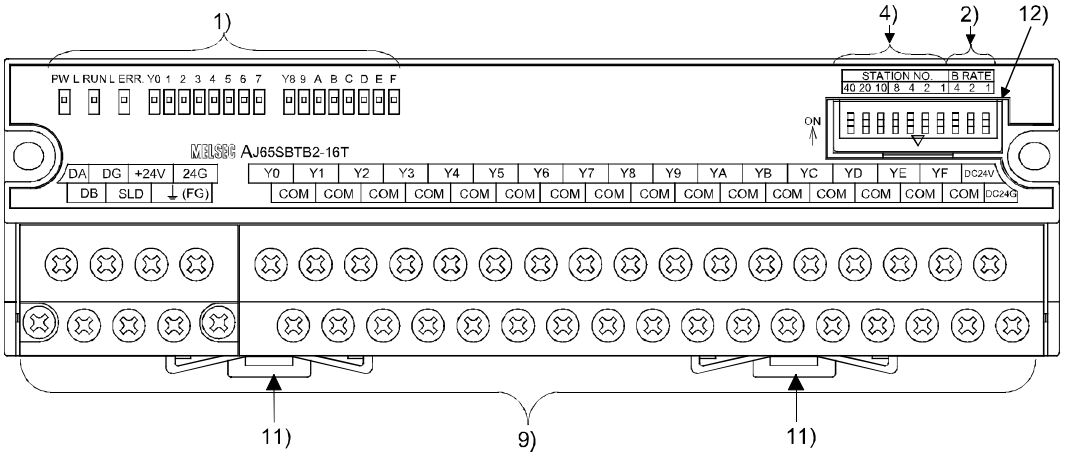

AJ65SBTB3-8 ☐ (Terminal block 8 point module, 3-wire)

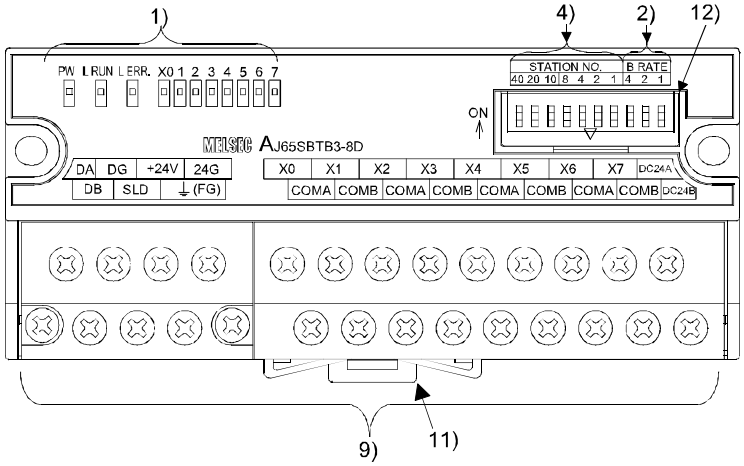

AJ65SBTB3-16 ☐ (Terminal block 16 point module, 3-wire)

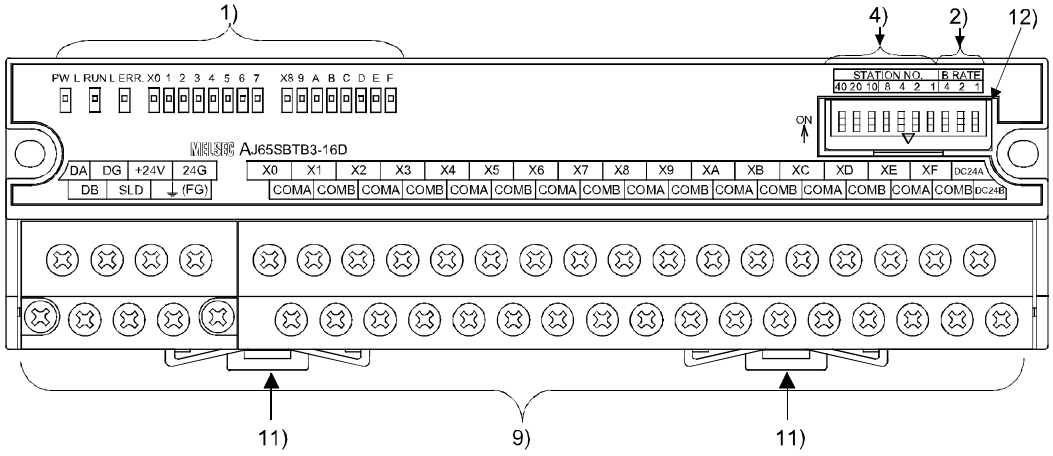

AbN
automation

AJ65SBTB3-16K ☐ (Terminal block 16 point module, 3-wire)

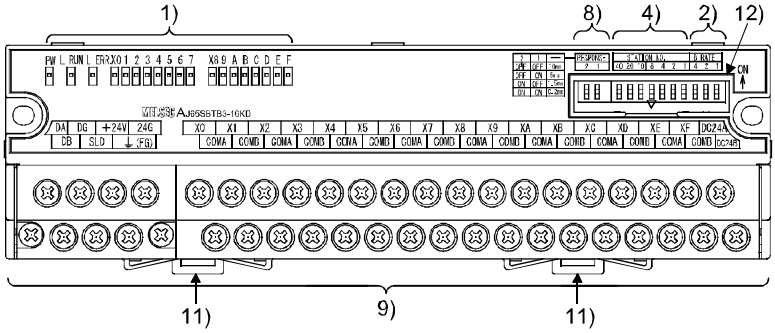

AJ65SBTB32-8 ☐ (Terminal block 8 point module, 3-wire input, 2-wire output)

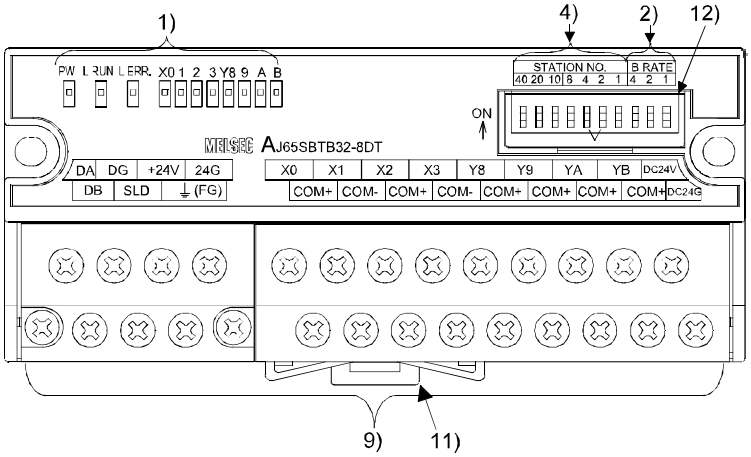

AJ65SBTB32-16 ☐ (Terminal block 16 point module, 3-wire input, 2-wire output)

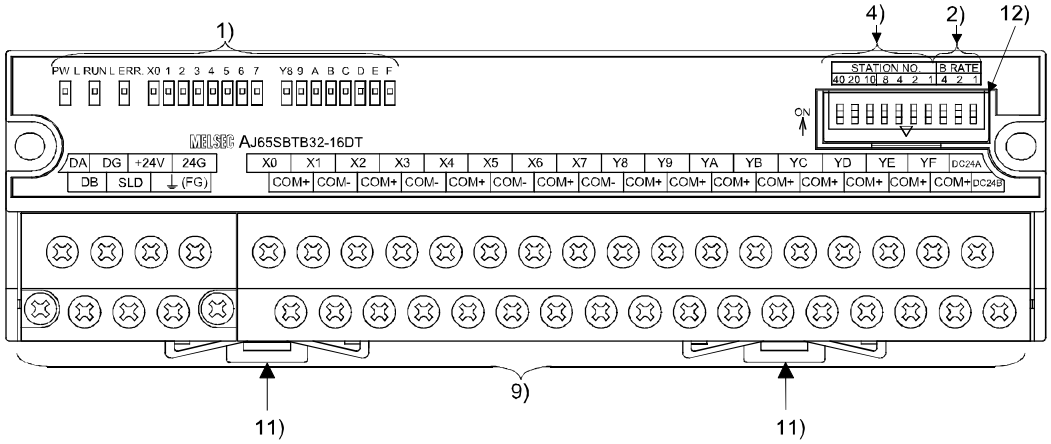

2 - 6

AJ65SBTB32-16K □ (Terminal block 16 point module, 3-wire input, 2-wire output)

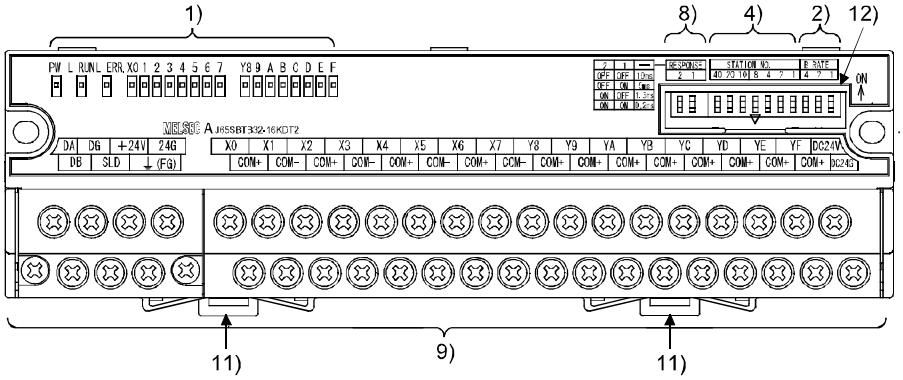

AJ65SBTB32-16DR (Terminal block 16 point module, 3-wire input, 2-wire output)

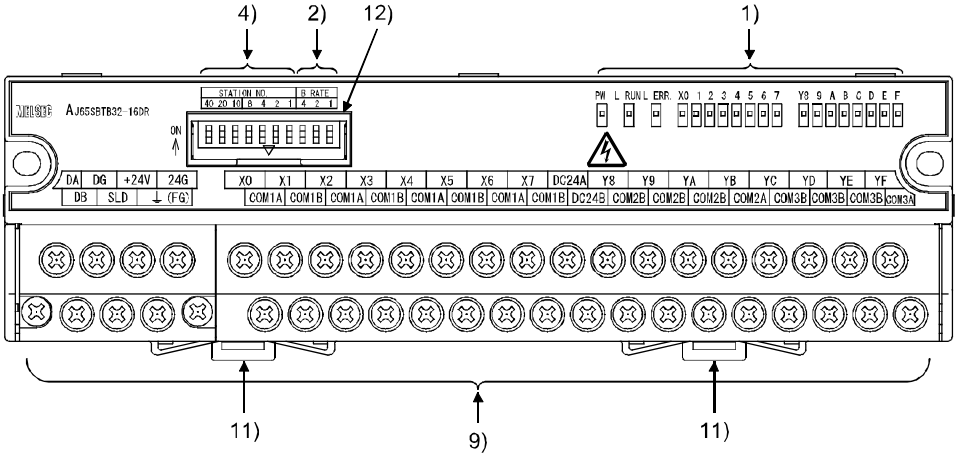

AJ65SBTB32-16KDR (Terminal block 16 point module, 3-wire input, 2-wire output)

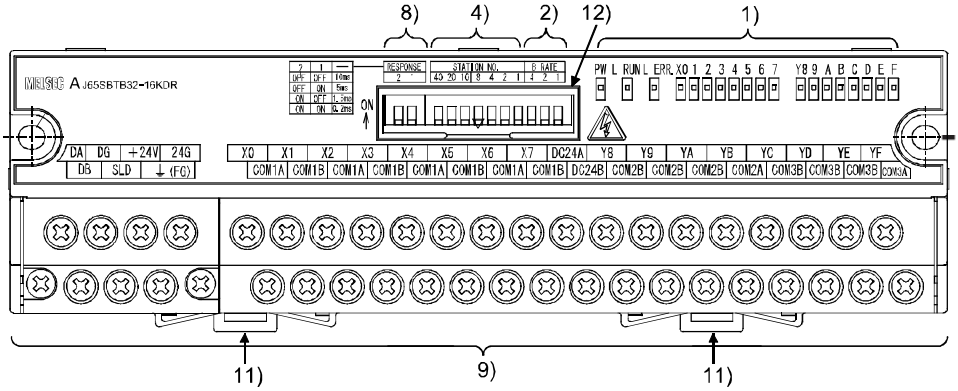

AJ65DBTB1-32 ☐ (Terminal block 32 point module, 1-wire)

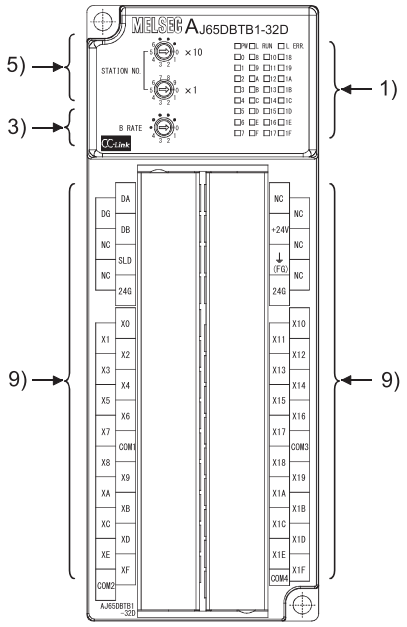

No.	Item	Description	
1)	Operation status indicator LED	LED name	Details
		PW	On: Power being supplied Off: No power supplied
		L RUN	On: Normal communication Off: No communication (timeout error)
		L ERR.	On: Communication error Flashing regularly: The station number or transmission speed switch setting is changed while power is on. Flashing irregularly: The terminating resistor setting is incorrect. The module or CC-Link dedicated cable is affected by noise. Off: Normal communication
		X0 to 1F Y0 to 1F	On: Input/output ON Off: Input/output OFF

<table>
<tr><th>No.</th><th>Item</th><th>Description</th></tr>
<tr><td>2)</td><td>Transmission speed setting switch</td><td>
<table>
<tr><th rowspan="2">Setting</th><th colspan="3">Switch status</th><th rowspan="2">Transmission speed</th></tr>
<tr><th>4</th><th>2</th><th>1</th></tr>
<tr><td>0</td><td>OFF</td><td>OFF</td><td>OFF</td><td>156kbps</td></tr>
<tr><td>1</td><td>OFF</td><td>OFF</td><td>ON</td><td>625kbps</td></tr>
<tr><td>2</td><td>OFF</td><td>ON</td><td>OFF</td><td>2.5 Mbps</td></tr>
<tr><td>3</td><td>OFF</td><td>ON</td><td>ON</td><td>5.0 Mbps</td></tr>
<tr><td>4</td><td>ON</td><td>OFF</td><td>OFF</td><td>10 Mbps</td></tr>
</table>
Set the transmission speed within the above range.</td></tr>
<tr><td>3)</td><td>Transmission speed setting switch</td><td>
<table>
<tr><th>Setting</th><th>Transmission speed</th></tr>
<tr><td>0</td><td>156kbps</td></tr>
<tr><td>1</td><td>625kbps</td></tr>
<tr><td>2</td><td>2.5 Mbps</td></tr>
<tr><td>3</td><td>5.0 Mbps</td></tr>
<tr><td>4</td><td>10 Mbps</td></tr>
</table>
Set the transmission speed within the above range.</td></tr>
<tr><td>4)</td><td>Station number setting switch</td><td>Select "10", "20", or "40" for the tens place.
Select "1", "2", "4", or "8" for the ones place.
Set the station number within the range of 1 to 64.*1
<table>
<tr><th rowspan="2">Station number</th><th colspan="3">Tens place</th><th colspan="4">Ones place</th></tr>
<tr><th>40</th><th>20</th><th>10</th><th>8</th><th>4</th><th>2</th><th>1</th></tr>
<tr><td>1</td><td>OFF</td><td>OFF</td><td>OFF</td><td>OFF</td><td>OFF</td><td>OFF</td><td>ON</td></tr>
<tr><td>2</td><td>OFF</td><td>OFF</td><td>OFF</td><td>OFF</td><td>OFF</td><td>ON</td><td>OFF</td></tr>
<tr><td>3</td><td>OFF</td><td>OFF</td><td>OFF</td><td>OFF</td><td>OFF</td><td>ON</td><td></td></tr>
<tr><td>4</td><td>OFF</td><td>OFF</td><td>OFF</td><td>OFF</td><td>OFF</td><td>OFF</td><td>OFF</td></tr>
<tr><td>:</td><td>:</td><td>:</td><td>:</td><td>:</td><td>:</td><td>:</td><td>:</td></tr>
<tr><td>10</td><td>OFF</td><td>OFF</td><td>ON</td><td>OFF</td><td>OFF</td><td>OFF</td><td>OFF</td></tr>
<tr><td>11</td><td>OFF</td><td>OFF</td><td>ON</td><td>OFF</td><td>OFF</td><td>OFF</td><td>ON</td></tr>
<tr><td>:</td><td>:</td><td>:</td><td>:</td><td>:</td><td>:</td><td>:</td><td>:</td></tr>
<tr><td>64</td><td>ON</td><td>ON</td><td>OFF</td><td>OFF</td><td>ON</td><td>OFF</td><td>OFF</td></tr>
</table>
(Example) Setting the station number to 32:
<table>
<tr><th rowspan="2">Station number</th><th colspan="3">Tens place</th><th colspan="4">Ones place</th></tr>
<tr><th>40</th><th>20</th><th>10</th><th>8</th><th>4</th><th>2</th><th>1</th></tr>
<tr><td>32</td><td>OFF</td><td>ON</td><td>ON</td><td>OFF</td><td>OFF</td><td>ON</td><td>OFF</td></tr>
</table></td></tr>
</table>

AbN
automation

<table>
<tr><th>No.</th><th>Item</th><th>Description</th></tr>
<tr><td>5)</td><td>Station number setting switch</td><td>Set the station number within the range of 1 to 64.*1
• Use "×10" for the tens place.
• Use "×1" for the ones place.</td></tr>
<tr><td>6)</td><td>Indication selector switch*3</td><td>When the switch is set to "X0-XF", LEDs indicate the ON/OFF status of X0 to XF.
When the switch is set to "X10-X1F", LEDs indicate the ON/OFF status of X10 to X1F.</td></tr>
<tr><td>7)</td><td>Sink/source switch
(For AJ65SBTC1-16D only)</td><td>Switches the input type (sink or source).
Open the module top cover to set the switch.
 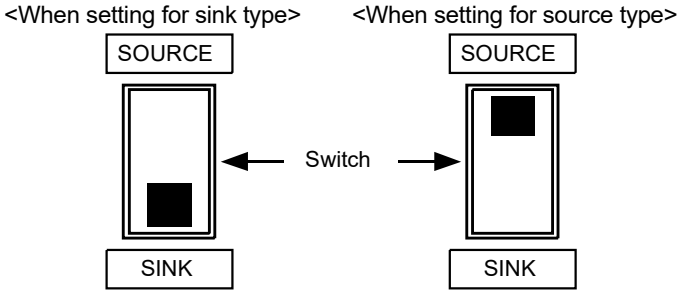
</td></tr>
<tr><td>8)</td><td>Input response speed switch</td><td><table>
<tr><th rowspan="2">Setting</th><th colspan="2">Switch status</th><th rowspan="2">Input response speed</th></tr>
<tr><th>2</th><th>1</th></tr>
<tr><td>0</td><td>OFF</td><td>OFF</td><td>10ms</td></tr>
<tr><td>1</td><td>OFF</td><td>ON</td><td>5ms</td></tr>
<tr><td>2</td><td>ON</td><td>OFF</td><td>1.5ms</td></tr>
<tr><td>3</td><td>ON</td><td>ON</td><td>0.2ms</td></tr>
</table>
Default: 2 (1.5ms)*2</td></tr>
<tr><td>9)</td><td>Terminal block</td><td>Terminal block for module power supply, transmission, and I/O signals.</td></tr>
<tr><td>10)</td><td>Connector</td><td>Connector for I/O signals.</td></tr>
<tr><td>11)</td><td>DIN rail hook</td><td>When mounting the module to a DIN rail, push in the DIN rail hook until it clicks.</td></tr>
<tr><td>12)</td><td>Switch cover</td><td>The cover is designed to prevent unintended contact with the switches and to keep out dirt and dust. Close the cover when the switches are not in use, such as during power-on.</td></tr>
</table>

*1 A unique station number should be set.

*2 The switch setting is applied and held when the power is turned on.
Therefore, make any changes to the setting after turning off the power.

*3 Use your fingertip to adjust the indication selector switch. Avoid using tools such as screwdrivers, as they may damage the switch.

2 - 10

AJ65SBTW4-16 □ (waterproof connector 16 point module, 1-wire)

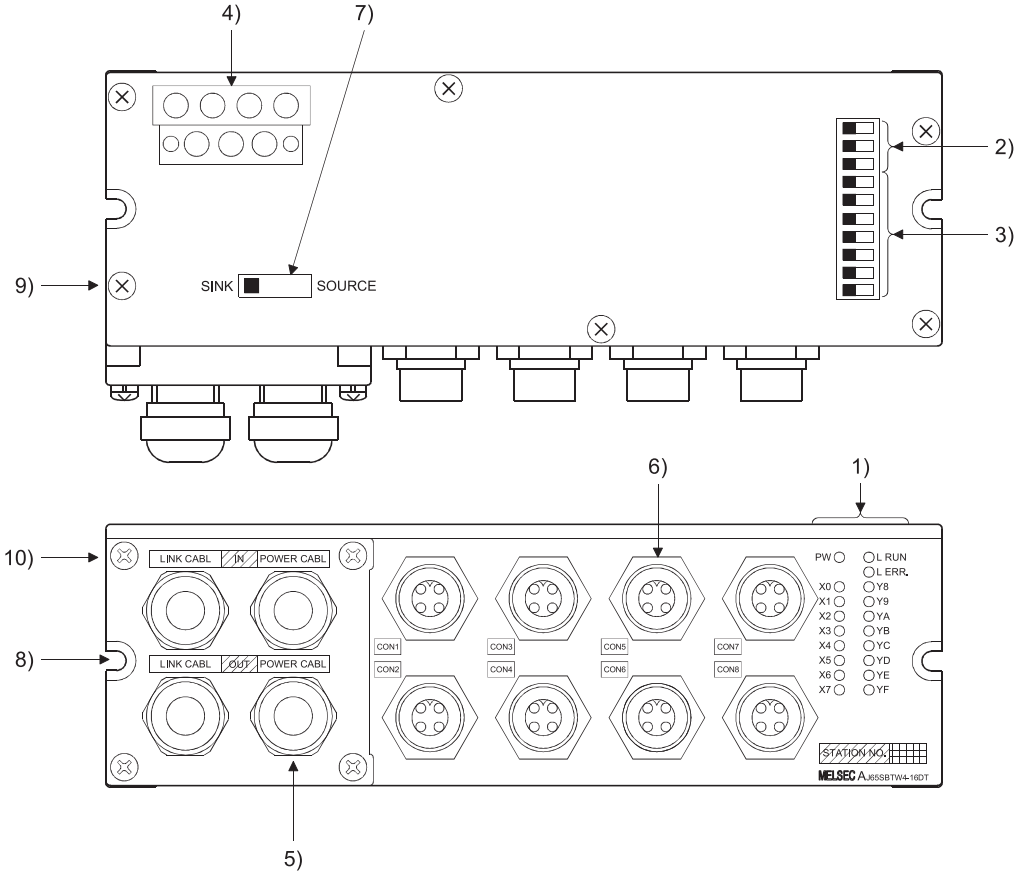

No.	Item	Description	
1)	Operating status indicator LED	LED name	Details
		PW	On: Power being supplied Off: No power supplied
		L RUN	On: Normal communication Off: No communication (timeout error)
		L ERR.	On: Communication error Flashing regularly: The station number or transmission speed switch setting is changed while power is on. Flashing irregularly: The terminating resistor setting is incorrect. The module or CC-Link dedicated cable is affected by noise. Off: Normal communication
		X0 to 7 Y8 to F	On: Input/output ON Off: Input/output OFF

AbN
automation

<table>
<tr><th>No.</th><th>Item</th><th>Description</th></tr>
<tr><td>2)</td><td>Transmission speed setting switch</td><td>
<table>
<tr><th rowspan="2">Setting</th><th colspan="3">Switch status</th><th rowspan="2">Transmission speed</th></tr>
<tr><th>4</th><th>2</th><th>1</th></tr>
<tr><td>0</td><td>OFF</td><td>OFF</td><td>OFF</td><td>156kbps</td></tr>
<tr><td>1</td><td>OFF</td><td>OFF</td><td>ON</td><td>625kbps</td></tr>
<tr><td>2</td><td>OFF</td><td>ON</td><td>OFF</td><td>2.5 Mbps</td></tr>
<tr><td>3</td><td>OFF</td><td>ON</td><td>ON</td><td>5.0 Mbps</td></tr>
<tr><td>4</td><td>ON</td><td>OFF</td><td>OFF</td><td>10 Mbps</td></tr>
</table>
Set the transmission speed within the above range.
Open the module top cover to set the transmission speed.</td></tr>
<tr><td>3)</td><td>Station number setting switch</td><td>Select "10", "20", or "40" for the tens place.
Select "1", "2", "4", or "8" for the ones place.
Set the station number within the range of 1 to 64.*1
<table>
<tr><th rowspan="2">Station number</th><th colspan="3">Tens place</th><th colspan="4">Ones place</th></tr>
<tr><th>40</th><th>20</th><th>10</th><th>8</th><th>4</th><th>2</th><th>1</th></tr>
<tr><td>1</td><td>OFF</td><td>OFF</td><td>OFF</td><td>OFF</td><td>OFF</td><td>OFF</td><td>ON</td></tr>
<tr><td>2</td><td>OFF</td><td>OFF</td><td>OFF</td><td>OFF</td><td>OFF</td><td>ON</td><td>OFF</td></tr>
<tr><td>3</td><td>OFF</td><td>OFF</td><td>OFF</td><td>OFF</td><td>OFF</td><td>ON</td><td></td></tr>
<tr><td>4</td><td>OFF</td><td>OFF</td><td>OFF</td><td>OFF</td><td>OFF</td><td>OFF</td><td>OFF</td></tr>
<tr><td>:</td><td>:</td><td>:</td><td>:</td><td>:</td><td>:</td><td>:</td><td>:</td></tr>
<tr><td>10</td><td>OFF</td><td>OFF</td><td>ON</td><td>OFF</td><td>OFF</td><td>OFF</td><td>OFF</td></tr>
<tr><td>11</td><td>OFF</td><td>OFF</td><td>ON</td><td>OFF</td><td>OFF</td><td>OFF</td><td>ON</td></tr>
<tr><td>:</td><td>:</td><td>:</td><td>:</td><td>:</td><td>:</td><td>:</td><td>:</td></tr>
<tr><td>64</td><td>ON</td><td>ON</td><td>OFF</td><td>OFF</td><td>ON</td><td>OFF</td><td>OFF</td></tr>
</table>
(Example) Setting the station number to 32:
<table>
<tr><th rowspan="2">Station number</th><th colspan="3">Tens place</th><th colspan="4">Ones place</th></tr>
<tr><th>40</th><th>20</th><th>10</th><th>8</th><th>4</th><th>2</th><th>1</th></tr>
<tr><td>32</td><td>OFF</td><td>ON</td><td>ON</td><td>OFF</td><td>OFF</td><td>ON</td><td>OFF</td></tr>
</table>
Open the module top cover to set the station number.</td></tr>
<tr><td>4)</td><td>Terminal block</td><td>Terminal block for module power supply and transmission circuit.</td></tr>
<tr><td>5)</td><td>Pipe for transmission or power supply line</td><td>Pipe for connecting a transmission cable or a power supply cable to the terminal block.
Open the module top cover to connect a transmission cable or a power supply cable to the terminal block.
Attach a waterproof plug provided with the product to the unused pipe.</td></tr>
<tr><td>6)</td><td>Waterproof connector for I/O</td><td>Waterproof connectors for I/O signals.
Attach an optional dustproof cap (A6CAP-DC1) to the unused waterproof connector.</td></tr>
<tr><td>7)</td><td>Sink/source switch
(For AJ65SBTW4-16D only)</td><td>Switches the input type (sink or source).
Open the module top cover to set the switch.
< When setting for sink type > < When setting for source type >
 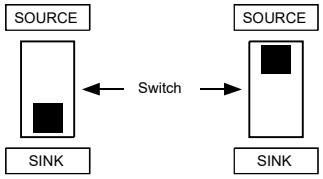
</td></tr>
<tr><td>8)</td><td>Metal fitting</td><td>FG terminal for module.</td></tr>
<tr><td>9)</td><td>Module top-cover installation screw (M3)</td><td rowspan="2">Refer to Section 7.1 for tightening torque value for installation screws.</td></tr>
<tr><td>10)</td><td>Module front-cover installation screw (M3)</td></tr>
</table>

*1 A unique station number should be set.

AJ65VBTCU □ -8 □ (One-touch connector 8 points module)

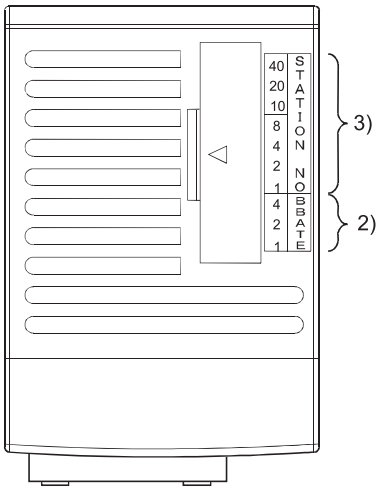

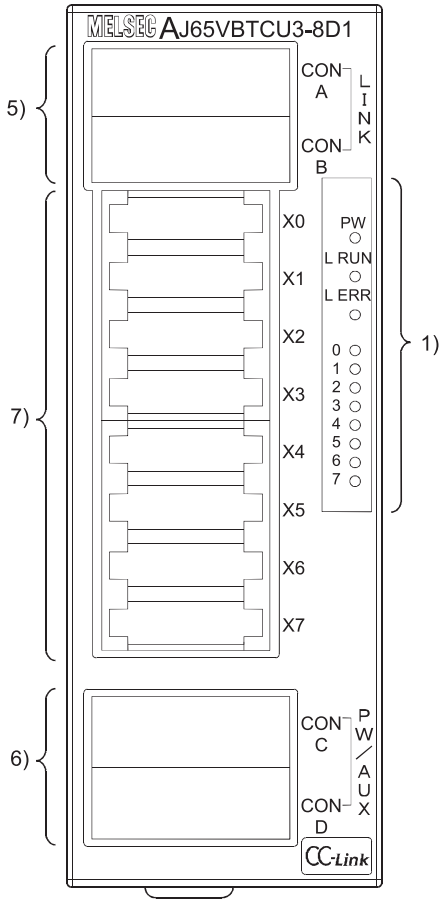

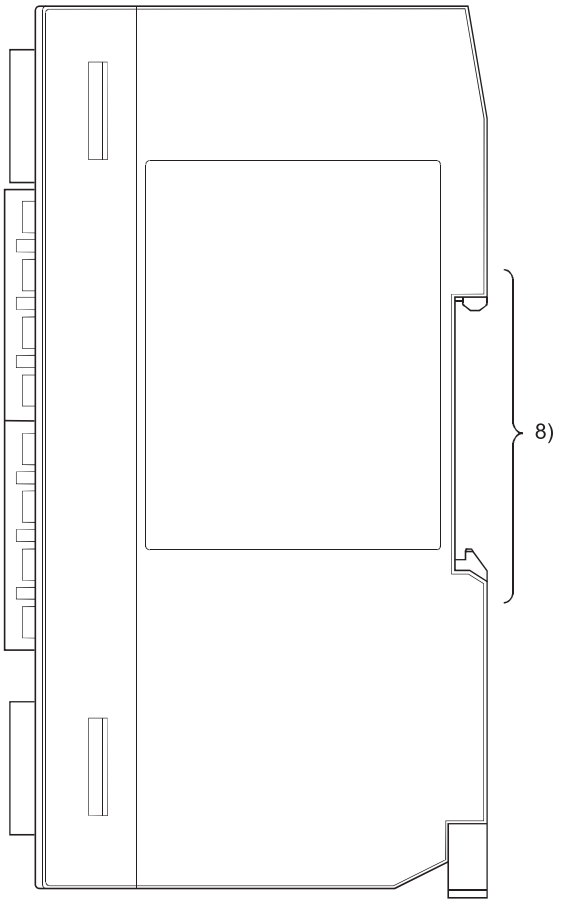

AbN
automation

AJ65VBTCU ☐ -16 ☐ (One-touch connector 16 points module)

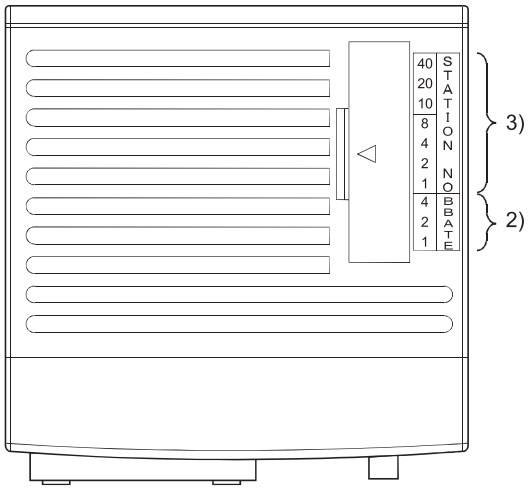

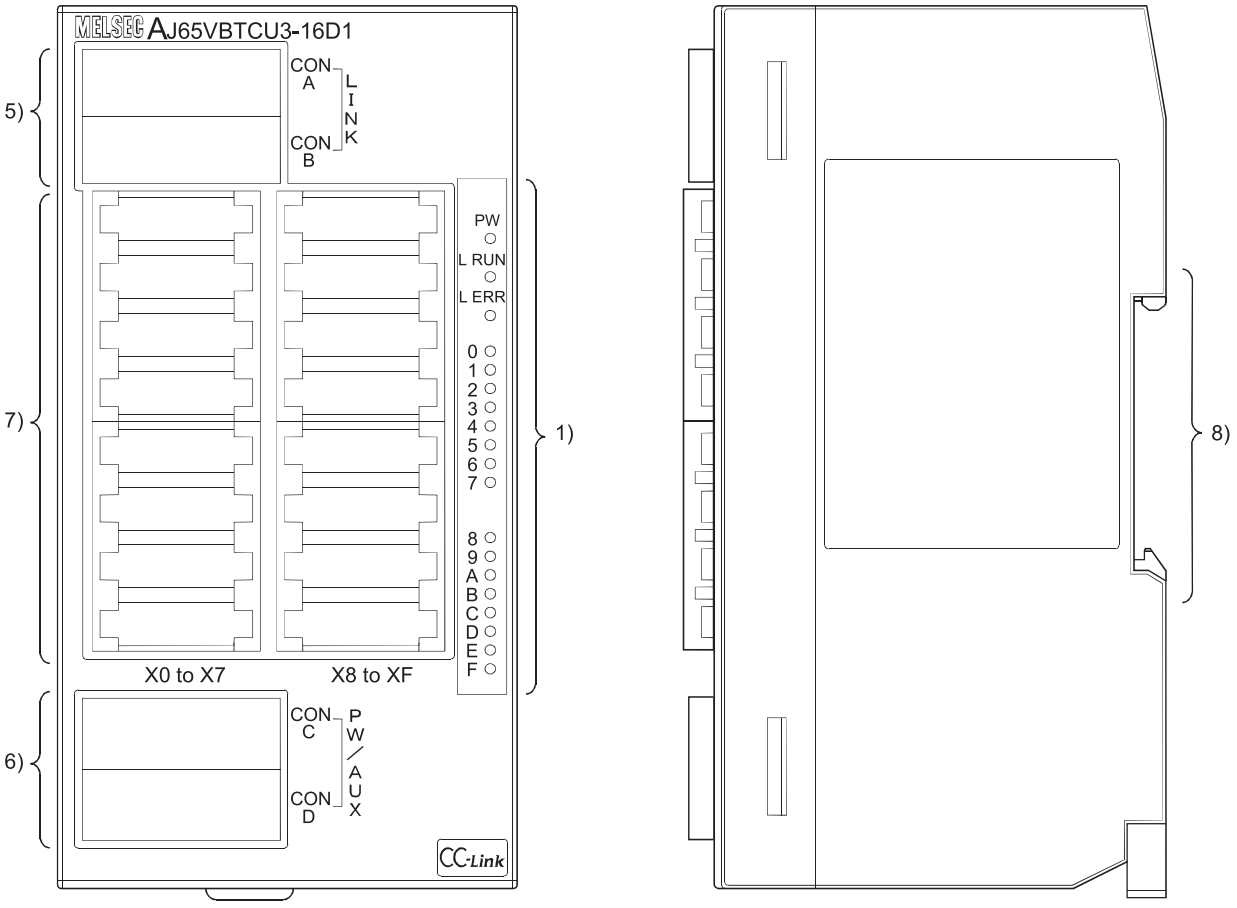

2 - 14

AJ65VBTCF1-32DT1 (1-wire FCN connector 32 points module)

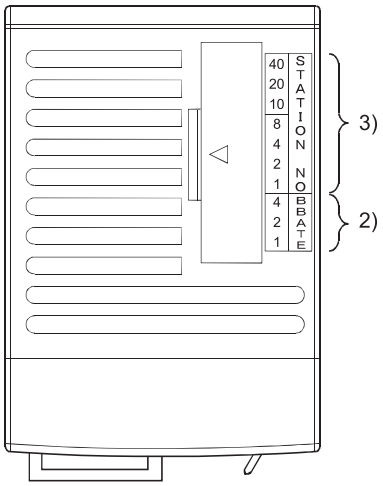

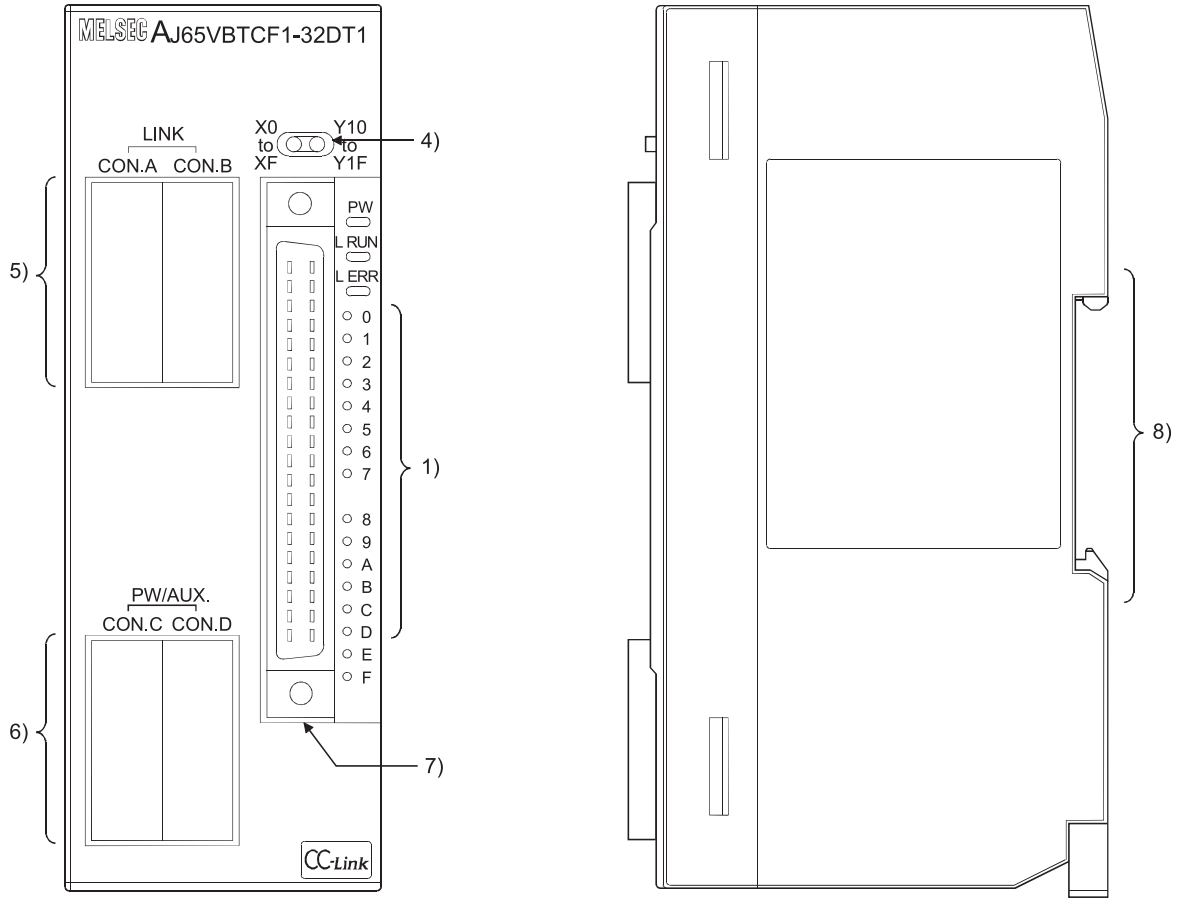

AbN
automation

<table>
<tr><th>No.</th><th>Item</th><th colspan="2">Description</th></tr>
<tr><td rowspan="4">1)</td><td rowspan="4">Operating status indicator LED</td><td>LED name</td><td>Details</td></tr>
<tr><td>PW</td><td>On: Power being supplied
Off: No power supplied</td></tr>
<tr><td>L RUN</td><td>On: Normal communication
Off: No communication (timeout error)</td></tr>
<tr><td>L ERR.</td><td>On: Communication error
Flashing regularly:
The station number or transmission speed switch setting is changed while power is on.
Flashing irregularly:
The terminating resistor setting is incorrect.
The module or CC-Link dedicated cable is affected by noise.
Off: Normal communication</td></tr>
<tr><td>0 to F</td><td>On: Input/output ON
Off: Input/output OFF</td></tr>
<tr><td>2)</td><td>Transmission speed setting switch</td><td colspan="2">
<table>
<tr><th rowspan="2">Setting</th><th colspan="3">Switch status</th><th rowspan="2">Transmission speed</th></tr>
<tr><th>4</th><th>2</th><th>1</th></tr>
<tr><td>0</td><td>OFF</td><td>OFF</td><td>OFF</td><td>156kbps</td></tr>
<tr><td>1</td><td>OFF</td><td>OFF</td><td>ON</td><td>625kbps</td></tr>
<tr><td>2</td><td>OFF</td><td>ON</td><td>OFF</td><td>2.5 Mbps</td></tr>
<tr><td>3</td><td>OFF</td><td>ON</td><td>ON</td><td>5.0 Mbps</td></tr>
<tr><td>4</td><td>ON</td><td>OFF</td><td>OFF</td><td>10 Mbps</td></tr>
</table>
Set the transmission speed within the above range.
</td></tr>
<tr><td>3)</td><td>Station number setting switch</td><td colspan="2">
Select "10", "20", or "40" for the tens place.
Select "1", "2", "4", or "8" for the ones place.
Set the station number within the range of 1 to 64.*1
<table>
<tr><th rowspan="2">Station number</th><th colspan="3">Tens place</th><th colspan="4">Ones place</th></tr>
<tr><th>40</th><th>20</th><th>10</th><th>8</th><th>4</th><th>2</th><th>1</th></tr>
<tr><td>1</td><td>OFF</td><td>OFF</td><td>OFF</td><td>OFF</td><td>OFF</td><td>OFF</td><td>ON</td></tr>
<tr><td>2</td><td>OFF</td><td>OFF</td><td>OFF</td><td>OFF</td><td>OFF</td><td>ON</td><td>OFF</td></tr>
<tr><td>3</td><td>OFF</td><td>OFF</td><td>OFF</td><td>OFF</td><td>OFF</td><td>ON</td><td></td></tr>
<tr><td>4</td><td>OFF</td><td>OFF</td><td>OFF</td><td>OFF</td><td>OFF</td><td>OFF</td><td>OFF</td></tr>
<tr><td>:</td><td>:</td><td>:</td><td>:</td><td>:</td><td>:</td><td>:</td><td>:</td></tr>
<tr><td>10</td><td>OFF</td><td>OFF</td><td>ON</td><td>OFF</td><td>OFF</td><td>OFF</td><td>OFF</td></tr>
<tr><td>11</td><td>OFF</td><td>OFF</td><td>ON</td><td>OFF</td><td>OFF</td><td>OFF</td><td>ON</td></tr>
<tr><td>:</td><td>:</td><td>:</td><td>:</td><td>:</td><td>:</td><td>:</td><td>:</td></tr>
<tr><td>64</td><td>ON</td><td>ON</td><td>OFF</td><td>OFF</td><td>ON</td><td>OFF</td><td>OFF</td></tr>
</table>
(Example) Setting the station number to 32:
<table>
<tr><th rowspan="2">Station number</th><th colspan="3">Tens place</th><th colspan="4">Ones place</th></tr>
<tr><th>40</th><th>20</th><th>10</th><th>8</th><th>4</th><th>2</th><th>1</th></tr>
<tr><td>32</td><td>OFF</td><td>ON</td><td>ON</td><td>OFF</td><td>OFF</td><td>ON</td><td>OFF</td></tr>
</table>
</td></tr>
</table>

*1 A unique station number should be set.

2 - 16

No.	Item	Description
4)	Indication selector switch*2	When the switch is set to "X0-XF", LEDs indicate the ON/OFF status of X0 to XF. When the switch is set to "Y10-Y1F", LEDs indicate the ON/OFF status of Y10 to Y1F.
5)	Connector for communication	One-touch connector for communication line. When carrying out wiring, connect two optional one-touch connector plugs for communication (A6CON-L5P) at top and bottom. When changing the module online, connect the optional online connectors (A6CON-LJ5P) between the connector and plugs. When the module is used at either end of the CC-Link system, attach an optional one-touch connector plug with terminating resistor (110Ω) (A6CON-TR11(N)).
6)	Connector for power supply and FG	One-touch connector for module power supply line, I/O power supply line, and FG. When carrying out jumper wiring, connect two optional one-touch connector plugs for power supply and FG at top and bottom. Two different types (A6CON-PW5P, A6CON-PW5P-SOD) are available as the one-touch connector plugs for power supply and FG. When not carrying out jumper wiring, also connect the plugs (for safety and dust prevention). When changing the module online, connect the optional online connectors (A6CON-PWJ5P) between the connector and plugs.
7)	Connector	Connector for I/O signals.
8)	DIN rail hook	Hook to install the module to the DIN rail or connector type Metal installation fitting (option). When mounting the module to a DIN rail, push in the DIN rail hook until it clicks.

*2 To operate the indication selector switch, do not use a tool such as a screwdriver. Doing so may damage the switch.

AbN
automation

AJ65FBTA□-16□ (Low profile waterproof connector 16 points module)

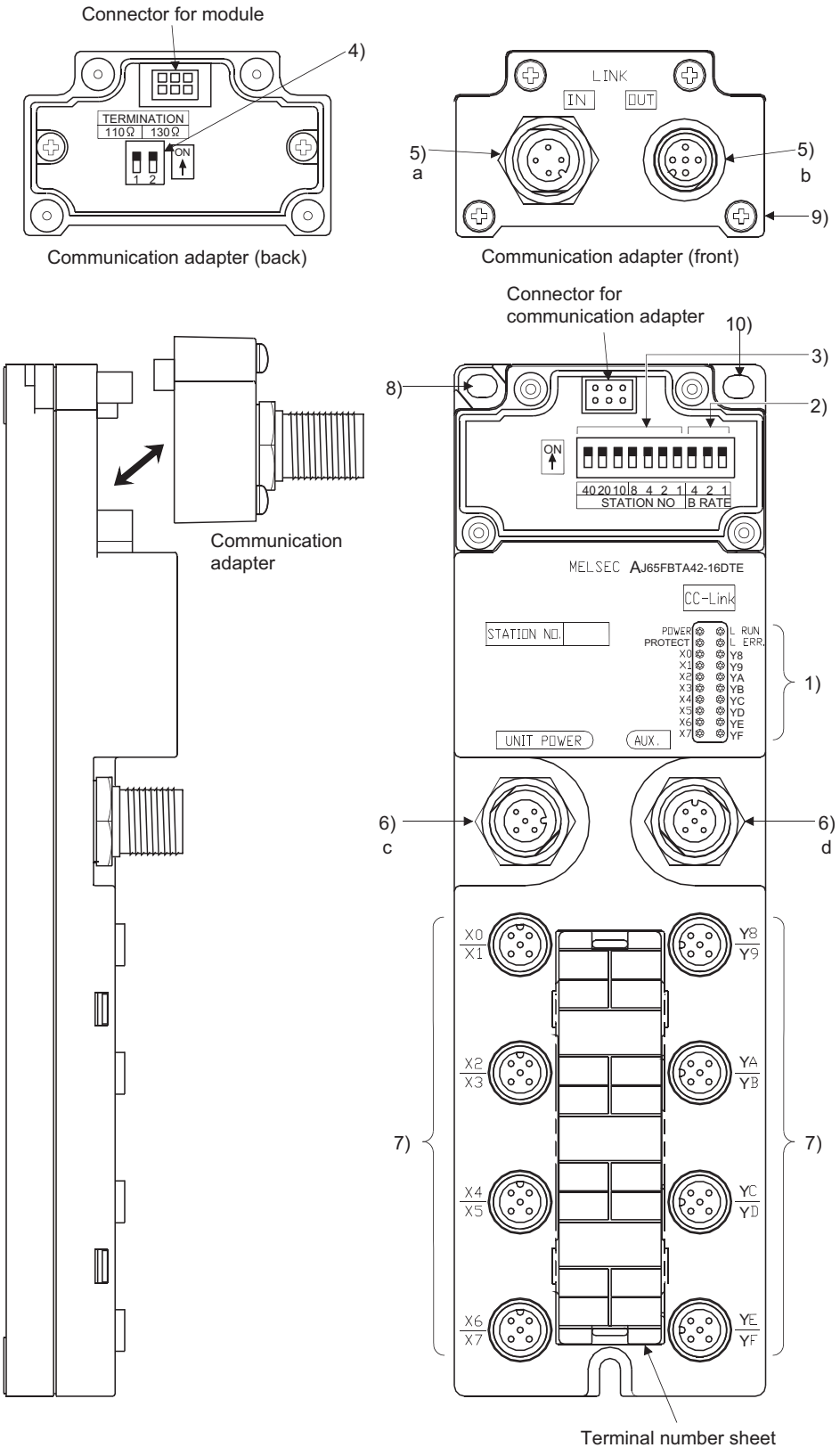

2 - 18

<table>
<tr><th>No.</th><th>Item</th><th colspan="2">Description</th></tr>
<tr><td rowspan="5">1)</td><td rowspan="5">Operating status indicator LED</td><td>LED name</td><td>Details</td></tr>
<tr><td>POWER</td><td>On: Power being supplied
Off: No power supplied</td></tr>
<tr><td>PROTECT</td><td>On: Any protection of the output part was activated.
(The blown fuse was detected in the master module.)
Off: Normal operation</td></tr>
<tr><td>L RUN</td><td>On: Normal communication
Off: No communication (timeout error)</td></tr>
<tr><td>L ERR.</td><td>On: Communication error
Flashing regularly:
The station number or transmission speed switch setting is changed while power is on.
Flashing irregularly:
The terminating resistor setting is incorrect.
The module or CC-Link dedicated cable is affected by noise.
Off: Normal communication</td></tr>
<tr><td></td><td></td><td>X0 to X7/
Y0 to YF/
X0 to X7,
Y8 to YF</td><td>On: Input/output ON
Off: Input/output OFF</td></tr>
<tr><td>2)</td><td>Transmission speed setting switch</td><td colspan="2">
<table>
<tr><th rowspan="2">Setting</th><th colspan="3">Switch status</th><th rowspan="2">Transmission speed</th></tr>
<tr><th>4</th><th>2</th><th>1</th></tr>
<tr><td>0</td><td>OFF</td><td>OFF</td><td>OFF</td><td>156kbps</td></tr>
<tr><td>1</td><td>OFF</td><td>OFF</td><td>ON</td><td>625kbps</td></tr>
<tr><td>2</td><td>OFF</td><td>ON</td><td>OFF</td><td>2.5 Mbps</td></tr>
<tr><td>3</td><td>OFF</td><td>ON</td><td>ON</td><td>5.0 Mbps</td></tr>
<tr><td>4</td><td>ON</td><td>OFF</td><td>OFF</td><td>10 Mbps</td></tr>
</table>
Set the transmission speed within the above range.
Remove the communication adapter to set the transmission speed. (Default: all OFF)</td></tr>
<tr><td>3)</td><td>Station number setting switch</td><td colspan="2">Select "10", "20", or "40" for the tens place.
Select "1", "2", "4", or "8" for the ones place.
Set the station number within the range of 1 to 64.*1
(Example) Setting the station number to 32:
<table>
<tr><th rowspan="2">Station number</th><th>Tens place</th><th colspan="7">Ones place</th></tr>
<tr><th>40</th><th>20</th><th>10</th><th>8</th><th>4</th><th>2</th><th>1</th></tr>
<tr><td>10</td><td>ON</td><td>OFF</td><td>ON</td><td>OFF</td><td>OFF</td><td>OFF</td><td>OFF</td></tr>
</table>
Remove the communication adapter to set the station number. (Default: all OFF)</td></tr>
<tr><td>4)</td><td>Terminal resistor setting switch</td><td colspan="2">Used to set the terminating resistor.
<table>
<tr><th colspan="2">DIP switch</th><th rowspan="2">Contents</th></tr>
<tr><th>1</th><th>2</th></tr>
<tr><td>OFF</td><td>OFF</td><td>No terminating resistor</td></tr>
<tr><td>ON</td><td>OFF</td><td>110Ω terminating resistor</td></tr>
<tr><td>OFF</td><td>ON</td><td>130Ω terminating resistor</td></tr>
<tr><td>ON</td><td>ON</td><td>Setting prohibited</td></tr>
</table>
(Default: all OFF)</td></tr>
</table>

*1 A unique station number should be set.

AbN
automation

<table>
<tr><th>No.</th><th>Item</th><th>Description</th></tr>
<tr><td>5)</td><td>Waterproof connector for transmission line*2</td><td>
<table>
<tr><th></th><th>Printing</th><th>Description</th></tr>
<tr><td>a</td><td>LINK IN</td><td>Connector (male, 4 pins) for the IN-side (master station side) transmission line</td></tr>
<tr><td>b</td><td>LINK OUT</td><td>Connector (female, 5 pins) for the OUT-side transmission line.
Attach a waterproof cap (accessory) to the unused connector.
(Tightening torque range:0.29 to 0.34N•m)</td></tr>
</table>
</td></tr>
<tr><td>6)</td><td>Waterproof connector for power line*2</td><td>
<table>
<tr><th></th><th>Printing</th><th>Description</th></tr>
<tr><td>c</td><td>UNIT POWER</td><td>Connector (male, 5 pins) for supplying power to the module</td></tr>
<tr><td>d</td><td>AUX.</td><td>Connector (male, 5 pins) for supplying power to loads</td></tr>
</table>
</td></tr>
<tr><td>7)</td><td>Waterproof connector for I/O*2</td><td>Waterproof connectors for I/O signals.
Attach an optional waterproof cap (A6CAP-WP2) to the unused waterproof connector.
(Tightening torque range: 0.29 to 0.34N•m)</td></tr>
<tr><td>8)</td><td>FG terminal</td><td>FG terminal for module</td></tr>
<tr><td>9)</td><td>Communication adapter mounting screw</td><td>Used to mount or remove a communication adapter while the module is online.
(Tightening torque range: 0.42 to 0.58N•m)</td></tr>
<tr><td>10)</td><td>Module mounting hole</td><td>Screw holes for mounting the module (2-4.5 × 6, M4 screw)
(Tightening torque range: 0.78 to 1.18N•m)</td></tr>
</table>

*2 Waterproof connector (compliant with IEC 60947-5-2, M12)

2 - 20

AJ65VBTS□-16□ (Spring clamp terminal block type 16 points module)

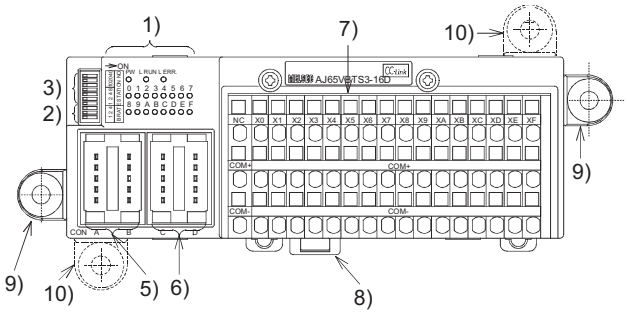

AJ65VBTS□-32□ (Spring clamp terminal block type 32 points module)

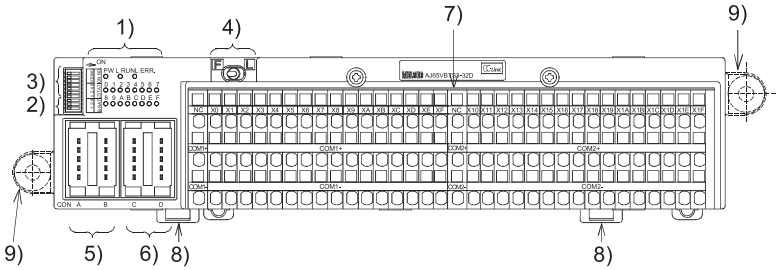

AbN
automation

<table>
<tr><th>No.</th><th>Item</th><th colspan="2">Description</th></tr>
<tr><td rowspan="4">1)</td><td rowspan="4">Operating status indicator LED</td><td>LED name</td><td>Details</td></tr>
<tr><td>PW</td><td>On: Power being supplied
Off: No power supplied</td></tr>
<tr><td>L RUN</td><td>On: Normal communication
Off: No communication (timeout error)</td></tr>
<tr><td>L ERR.</td><td>On: Communication error
Flashing regularly:
The station number or transmission speed switch setting is changed while power is on.
Flashing irregularly:
The terminating resistor setting is incorrect.
The module or CC-Link dedicated cable is affected by noise.
Off: Normal communication</td></tr>
<tr><td>0 to F</td><td>On: Input/output ON
Off: Input/output OFF</td></tr>
<tr><td>2)</td><td>Transmission speed setting switch</td><td colspan="2">
<table>
<tr><th rowspan="2">Setting</th><th colspan="3">Switch status</th><th rowspan="2">Transmission speed</th></tr>
<tr><th>4</th><th>2</th><th>1</th></tr>
<tr><td>0</td><td>OFF</td><td>OFF</td><td>OFF</td><td>156kbps</td></tr>
<tr><td>1</td><td>OFF</td><td>OFF</td><td>ON</td><td>625kbps</td></tr>
<tr><td>2</td><td>OFF</td><td>ON</td><td>OFF</td><td>2.5 Mbps</td></tr>
<tr><td>3</td><td>OFF</td><td>ON</td><td>ON</td><td>5.0 Mbps</td></tr>
<tr><td>4</td><td>ON</td><td>OFF</td><td>OFF</td><td>10 Mbps</td></tr>
</table>
Set the transmission speed within the above range.
</td></tr>
<tr><td>3)</td><td>Station number setting switch</td><td colspan="2">
Select "10", "20", or "40" for the tens place.
Select "1", "2", "4", or "8" for the ones place.
Set the station number within the range of 1 to 64.*1
<table>
<tr><th rowspan="2">Station number</th><th colspan="3">Tens place</th><th colspan="4">Ones place</th></tr>
<tr><th>40</th><th>20</th><th>10</th><th>8</th><th>4</th><th>2</th><th>1</th></tr>
<tr><td>1</td><td>OFF</td><td>OFF</td><td>OFF</td><td>OFF</td><td>OFF</td><td>OFF</td><td>ON</td></tr>
<tr><td>2</td><td>OFF</td><td>OFF</td><td>OFF</td><td>OFF</td><td>OFF</td><td>ON</td><td>OFF</td></tr>
<tr><td>3</td><td>OFF</td><td>OFF</td><td>OFF</td><td>OFF</td><td>OFF</td><td>ON</td><td></td></tr>
<tr><td>4</td><td>OFF</td><td>OFF</td><td>OFF</td><td>OFF</td><td>OFF</td><td>OFF</td><td>OFF</td></tr>
<tr><td>:</td><td>:</td><td>:</td><td>:</td><td>:</td><td>:</td><td>:</td><td>:</td></tr>
<tr><td>10</td><td>OFF</td><td>OFF</td><td>ON</td><td>OFF</td><td>OFF</td><td>OFF</td><td>OFF</td></tr>
<tr><td>11</td><td>OFF</td><td>OFF</td><td>ON</td><td>OFF</td><td>OFF</td><td>OFF</td><td>ON</td></tr>
<tr><td>:</td><td>:</td><td>:</td><td>:</td><td>:</td><td>:</td><td>:</td><td>:</td></tr>
<tr><td>64</td><td>ON</td><td>ON</td><td>OFF</td><td>OFF</td><td>ON</td><td>OFF</td><td>OFF</td></tr>
</table>
(Example) Setting the station number to 32:
<table>
<tr><th rowspan="2">Station number</th><th colspan="3">Tens place</th><th colspan="4">Ones place</th></tr>
<tr><th>40</th><th>20</th><th>10</th><th>8</th><th>4</th><th>2</th><th>1</th></tr>
<tr><td>32</td><td>OFF</td><td>ON</td><td>ON</td><td>OFF</td><td>OFF</td><td>ON</td><td>OFF</td></tr>
</table>
</td></tr>
</table>

*1 A unique station number should be set.

2 - 22

No.	Item	Description
4)	Indication selector switch*2	When the switch is set to "F", LEDs indicate the ON/OFF status of the first 16 points. When the switch is set to "L", LEDs indicate the ON/OFF status of the latter 16 points.
5)	Connector for communication	One-touch connector for communication line. When carrying out wiring, connect two optional one-touch connector plugs for communication (A6CON-L5P) at top and bottom. When changing the module online, connect the optional online connectors (A6CON-LJ5P) between the connector and plugs. When the module is used at either end of the CC-Link system, attach an optional one-touch connector plug with terminating resistor (110Ω) (A6CON-TR11(N)).
6)	Connector for power supply and FG	One-touch connector for module power supply line, and FG. When carrying out jumper wiring, connect two optional one-touch connector plugs for power supply and FG at top and bottom. Two different types (A6CON-PW5P, A6CON-PW5P-SOD) are available as the one-touch connector plugs for power supply and FG. When not carrying out jumper wiring, also connect the plugs (for safety and dust prevention). When changing the module online, connect the optional online connectors (A6CON-PWJ5P) between the connector and plugs.
7)	2-piece spring clamp terminal block	2-piece terminal block for I/O signals.
8)	DIN rail hook	Hook to install the module to the DIN rail or connector type Metal installation fitting (option). When mounting the module to a DIN rail, push in the DIN rail hook until it clicks.
9) 10)	Mounting bracket (accessory)	Used to install the module to a control panel.

*2 To operate the indication selector switch, do not use a tool such as a screwdriver. Doing so may damage the switch.

AbN
automation

AJ65VBTCE□-8□ (Sensor connector (e-CON) type 8 points module)

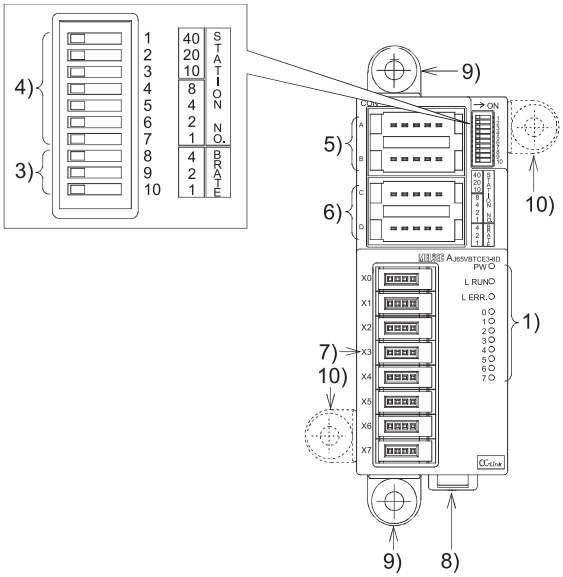

AJ65VBTCE□-16□ (Sensor connector (e-CON) type 16 points module)

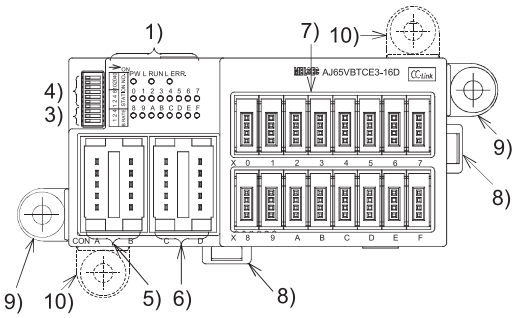

AJ65VBTCE□-32□ (Sensor connector (e-CON) type 32 points module)

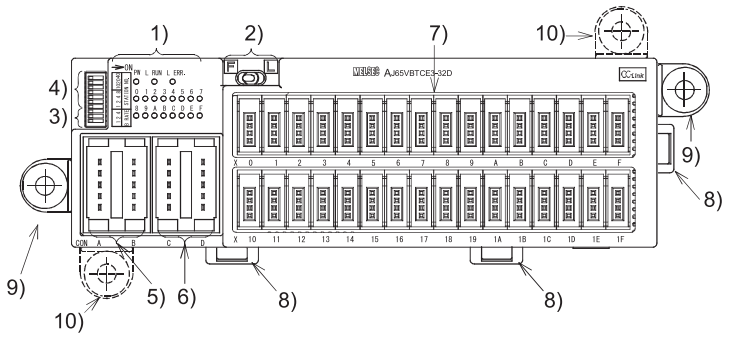

2 - 24

<table>
<tr><th>No.</th><th>Item</th><th colspan="2">Description</th></tr>
<tr><td rowspan="5">1)</td><td rowspan="5">Operating status indicator LED</td><td>LED name</td><td>Details</td></tr>
<tr><td>PW</td><td>On: Power being supplied
Off: No power supplied</td></tr>
<tr><td>L RUN</td><td>On: Normal communication
Off: No communication (timeout error)</td></tr>
<tr><td>L ERR.</td><td>On: Communication error
Flashing regularly:
The station number or transmission speed switch setting is changed while power is on.
Flashing irregularly:
The terminating resistor setting is incorrect.
The module or CC-Link dedicated cable is affected by noise.
Off: Normal communication</td></tr>
<tr><td>0 to F</td><td>On: Input/output ON
Off: Input/output OFF</td></tr>
<tr><td>2)</td><td>Indication selector switch*1</td><td colspan="2">When the switch is set to "F", LEDs indicate the ON/OFF status of the first 16 points.
When the switch is set to "L", LEDs indicate the ON/OFF status of the latter 16 points.</td></tr>
<tr><td>3)</td><td>Transmission speed setting switch</td><td colspan="2">
<table>
<tr><th rowspan="2">Setting</th><th colspan="3">Switch status</th><th rowspan="2">Transmission speed</th></tr>
<tr><th>4</th><th>2</th><th>1</th></tr>
<tr><td>0</td><td>OFF</td><td>OFF</td><td>OFF</td><td>156kbps</td></tr>
<tr><td>1</td><td>OFF</td><td>OFF</td><td>ON</td><td>625kbps</td></tr>
<tr><td>2</td><td>OFF</td><td>ON</td><td>OFF</td><td>2.5 Mbps</td></tr>
<tr><td>3</td><td>OFF</td><td>ON</td><td>ON</td><td>5.0 Mbps</td></tr>
<tr><td>4</td><td>ON</td><td>OFF</td><td>OFF</td><td>10 Mbps</td></tr>
</table>
Set the transmission speed within the above range.</td></tr>
<tr><td>4)</td><td>Station number setting switch</td><td colspan="2">Select "10", "20", or "40" for the tens place.
Select "1", "2", "4", or "8" for the ones place.
Set the station number within the range of 1 to 64.*1
<table>
<tr><th rowspan="2">Station number</th><th colspan="3">Tens place</th><th colspan="4">Ones place</th></tr>
<tr><th>40</th><th>20</th><th>10</th><th>8</th><th>4</th><th>2</th><th>1</th></tr>
<tr><td>1</td><td>OFF</td><td>OFF</td><td>OFF</td><td>OFF</td><td>OFF</td><td>OFF</td><td>ON</td></tr>
<tr><td>2</td><td>OFF</td><td>OFF</td><td>OFF</td><td>OFF</td><td>OFF</td><td>ON</td><td>OFF</td></tr>
<tr><td>3</td><td>OFF</td><td>OFF</td><td>OFF</td><td>OFF</td><td>OFF</td><td>ON</td><td></td></tr>
<tr><td>4</td><td>OFF</td><td>OFF</td><td>OFF</td><td>OFF</td><td>OFF</td><td>OFF</td><td>OFF</td></tr>
<tr><td>:</td><td>:</td><td>:</td><td>:</td><td>:</td><td>:</td><td>:</td><td>:</td></tr>
<tr><td>10</td><td>OFF</td><td>OFF</td><td>ON</td><td>OFF</td><td>OFF</td><td>OFF</td><td>OFF</td></tr>
<tr><td>11</td><td>OFF</td><td>OFF</td><td>ON</td><td>OFF</td><td>OFF</td><td>OFF</td><td>ON</td></tr>
<tr><td>:</td><td>:</td><td>:</td><td>:</td><td>:</td><td>:</td><td>:</td><td>:</td></tr>
<tr><td>64</td><td>ON</td><td>ON</td><td>OFF</td><td>OFF</td><td>ON</td><td>OFF</td><td>OFF</td></tr>
</table>
(Example) Setting the station number to 32:
<table>
<tr><th rowspan="2">Station number</th><th colspan="3">Tens place</th><th colspan="4">Ones place</th></tr>
<tr><th>40</th><th>20</th><th>10</th><th>8</th><th>4</th><th>2</th><th>1</th></tr>
<tr><td>32</td><td>OFF</td><td>ON</td><td>ON</td><td>OFF</td><td>OFF</td><td>ON</td><td>OFF</td></tr>
</table></td></tr>
</table>

*1 A unique station number should be set.

AbN
automation

No.	Item	Description
5)	Connector for communication	One-touch connector for communication line. When carrying out wiring, connect two optional one-touch connector plugs for communication (A6CON-L5P) at top and bottom. When changing the module online, connect the optional online connectors (A6CON-LJ5P) between the connector and plugs. When the module is used at either end of the CC-Link system, attach an optional one-touch connector plug with terminating resistor (110Ω) (A6CON-TR11(N)).
6)	Connector for power supply and FG	One-touch connector for module power supply line, I/O power supply line, and FG. When carrying out jumper wiring, connect two optional one-touch connector plugs for power supply and FG at top and bottom. Two different types (A6CON-PW5P, A6CON-PW5P-SOD) are available as the one-touch connector plugs for power supply and FG. When not carrying out jumper wiring, also connect the plugs (for safety and dust prevention). When changing the module online, connect the optional online connectors (A6CON-PWJ5P) between the connector and plugs.
7)	Connector for I/O	Connector for I/O signals.
8)	DIN rail hook	Hook to install the module to the DIN rail or connector type Metal installation fitting (option). When mounting the module to a DIN rail, push in the DIN rail hook until it clicks.
9) 10)	Mounting bracket (accessory)	Used to install the module to a control panel. (Can be attached in two different ways, 9) and 10).) Holding fixtures for screw installation are removal.

2 - 26

3 GENERAL SPECIFICATIONS

The following table lists the general specifications of the compact type remote I/O module.

Item	Specifications					
Operating ambient temperature	0 to 55°C ∗6					
Storage ambient temperature	-20 to 75°C ∗6					
Operating ambient humidity	10 to 90% RH, non-condensing (The waterproof type remote I/O module is compliant with IP67. ∗4)					
Storage ambient humidity	10 to 90% RH, non-condensing					
Vibration resistance	Compliant with IEC 61131-2 and JIS B 3502		Frequency	Constant acceleration	Half amplitude	Sweep count
		Under intermittent vibration	5 to 8.4Hz	—	3.5mm	10 times each in X, Y, Z directions
			8.4 to 150Hz	9.8m/s^2	—	
		Under continuous vibration	5 to 8.4Hz	—	1.75mm	—
			8.4 to 150Hz	4.9m/s^2	—	
Shock resistance	Compliant with IEC 61131-2 and JIS B 3502 (147 m/s^2, 3 times each in 3 directions X, Y, Z)					
Operating atmosphere	No corrosive gases					
Operating altitude ∗3	0 to 2000m					
Installation location	Inside a control panel ∗5					
Overvoltage category ∗1	II or less					
Pollution degree ∗2	2 or less					

∗1 This indicates the section of the power supply to which the equipment is assumed to be connected between the public electrical power distribution network and the machinery within premises.
Category II applies to equipment for which electrical power is supplied from fixed facilities. The surge voltage withstand level for up to the rated voltage of 300V is 2500V.

∗2 This index indicates the degree to which conductive material is generated in terms of the environment in which the equipment is used.
Pollution level 2 is when only non-conductive pollution occurs. A temporary conductivity caused by condensing must be expected occasionally.

∗3 Do not use or store the programmable controller under pressure higher than the atmospheric pressure of altitude 0m. Doing so may cause malfunction. When using the programmable controller under pressure, please consult your local Mitsubishi representative.

∗4 This applies only when all waterproof connectors are being used or when waterproof caps are attached to unused waterproof connectors or pipes. (Only the AJ65SBTW□-16□ has pipes.)

∗5 The module can be used in an environment other than inside a control panel if the conditions such as the operating ambient temperature and humidity are satisfied.

∗6 For the waterproof type remote I/O module (AJ65SBTW□-16□ only), the operating ambient temperature and storage ambient temperature will be as follows.

Item		Specifications
Operating ambient temperature		0 to 45°C
Storage ambient temperature	Not wired (individual product)	-20 to 65°C
	Wired (after cable installation)	-10 to 55°C

REMARK

To ensure that the product maintains EMC and Low Voltage Directives, certain measures may be necessary. Please refer to the user's manual for the CPU module used.

AbN
automation

MEMO

3 - 2

4 SPECIFICATIONS FOR INPUT MODULES

This chapter describes the specifications for a input module that can be connected to the CC-Link system.

4.1 Terminal Block Type Input Module

4.1.1 AJ65SBTB2N-8A 100VAC input module

Item \ Type		AC input module	
		AJ65SBTB2N-8A	Appearance
Number of input points		8 points	
Isolation method		Photocoupler	
Rated input voltage/rated frequency		100 to 120VAC (ripple ratio: within 5%), 50/60Hz	
Rated input current		Approx. 7mA (at 100VAC, 60Hz)	
Operating voltage range		85 to 132VAC (50/60Hz ±3Hz)	
Max. number of simultaneous input points		100% (at 110VAC) 60% (at 132VAC)	
Max. inrush current		200mA within 1ms (at 132VAC)	
ON voltage/ON current		80VAC or higher/3.5mA or higher	
OFF voltage/OFF current		30VAC or lower/1.7mA or lower	
Input resistance		Approx.15kΩ at 60Hz, approx.18kΩ at 50Hz	
Response time	OFF→ON	20ms or less (at 100VAC, 60Hz)	
	ON→OFF	20ms or less (at 100VAC, 60Hz)	
Wiring method for common		8 points/common (2-wire, terminal block type)	
Number of occupied stations		32-point assignment/station (8 points used)	
Module power supply	Voltage	24VDC (ripple ratio: within 5%) (allowable voltage range: 20.4 to 26.4VDC)	
	Current	35mA or lower (at 24VDC and all points ON)	
Noise immunity		Noise voltage: 1500Vp-p (AC type), 500Vp-p (DC type), noise width 1μs, noise frequency 25 to 60Hz (noise simulator condition) Fast transient/burst immunity test IEC 61000-4-4:1kV	
Withstand voltage		1780VACrms for 3 cycles between all AC external terminals and ground (2000m above sea level) 500VAC for 1 minute between all DC external terminals and ground	
Insulation resistance		10MΩ or higher between all AC external terminals and ground (500VDC insulation resistance tester) 10MΩ or higher between all DC external terminals and ground (500VDC insulation resistance tester)	
Weight		0.20kg	
External connection system	Communication part, module power supply part	7-point two-piece terminal block [Transmission circuit, module power supply, FG] M3×5.2 screw (tightening torque range: 0.59 to 0.88N•m) Applicable solderless terminal: 2 or less	
	I/O power supply part, I/O part	18-point direct-mount terminal block [I/O power supply, I/O signal] M3×5.2 screw (tightening torque range: 0.59 to 0.88N•m) Applicable solderless terminal: 2 or less	
Module mounting screw		M4 screw with plain washer finished round (tightening torque range: 0.78 to 1.08N•m) Mountable with a DIN rail in 6 orientations	
Applicable DIN rail		TH35-7.5Fe, TH35-7.5Al (compliant with IEC 60715 and JIS C 2812)	
Applicable solderless terminal		• RAV1.25-3 (compliant with JIS C 2805) [Applicable wire size: 0.3 to 1.25mm^2 (22 to 16 AWG) stranded wire] • V2-MS3, RAP2-3SL, TGV2-3N [Applicable wire size: 1.25 to 2.0mm^2 (16 to 14 AWG) stranded wire]	
Wire	Material	Copper	
	Temperature rating	75°C or more	
Accessory		User's manual	

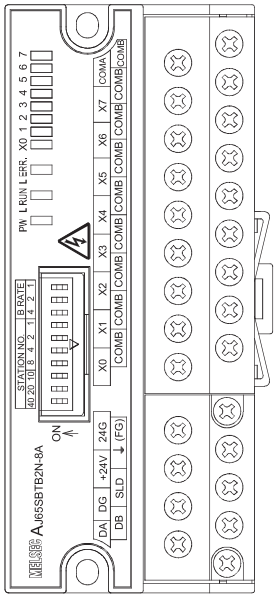

* For applicable solderless terminals connected to the terminal block, refer to the table above. Use applicable wires for the solderless terminals and fix them with an appropriate tightening torque. Use UL listed solderless terminals and, for crimping, use a tool recommended by their manufacturer.

External connection

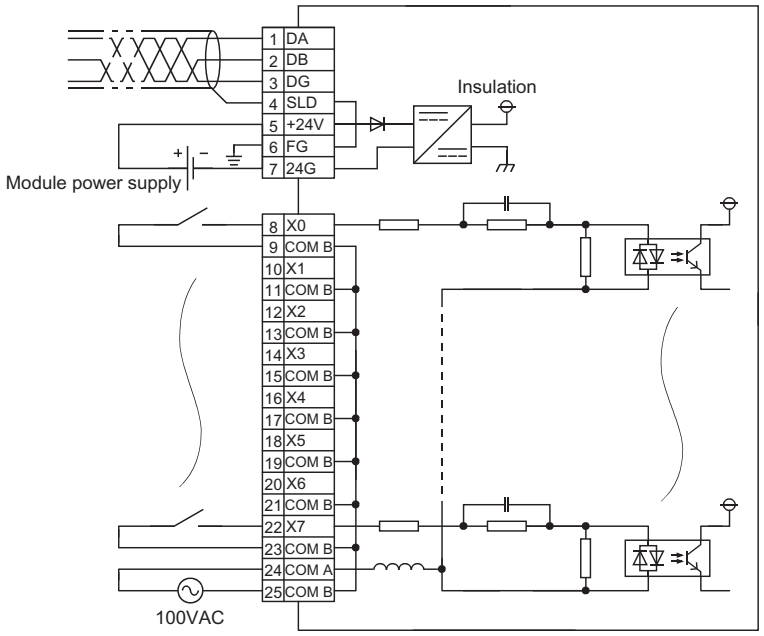

Terminal number	Signal name
TB1	DA
TB2	DB
TB3	DG
TB4	SLD
TB5	+24V
TB6	⏚ (FG)
TB7	24G
TB8	X0
TB9	COM B
TB10	X1
TB11	COM B
TB12	X2
TB13	COM B
TB14	X3
TB15	COM B
TB16	X4
TB17	COM B
TB18	X5
TB19	COM B
TB20	X6
TB21	COM B
TB22	X7
TB23	COM B
TB24	COM A
TB25	COM B

All COM B terminals are connected inside the module (shared common).

4 - 2

4.1.2 AJ65SBTB2N-16A 100VAC input module

Item \ Type			AC input module	
			AJ65SBTB2N-16A	Appearance
Number of input points			16 points	
Isolation method			Photocoupler	
Rated input voltage/rated frequency			100 to 120VAC (ripple ratio: within 5%), 50/60Hz	
Rated input current			Approx. 7mA (at 100VAC, 60Hz)	
Operating voltage range			85 to 132VAC (50/60Hz ±3Hz)	
Max. number of simultaneous input points			100% (at 110VAC), 60% (at 132VAC)	
Max. inrush current			200mA within 1ms (at 132VAC)	
ON voltage/ON current			80VAC or higher/5mA or higher	
OFF voltage/OFF current			30VAC or lower/1.7mA or lower	
Input resistance			Approx.15kΩ at 60Hz, approx.18kΩ at 50Hz	
Response time		OFF→ON	20ms or less (at 100VAC, 60Hz)	
		ON→OFF	20ms or less (at 100VAC, 60Hz)	
Wiring method for common			16 points/common (2-wire, terminal block type)	
Number of occupied stations			32-point assignment/station (16 points used)	
Module power supply		Voltage	24VDC (ripple ratio: within 5%) (allowable voltage range: 20.4 to 26.4VDC)	
		Current	40mA or lower (at 24VDC and all points ON)	
Noise immunity			Noise voltage: 1500Vp-p (AC type), 500Vp-p (DC type), noise width 1μs, noise frequency 25 to 60Hz (noise simulator condition) Fast transient/burst immunity test IEC61000-4-4:1kV	
Withstand voltage			1780VACrms for 3 cycles between all AC external terminals and ground (2000m above sea level) 500VAC for 1 minute between all DC external terminals and ground	
Insulation resistance			10MΩ or higher between all AC external terminals and ground (500VDC insulation resistance tester) 10MΩ or higher between all DC external terminals and ground (500VDC insulation resistance tester)	
Weight			0.25kg	
External connection system	Communication part, module power supply part		7-point two-piece terminal block [Transmission circuit, module power supply, FG] M3×5.2 screw (tightening torque range: 0.59 to 0.88N•m) Applicable solderless terminal: 2 or less	
	I/O power supply part, I/O part		34-point direct-mount terminal block [I/O power supply, I/O signal] M3×5.2 screw (tightening torque range: 0.59 to 0.88N•m) Applicable solderless terminal: 2 or less	
Module mounting screw			M4 screw with plain washer finished round (tightening torque range: 0.78 to 1.08N•m) Mountable with a DIN rail in 6 orientations	
Applicable DIN rail			TH35-7.5Fe, TH35-7.5Al (compliant with IEC 60715 and JIS C 2812)	
Applicable solderless terminal			• RAV1.25-3 (compliant with JIS C 2805) [Applicable wire size: 0.3 to 1.25mm^2 (22 to 16 AWG) stranded wire] • V2-MS3, RAP2-3SL, TGV2-3N [Applicable wire size: 1.25 to 2.0mm^2 (16 to 14 AWG) stranded wire]	
Wire	Material		Copper	
	Temperature rating		75°C or more	
Accessory			User's manual	

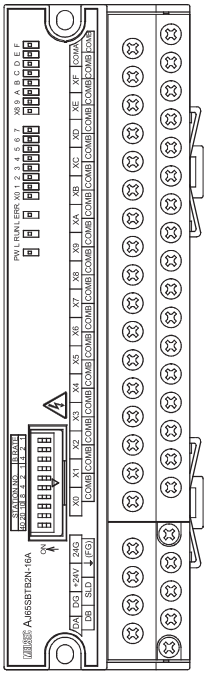

* For applicable solderless terminals connected to the terminal block, refer to the table above. Use applicable wires for the solderless terminals and fix them with an appropriate tightening torque. Use UL listed solderless terminals and, for crimping, use a tool recommended by their manufacturer.

AbN
automation

External connection

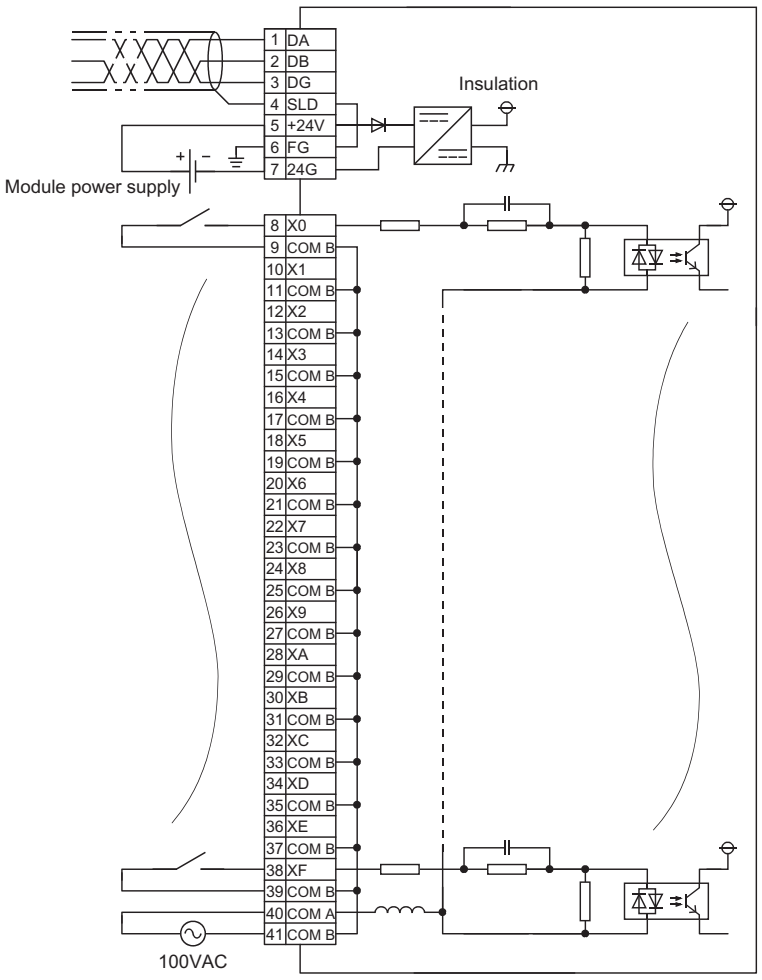

All COM B terminals are connected inside the module (shared common).

Terminal number	Signal name
TB1	DA
TB2	DB
TB3	DG
TB4	SLD
TB5	+24V
TB6	⏚ (FG)
TB7	24G
TB8	X0
TB9	COM B
TB10	X1
TB11	COM B
TB12	X2
TB13	COM B
TB14	X3
TB15	COM B
TB16	X4
TB17	COM B
TB18	X5
TB19	COM B
TB20	X6
TB21	COM B
TB22	X7
TB23	COM B
TB24	X8
TB25	COM B
TB26	X9
TB27	COM B
TB28	XA
TB29	COM B
TB30	XB
TB31	COM B
TB32	XC
TB33	COM B
TB34	XD
TB35	COM B
TB36	XE
TB37	COM B
TB38	XF
TB39	COM B
TB40	COM A
TB41	COM B

4 - 4

4.1.3 AJ65SBTB1-8D 24VDC input module (positive common (sink), negative common (source) loading)

Item \ Type		DC input module: AJ65SBTB1-8D	Appearance
Number of input points		8 points	
Isolation method		Photocoupler	
Rated input voltage		24VDC (ripple ratio: within 5%)	
Rated input current		Approx. 7mA	
Operating voltage range		19.2 to 26.4VDC	
Max. number of simultaneous input points		100%	
ON voltage/ON current		14VDC or higher/3.5mA or higher	
OFF voltage/OFF current		6VDC or lower/1.7mA or lower	
Input resistance		Approx. 3.3kΩ	
Response time	OFF→ON	1.5ms or less (at 24VDC)	
	ON→OFF	1.5ms or less (at 24VDC)	
Wiring method for common		8 points/common (2 points) (1-wire, terminal block type)	
Input type		Positive/negative common shared type (sink/source shared type)	
Number of occupied stations		32-point assignment/station (8 points used)	
Module power supply	Voltage	24VDC (ripple ratio: within 5%) (allowable voltage range: 20.4 to 26.4VDC)	
	Current	30mA or lower (at 24VDC and all points ON)	
Noise immunity		Noise voltage 500Vp-p, noise width 1μs, noise frequency 25 to 60Hz (DC type noise simulator condition)	
Withstand voltage		500VAC for 1 minute between all DC external terminals and ground	
Insulation resistance		10MΩ or higher between all DC external terminals and ground (500VDC insulation resistance tester)	
Protection degree		IP2X	
Weight		0.14kg	
External connection system	Communication part, module power supply part	7-point two-piece terminal block [Transmission circuit, module power supply, FG] M3×5.2 screw (tightening torque range: 0.59 to 0.88N•m) Applicable solderless terminal: 2 or less	
	I/O power supply part, I/O part	10-point direct-mount terminal block [I/O power supply, I/O signal] M3×5.2 screw (tightening torque range: 0.59 to 0.88N•m) Applicable solderless terminal: 2 or less	
Module mounting screw		M4 screw with plain washer finished round (tightening torque range: 0.78 to 1.08N•m) Mountable with a DIN rail in 6 orientations	
Applicable DIN rail		TH35-7.5Fe, TH35-7.5Al (compliant with IEC 60715 and JIS C 2812)	
Applicable solderless terminal		• RAV1.25-3 (compliant with JIS C 2805) [Applicable wire size: 0.3 to 1.25mm^2 (22 to 16 AWG) stranded wire] • V2-MS3, RAP2-3SL, TGV2-3N [Applicable wire size: 1.25 to 2.0mm^2 (16 to 14 AWG) stranded wire]	
Wire	Material	Copper	
	Temperature rating	75°C or more	
Accessory		User's manual	

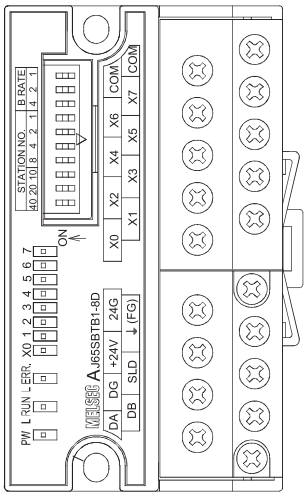

* For applicable solderless terminals connected to the terminal block, refer to the table above. Use applicable wires for the solderless terminals and fix them with an appropriate tightening torque. Use UL listed solderless terminals and, for crimping, use a tool recommended by their manufacturer.

External connection

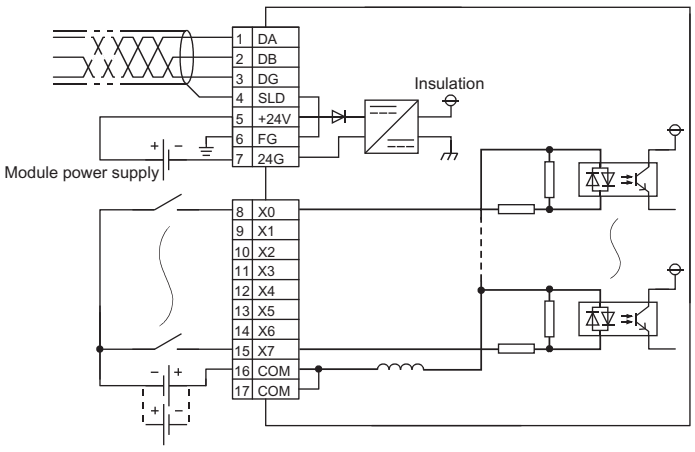

Terminal number	Signal name
TB1	DA
TB2	DB
TB3	DG
TB4	SLD
TB5	+24V
TB6	⏚ (FG)
TB7	24G
TB8	X0
TB9	X1
TB10	X2
TB11	X3
TB12	X4
TB13	X5
TB14	X6
TB15	X7
TB16	COM
TB17	COM

AbN
automation

4.1.4 AJ65SBTB3-8D 24VDC input module (positive common (sink), negative common (source) loading)

Item		Type	DC input module AJ65SBTB3-8D
Number of input points			8 points
Isolation method			Photocoupler
Rated input voltage			24VDC (ripple ratio: within 5%)
Rated input current			Approx. 7mA
Operating voltage range			19.2 to 26.4VDC
Max. number of simultaneous input points			100%
ON voltage/ON current			14VDC or higher/3.5mA or higher
OFF voltage/OFF current			6VDC or lower/1.7mA or lower
Input resistance			Approx. 3.3kΩ
Response time		OFF→ON	1.5ms or less (at 24VDC)
		ON→OFF	1.5ms or less (at 24VDC)
Wiring method for common			8 points/common (3-wire, terminal block type)
Input type			Positive/negative common shared type (sink/source shared type)
Supply current for connected device			1.0A or lower/common
Number of occupied stations			32-point assignment/station (8 points used)
Module power supply		Voltage	24VDC (ripple ratio: within 5%) (allowable voltage range: 20.4 to 26.4VDC)
		Current	40mA or lower (at 24VDC and all points ON)
Noise immunity			Noise voltage 500Vp-p, noise width 1μs, noise frequency 25 to 60Hz (DC type noise simulator condition)
Withstand voltage			500VAC for 1 minute between all DC external terminals and ground
Insulation resistance			10MΩ or higher between all DC external terminals and ground (500VDC insulation resistance tester)
Protection degree			IP2X
Weight			0.18kg
External connection system	Communication part, module power supply part		7-point two-piece terminal block [Transmission circuit, module power supply, FG] M3×5.2 screw (tightening torque range: 0.59 to 0.88N•m) Applicable solderless terminal: 2 or less
	I/O power supply part, I/O part		18-point direct-mount terminal block [I/O power supply, I/O signal] M3×5.2 screw (tightening torque range: 0.59 to 0.88N•m) Applicable solderless terminal: 2 or less
Module mounting screw			M4 screw with plain washer finished round (tightening torque range: 0.78 to 1.08N•m) Mountable with a DIN rail in 6 orientations
Applicable DIN rail			TH35-7.5Fe, TH35-7.5Al (compliant with IEC 60715 and JIS C 2812)
Applicable solderless terminal			• RAV1.25-3 (compliant with JIS C 2805) [Applicable wire size: 0.3 to 1.25mm² (22 to 16 AWG) stranded wire] • V2-MS3, RAP2-3SL, TGV2-3N [Applicable wire size: 1.25 to 2.0mm² (16 to 14 AWG) stranded wire]
Wire	Material		Copper
	Temperature rating		75°C or more
Accessory			User's manual

Appearance

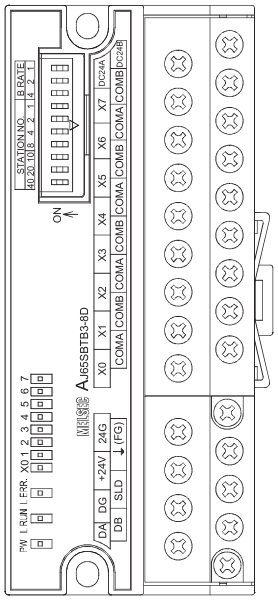

* For applicable solderless terminals connected to the terminal block, refer to the table above. Use applicable wires for the solderless terminals and fix them with an appropriate tightening torque. Use UL listed solderless terminals and, for crimping, use a tool recommended by their manufacturer.

External connection

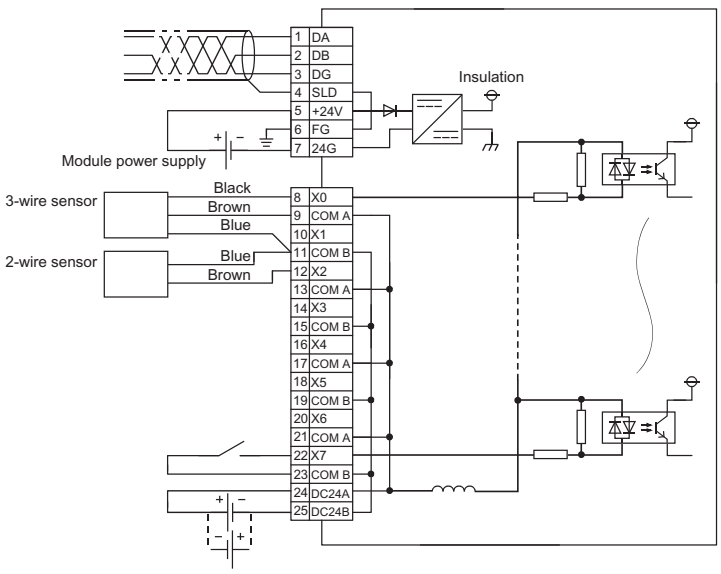

Terminal number	Signal name
TB1	DA
TB2	DB
TB3	DG
TB4	SLD
TB5	+24V
TB6	⏚ (FG)
TB7	24G
TB8	X0
TB9	COM A
TB10	X1
TB11	COM B
TB12	X2
TB13	COM A
TB14	X3
TB15	COM B
TB16	X4
TB17	COM A
TB18	X5
TB19	COM B
TB20	X6
TB21	COM A
TB22	X7
TB23	COM B
TB24	DC24A
TB25	DC24B

4 - 6

4.1.5 AJ65SBTB1-16D 24VDC input module (positive common (sink), negative common (source) loading)

Item \ Type			DC input module	
			AJ65SBTB1-16D	Appearance
Number of input points			16 points	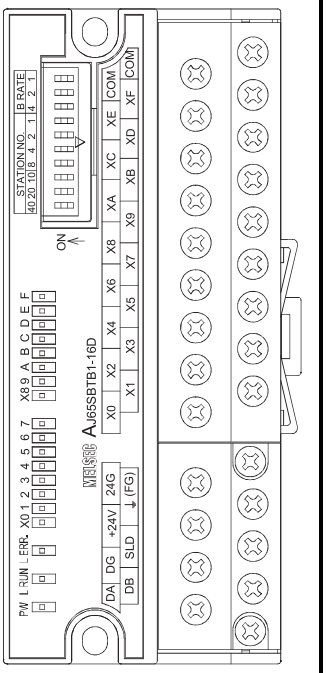
Isolation method			Photocoupler	
Rated input voltage			24VDC (ripple ratio: within 5%)	
Rated input current			Approx. 7mA	
Operating voltage range			19.2 to 26.4VDC	
Max. number of simultaneous input points			100%	
ON voltage/ON current			14VDC or higher/3.5mA or higher	
OFF voltage/OFF current			6VDC or lower/1.7mA or lower	
Input resistance			Approx. 3.3kΩ	
Response time		OFF→ON	1.5ms or less (at 24VDC)	
		ON→OFF	1.5ms or less (at 24VDC)	
Wiring method for common			16 points/common (2 points) (1-wire, terminal block type)	
Input type			Positive/negative common shared type (sink/source shared type)	
Number of occupied stations			32-point assignment/station (16 points used)	
Module power supply		Voltage	24VDC (ripple ratio: within 5%) (allowable voltage range: 20.4 to 26.4VDC)	
		Current	35mA or lower (at 24VDC and all points ON)	
Noise immunity			Noise voltage 500Vp-p, noise width 1μs, noise frequency 25 to 60Hz (DC type noise simulator condition)	
Withstand voltage			500VAC for 1 minute between all DC external terminals and ground	
Insulation resistance			10MΩ or higher between all DC external terminals and ground (500VDC insulation resistance tester)	
Protection degree			IP2X	
Weight			0.18kg	
External connection system	Communication part, module power supply part		7-point two-piece terminal block [Transmission circuit, module power supply, FG] M3×5.2 screw (tightening torque range: 0.59 to 0.88N•m) Applicable solderless terminal: 2 or less	
	I/O power supply part, I/O part		18-point direct-mount terminal block [I/O power supply, I/O signal] M3×5.2 screw(tightening torque range: 0.59 to 0.88N•m) Applicable solderless terminal: 2 or less	
Module mounting screw			M4 screw with plain washer finished round (tightening torque range: 0.78 to 1.08N•m) Mountable with a DIN rail in 6 orientations	
Applicable DIN rail			TH35-7.5Fe, TH35-7.5Al (compliant with IEC 60715 and JIS C 2812)	
Applicable solderless terminal			• RAV1.25-3 (compliant with JIS C 2805) [Applicable wire size: 0.3 to 1.25mm^2 (22 to 16 AWG) stranded wire] • V2-MS3, RAP2-3SL, TGV2-3N [Applicable wire size: 1.25 to 2.0mm^2 (16 to 14 AWG) stranded wire]	
Wire	Material		Copper	
	Temperature rating		75°C or more	
Accessory			User's manual	

* For applicable solderless terminals connected to the terminal block, refer to the table above. Use applicable wires for the solderless terminals and fix them with an appropriate tightening torque. Use UL listed solderless terminals and, for crimping, use a tool recommended by their manufacturer.

External connection

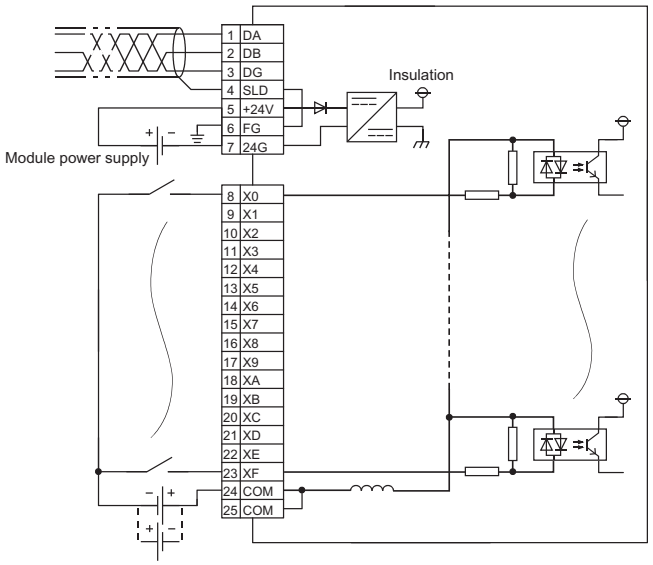

Terminal number	Signal name
TB1	DA
TB2	DB
TB3	DG
TB4	SLD
TB5	+24V
TB6	⏚ (FG)
TB7	24G
TB8	X0
TB9	X1
TB10	X2
TB11	X3
TB12	X4
TB13	X5
TB14	X6
TB15	X7
TB16	X8
TB17	X9
TB18	XA
TB19	XB
TB20	XC
TB21	XD
TB22	XE
TB23	XF
TB24	COM
TB25	COM

AbN
automation

4.1.6 AJ65SBTB1-16D1 24VDC input module (positive common (sink), negative common (source) loading)

Item \ Type		DC input module	
		AJ65SBTB1-16D1	Appearance
Number of input points		16 points	
Isolation method		Photocoupler	
Rated input voltage		24VDC (ripple ratio: within 5%)	
Rated input current		Approx. 5mA	
Operating voltage range		19.2 to 26.4VDC	
Max. number of simultaneous input points		100%	
ON voltage/ON current		15VDC or higher/3mA or higher	
OFF voltage/OFF current		3VDC or lower/0.5mA or lower	
Input resistance		Approx. 4.7kΩ	
Response time	OFF→ON	0.2ms or less (at 24VDC)	
	ON→OFF	0.2ms or less (at 24VDC)	
Wiring method for common		16 points/common (2 points) (1-wire, terminal block type)	
Input type		Positive/negative common shared type (sink/source shared type)	
Number of occupied stations		32-point assignment/station (16 points used)	
Module power supply	Voltage	24VDC (ripple ratio: within 5%) (allowable voltage range: 20.4 to 26.4VDC)	
	Current	40mA or lower (at 24VDC and all points ON)	
Noise immunity		Noise voltage 500Vp-p, noise width 1μs, noise frequency 25 to 60Hz (DC type noise simulator condition)	
Withstand voltage		500VAC for 1 minute between all DC external terminals and ground	
Insulation resistance		10MΩ or higher between all DC external terminals and ground (500VDC insulation resistance tester)	
Protection degree		IP2X	
Weight		0.18kg	
External connection system	Communication part, module power supply part	7-point two-piece terminal block [Transmission circuit, module power supply, FG] M3×5.2 screw (tightening torque range: 0.59 to 0.88N•m) Applicable solderless terminal: 2 or less	
	I/O power supply part, I/O part	18-point direct-mount terminal block [I/O power supply, I/O signal] M3×5.2 screw (tightening torque range: 0.59 to 0.88N•m) Applicable solderless terminal: 2 or less	
Module mounting screw		M4 screw with plain washer finished round (tightening torque range: 0.78 to 1.08N•m) Mountable with a DIN rail in 6 orientations	
Applicable DIN rail		TH35-7.5Fe, TH35-7.5Al (compliant with IEC 60715 and JIS C 2812)	
Applicable solderless terminal		• RAV1.25-3 (compliant with JIS C 2805) [Applicable wire size: 0.3 to 1.25mm^2 (22 to 16 AWG) stranded wire] • V2-MS3, RAP2-3SL, TGV2-3N [Applicable wire size: 1.25 to 2.0mm^2 (16 to 14 AWG) stranded wire]	
Wire	Material	Copper	
	Temperature rating	75°C or more	
Accessory		User's manual	

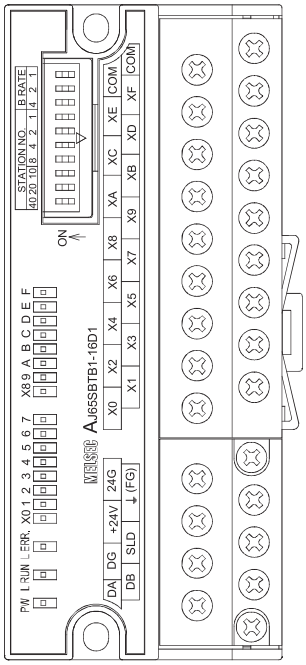

* For applicable solderless terminals connected to the terminal block, refer to the table above. Use applicable wires for the solderless terminals and fix them with an appropriate tightening torque. Use UL listed solderless terminals and, for crimping, use a tool recommended by their manufacturer.

External connection

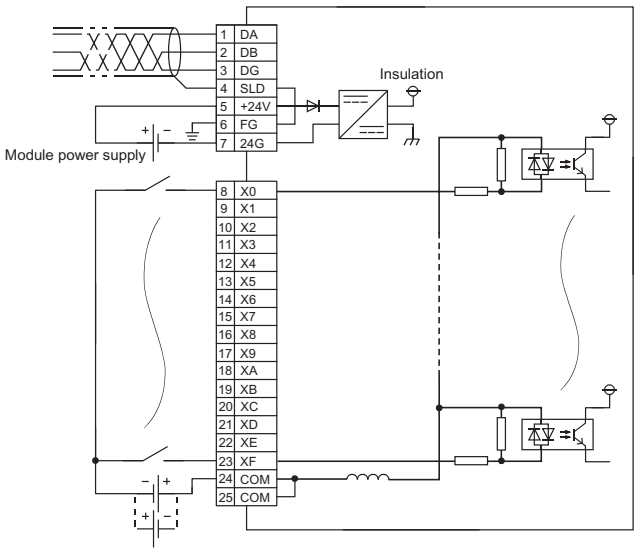

Terminal number	Signal name
TB1	DA
TB2	DB
TB3	DG
TB4	SLD
TB5	+24V
TB6	⏚ (FG)
TB7	24G
TB8	X0
TB9	X1
TB10	X2
TB11	X3
TB12	X4
TB13	X5
TB14	X6
TB15	X7
TB16	X8
TB17	X9
TB18	XA
TB19	XB
TB20	XC
TB21	XD
TB22	XE
TB23	XF
TB24	COM
TB25	COM

4.1.7 AJ65SBTB3-16D 24VDC input module (positive common (sink), negative common (source) loading)

Item \ Type			DC input module	
			AJ65SBTB3-16D	Appearance
Number of input points			16 points	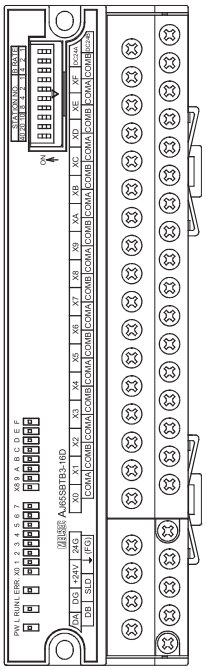
Isolation method			Photocoupler	
Rated input voltage			24VDC (ripple ratio: within 5%)	
Rated input current			Approx. 7mA	
Operating voltage range			19.2 to 26.4VDC	
Max. number of simultaneous input points			100%	
ON voltage/ON current			14VDC or higher/3.5mA or higher	
OFF voltage/OFF current			6VDC or lower/1.7mA or lower	
Input resistance			Approx. 3.3kΩ	
Response time		OFF→ON	1.5ms or less (at 24VDC)	
		ON→OFF	1.5ms or less (at 24VDC)	
Wiring method for common			16points/common (3-wire, terminal block type)	
Input type			Positive/negative common shared type (sink/source shared type)	
Supply current for connected device			1.0A or lower/common	
Number of occupied stations			32-point assignment/station (16points used)	
Module power supply		Voltage	24VDC (ripple ratio: within 5%) (allowable voltage range: 20.4 to 26.4VDC)	
		Current	45mA or lower (at 24VDC and all points ON)	
Noise immunity			Noise voltage 500Vp-p, noise width 1μs, noise frequency 25 to 60Hz (DC type noise simulator condition)	
Withstand voltage			500VAC for 1 minute between all DC external terminals and ground	
Insulation resistance			10MΩ or higher between all DC external terminals and ground (500VDC insulation resistance tester)	
Protection degree			IP2X	
Weight			0.25kg	
External connection system	Communication part, module power supply part		7-point two-piece terminal block [Transmission circuit, module power supply, FG] M3×5.2 screw (tightening torque range: 0.59 to 0.88N•m) Applicable solderless terminal: 2 or less	
	I/O power supply part, I/O part		34-point direct-mount terminal block [I/O power supply, I/O signal] M3×5.2 screw (tightening torque range: 0.59 to 0.88N•m) Applicable solderless terminal: 2 or less	
Module mounting screw			M4 screw with plain washer finished round (tightening torque range: 0.78 to 1.08N•m) Mountable with a DIN rail in 6 orientations	
Applicable DIN rail			TH35-7.5Fe, TH35-7.5Al (compliant with IEC 60715 and JIS C 2812)	
Applicable solderless terminal			• RAV1.25-3 (compliant with JIS C 2805) [Applicable wire size: 0.3 to 1.25mm^2 (22 to 16 AWG) stranded wire] • V2-MS3, RAP2-3SL, TGV2-3N [Applicable wire size: 1.25 to 2.0mm^2 (16 to 14 AWG) stranded wire]	
Wire	Material		Copper	
	Temperature rating		75°C or more	
Accessory			User's manual	

* For applicable solderless terminals connected to the terminal block, refer to the table above. Use applicable wires for the solderless terminals and fix them with an appropriate tightening torque. Use UL listed solderless terminals and, for crimping, use a tool recommended by their manufacturer.

AbN
automation

External connection

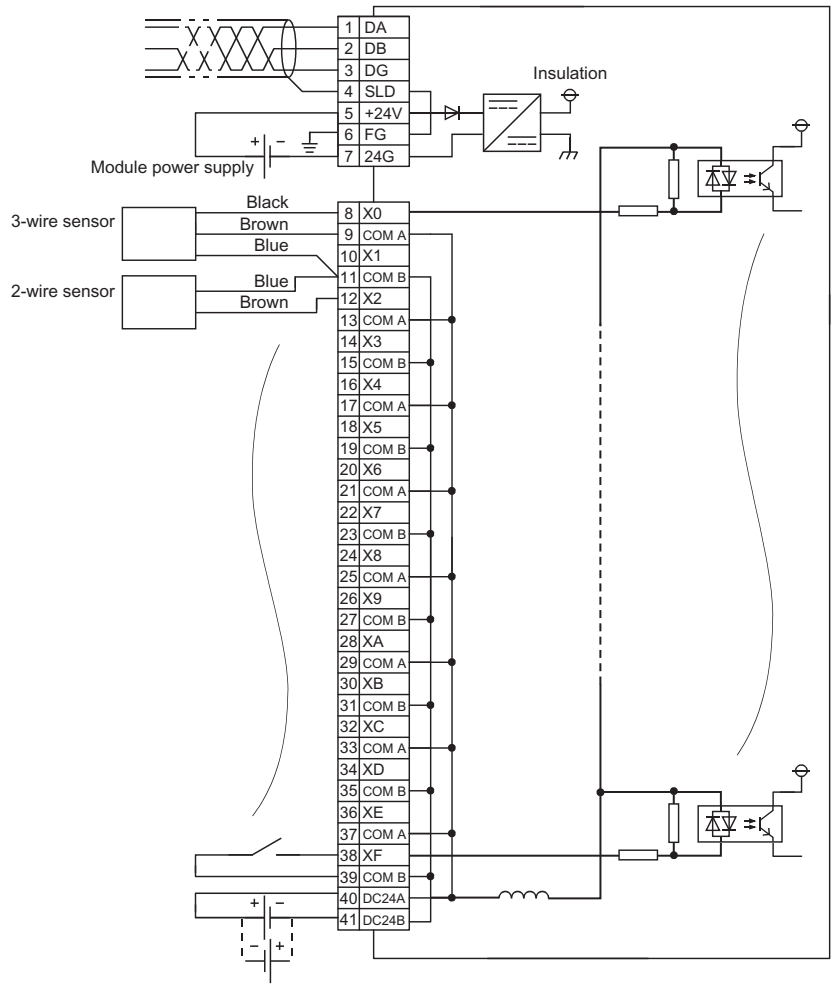

Terminal number	Signal name
TB1	DA
TB2	DB
TB3	DG
TB4	SLD
TB5	+24V
TB6	⏚ (FG)
TB7	24G
TB8	X0
TB9	COM A
TB10	X1
TB11	COM B
TB12	X2
TB13	COM A
TB14	X3
TB15	COM B
TB16	X4
TB17	COM A
TB18	X5
TB19	COM B
TB20	X6
TB21	COM A
TB22	X7
TB23	COM B
TB24	X8
TB25	COM A
TB26	X9
TB27	COM B
TB28	XA
TB29	COM A
TB30	XB
TB31	COM B
TB32	XC
TB33	COM A
TB34	XD
TB35	COM B
TB36	XE
TB37	COM A
TB38	XF
TB39	COM B
TB40	DC24A
TB41	DC24B

4 - 10

4.1.8 AJ65SBTB3-16KD 24VDC input module (positive common (sink), negative common (source) loading)

Item \ Type		DC input module				
		AJ65SBTB3-16KD				Appearance
Number of input points		16 points				
Isolation method		Photocoupler				
Rated input voltage		24VDC (ripple ratio: within 5%)				
Rated input current		Approx. 7mA				
Operating voltage range		20.4 to 28.8VDC				
Max. number of simultaneous input points		100%				
ON voltage/ON current		14VDC or higher/4mA or higher				
OFF voltage/OFF current		5.5VDC or lower/1.7mA or lower				
Input resistance		Approx. 3.0kΩ				
Response time	Input response speed	0.2ms	1.5ms	5ms	10ms	
	OFF→ON	0.2ms or less	1.5ms or less	5ms or less	10ms or less	
	ON→OFF	0.2ms or less	1.5ms or less	5ms or less	10ms or less	
Wiring method for common		16 points/common (3-wire, terminal block type)				
Input type		Positive/negative common shared type (sink/source shared type)				
Supply current for connected device		1.0A or lower/common				
Number of occupied stations		32-point assignment/station (16 points used)				
Module power supply	Voltage	24VDC (ripple ratio: within 5%) (allowable voltage range: 20.4 to 26.4VDC)				
	Current	50mA or lower (at 24VDC and all points ON)				
Noise immunity		Noise voltage 500Vp-p, noise width 1μs, noise frequency 25 to 60Hz (DC type noise simulator condition)				
Withstand voltage		500VAC for 1 minute between all DC external terminals and ground				
Insulation resistance		10MΩ or higher between all DC external terminals and ground (500VDC insulation resistance tester)				
Protection degree		IP2X				
Weight		0.26kg				
External connection system	Communication part, module power supply part	7-point two-piece terminal block [Transmission circuit, module power supply, FG] M3×5.2 screw (tightening torque range: 0.59 to 0.88N•m) Applicable solderless terminal: 2 or less				
	I/O power supply part, I/O part	34-point direct-mount terminal block [I/O power supply, I/O signal] M3×5.2 screw (tightening torque range: 0.59 to 0.88N•m) Applicable solderless terminal: 2 or less				
Module mounting screw		M4 screw with plain washer finished round (tightening torque range: 0.78 to 1.08N•m) Mountable with a DIN rail in 6 orientations				
Applicable DIN rail		TH35-7.5Fe, TH35-7.5Al (compliant with IEC 60715 and JIS C 2812)				
Applicable solderless terminal		• RAV1.25-3 (compliant with JIS C 2805) [Applicable wire size: 0.3 to 1.25mm^2 (22 to 16 AWG) stranded wire] • V2-MS3, RAP2-3SL, TGV2-3N [Applicable wire size: 1.25 to 2.0mm^2 (16 to 14 AWG) stranded wire]				
Wire	Material	Copper				
	Temperature rating	75°C or more				
Accessory		User's manual				

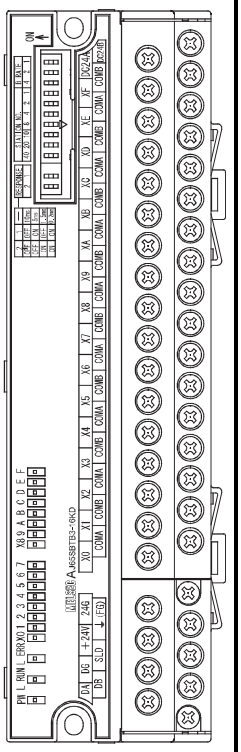

* For applicable solderless terminals connected to the terminal block, refer to the table above. Use applicable wires for the solderless terminals and fix them with an appropriate tightening torque. Use UL listed solderless terminals and, for crimping, use a tool recommended by their manufacturer.

4 - 11

AbN
automation

External connection

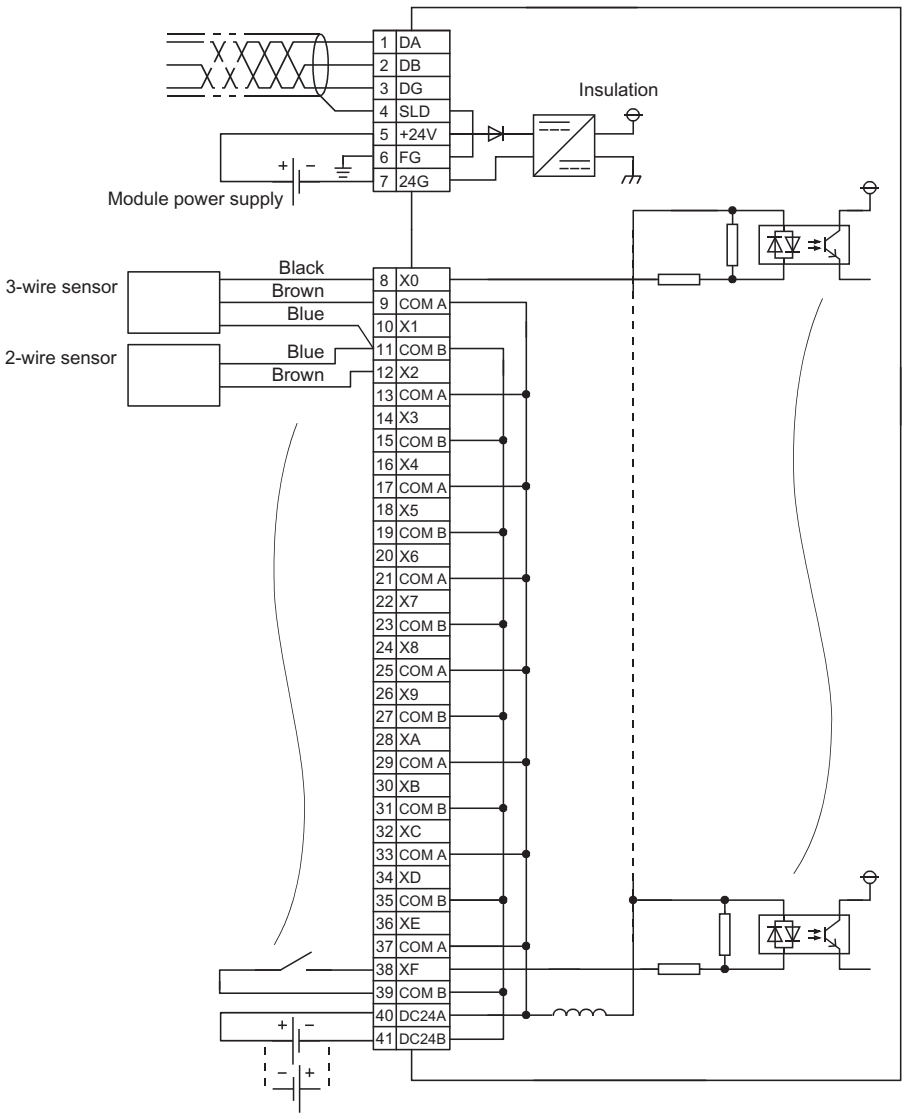

Terminal number	Signal name
TB1	DA
TB2	DB
TB3	DG
TB4	SLD
TB5	+24V
TB6	⏚ (FG)
TB7	24G
TB8	X0
TB9	COM A
TB10	X1
TB11	COM B
TB12	X2
TB13	COM A
TB14	X3
TB15	COM B
TB16	X4
TB17	COM A
TB18	X5
TB19	COM B
TB20	X6
TB21	COM A
TB22	X7
TB23	COM B
TB24	X8
TB25	COM A
TB26	X9
TB27	COM B
TB28	XA
TB29	COM A
TB30	XB
TB31	COM B
TB32	XC
TB33	COM A
TB34	XD
TB35	COM B
TB36	XE
TB37	COM A
TB38	XF
TB39	COM B
TB40	DC24A
TB41	DC24B

4 - 12

4.1.9 AJ65SBTB3-16D5 5VDC input module (positive common (sink), negative common (source) loading)

Item \ Type			DC input module	
			AJ65SBTB3-16D5	Appearance
Number of input points			16 points	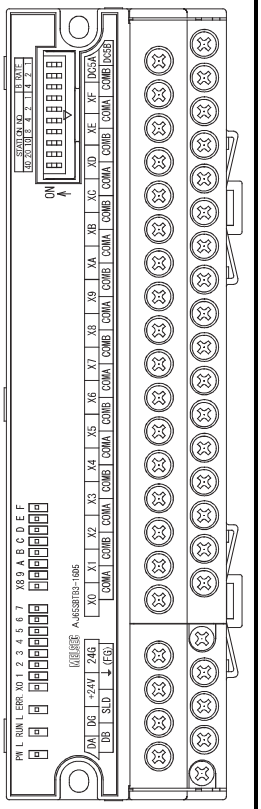
Isolation method			Photocoupler	
Rated input voltage			5VDC (ripple ratio: within 5%)	
Rated input current			Approx. 4mA	
Operating voltage range			4.25 to 6VDC	
Max. number of simultaneous input points			100%	
ON voltage/ON current			3.5VDC or higher/2mA or higher	
OFF voltage/OFF current			1.5VDC or lower/1mA or lower	
Input resistance			Approx. 1.0kΩ	
Response time		OFF→ON	1.5ms or less (at 5VDC)	
		ON→OFF	1.5ms or less (at 5VDC)	
Wiring method for common			16 points/common (3-wire, terminal block type)	
Input type			Positive/negative common shared type (sink/source shared type)	
Supply current for connected device			1.0A or lower/common	
Number of occupied stations			32-point assignment/station (16 points used)	
Module power supply		Voltage	24VDC (ripple ratio: within 5%) (allowable voltage range: 20.4 to 26.4VDC)	
		Current	30mA or lower (at 24VDC and all points ON)	
Noise immunity			Noise voltage 500Vp-p, noise width 1μs, noise frequency 25 to 60Hz (DC type noise simulator condition)	
Withstand voltage			500VAC for 1 minute between all DC external terminals and ground	
Insulation resistance			10MΩ or higher between all DC external terminals and ground (500VDC insulation resistance tester)	
Protection degree			IP2X	
Weight			0.25kg	
External connection system	Communication part, module power supply part		7-point two-piece terminal block [Transmission circuit, module power supply, FG] M3×5.2 screw (tightening torque range: 0.59 to 0.88N•m) Applicable solderless terminal: 2 or less	
	I/O power supply part, I/O part		34-point direct-mount terminal block [I/O power supply, I/O signal] M3×5.2 screw (tightening torque range: 0.59 to 0.88N•m) Applicable solderless terminal: 2 or less	
Module mounting screw			M4 screw with plain washer finished round (tightening torque range: 0.78 to 1.08N•m) Mountable with a DIN rail in 6 orientations	
Applicable DIN rail			TH35-7.5Fe, TH35-7.5Al (compliant with IEC 60715 and JIS C 2812)	
Applicable solderless terminal			• RAV1.25-3 (compliant with JIS C 2805) [Applicable wire size: 0.3 to 1.25mm^2 (22 to 16 AWG) stranded wire] • V2-MS3, RAP2-3SL, TGV2-3N [Applicable wire size: 1.25 to 2.0mm^2 (16 to 14 AWG) stranded wire]	
Wire	Material		Copper	
	Temperature rating		75°C or more	
Accessory			User's manual	

* For applicable solderless terminals connected to the terminal block, refer to the table above. Use applicable wires for the solderless terminals and fix them with an appropriate tightening torque. Use UL listed solderless terminals and, for crimping, use a tool recommended by their manufacturer.

4 - 13

AbN
automation

External connection

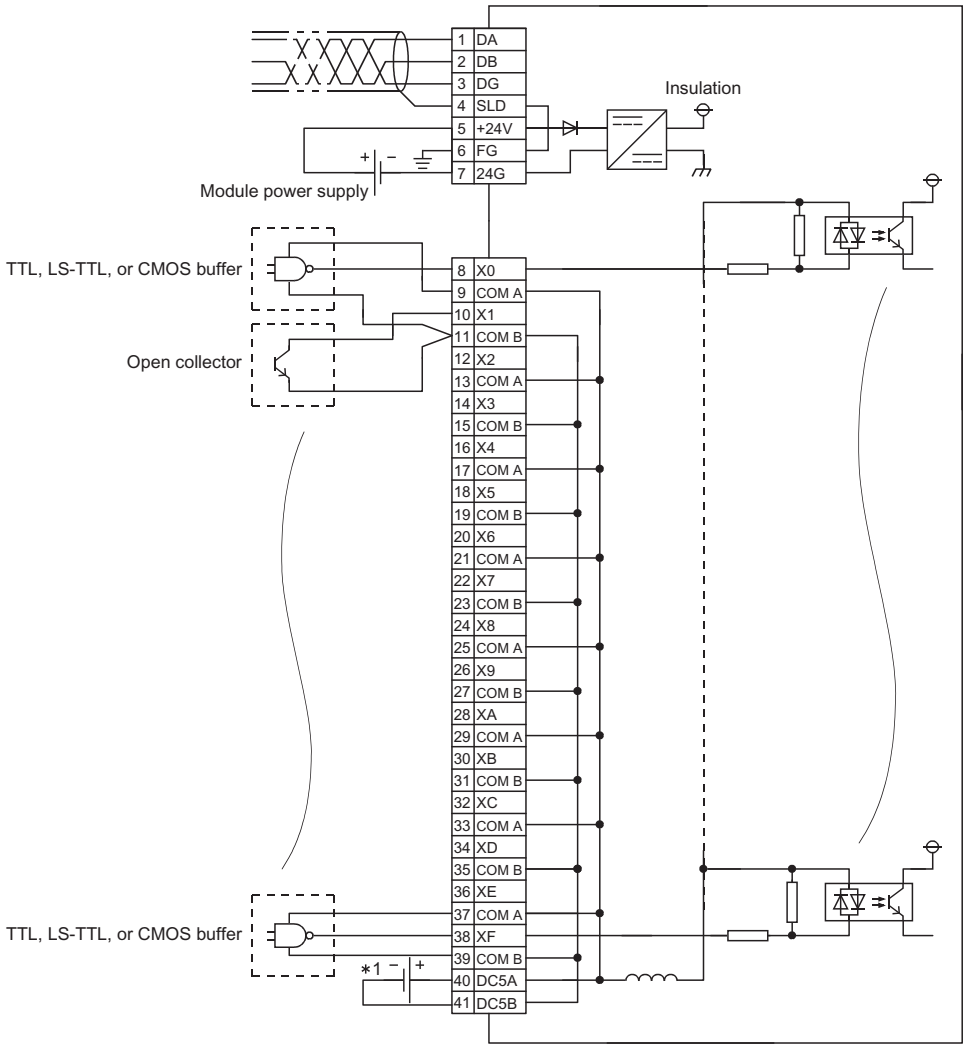

Terminal number	Signal name
TB1	DA
TB2	DB
TB3	DG
TB4	SLD
TB5	+24V
TB6	⏚ (FG)
TB7	24G
TB8	X0
TB9	COM A
TB10	X1
TB11	COM B
TB12	X2
TB13	COM A
TB14	X3
TB15	COM B
TB16	X4
TB17	COM A
TB18	X5
TB19	COM B
TB20	X6
TB21	COM A
TB22	X7
TB23	COM B
TB24	X8
TB25	COM A
TB26	X9
TB27	COM B
TB28	XA
TB29	COM A
TB30	XB
TB31	COM B
TB32	XC
TB33	COM A
TB34	XD
TB35	COM B
TB36	XE
TB37	COM A
TB38	XF
TB39	COM B
TB40	DC5A
TB41	DC5B

For TTL, LS-TTL, or CMOS buffer (positive common) connection

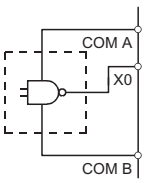

For a sensor (negative common) connection*2

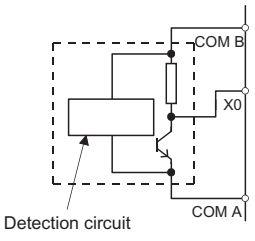

* 1: Polarity to connect an external power supply for TTL, LS-TTL, and CMOS buffer (positive common) connection.
For a sensor (negative common) connection, connect the negative pole to DC5A and the positive pole to DC5B.
* 2: For connection of TTL output (source type) sensor, use a sensor with a built-in pull-up resistor or provide a pull-up resistor in the circuit.

4 - 14

4.1.10 AJ65SBTB1-32D 24VDC input module (positive common (sink), negative common (source) loading)

Item \ Type			DC input module: AJ65SBTB1-32D
Number of input points			32 points
Isolation method			Photocoupler
Rated input voltage			24VDC (ripple ratio: within 5%)
Rated input current			Approx. 7mA
Operating voltage range			19.2 to 26.4VDC
Max. number of simultaneous input points			100%
ON voltage/ON current			14VDC or higher/3.5mA or higher
OFF voltage/OFF current			6VDC or lower/1.7mA or lower
Input resistance			Approx. 3.3kΩ
Response time		OFF→ON	1.5ms or less (at 24VDC)
		ON→OFF	1.5ms or less (at 24VDC)
Wiring method for common			32 points/common (2 points) (1-wire, terminal block type)
Input type			Positive/negative common shared type (sink/source shared type)
Number of occupied stations			32-point assignment/station (32 points used)
Module power supply		Voltage	24VDC (ripple ratio: within 5%) (allowable voltage range: 20.4 to 26.4VDC)
		Current	45mA or lower (at 24VDC and all points ON)
Noise immunity			Noise voltage 500Vp-p, noise width 1μs, noise frequency 25 to 60Hz (DC type noise simulator condition)
Withstand voltage			500VAC for 1 minute between all DC external terminals and ground
Insulation resistance			10MΩ or higher between all DC external terminals and ground (500VDC insulation resistance tester)
Protection degree			IP2X
Weight			0.25kg
External connection system	Communication part, module power supply part		7-point two-piece terminal block [Transmission circuit, module power supply, FG] M3×5.2 screw (tightening torque range: 0.59 to 0.88N•m) Applicable solderless terminal: 2 or less
	I/O power supply part, I/O part		34-point direct-mount terminal block [I/O power supply, I/O signal] M3×5.2 screw(tightening torque range: 0.59 to 0.88N•m) Applicable solderless terminal: 2 or less
Module mounting screw			M4 screw with plain washer finished round (tightening torque range: 0.78 to 1.08N•m) Mountable with a DIN rail in 6 orientations
Applicable DIN rail			TH35-7.5Fe, TH35-7.5Al (compliant with IEC 60715 and JIS C 2812)
Applicable solderless terminal			• RAV1.25-3 (compliant with JIS C 2805) [Applicable wire size: 0.3 to 1.25mm^2 (22 to 16 AWG) stranded wire] • V2-MS3, RAP2-3SL, TGV2-3N [Applicable wire size: 1.25 to 2.0mm^2 (16 to 14 AWG) stranded wire]
Wire	Material		Copper
	Temperature rating		75°C or more
Accessory			User's manual

Appearance

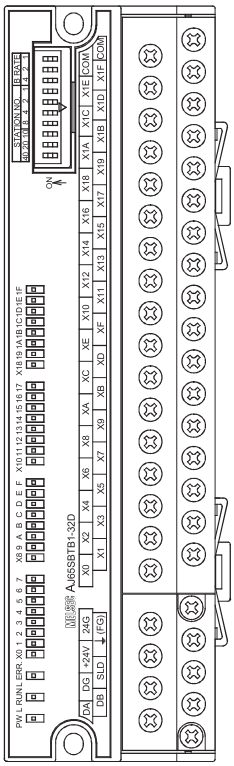

* For applicable solderless terminals connected to the terminal block, refer to the table above. Use applicable wires for the solderless terminals and fix them with an appropriate tightening torque. Use UL listed solderless terminals and, for crimping, use a tool recommended by their manufacturer.

4 - 15

AbN
automation

External connection

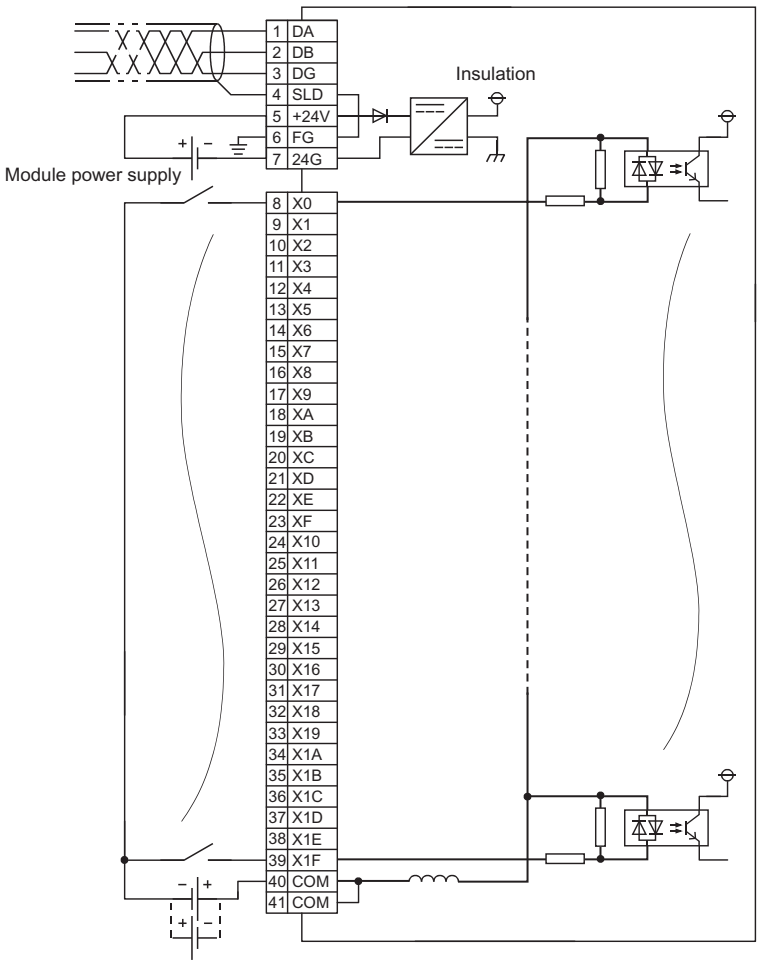

Terminal number	Signal name
TB1	DA
TB2	DB
TB3	DG
TB4	SLD
TB5	+24V
TB6	⏚ (FG)
TB7	24G
TB8	X0
TB9	X1
TB10	X2
TB11	X3
TB12	X4
TB13	X5
TB14	X6
TB15	X7
TB16	X8
TB17	X9
TB18	XA
TB19	XB
TB20	XC
TB21	XD
TB22	XE
TB23	XF
TB24	X10
TB25	X11
TB26	X12
TB27	X13
TB28	X14
TB29	X15
TB30	X16
TB31	X17
TB32	X18
TB33	X19
TB34	X1A
TB35	X1B
TB36	X1C
TB37	X1D
TB38	X1E
TB39	X1F
TB40	COM
TB41	COM

4 - 16

4.1.11 AJ65SBTB1-32KD 24VDC input module (positive common (sink), negative common (source) loading)

Item \ Type			DC input module				
			AJ65SBTB1-32KD				Appearance
Number of input points			32 points				
Isolation method			Photocoupler				
Rated input voltage			24VDC (ripple ratio: within 5%)				
Rated input current			Approx. 7mA				
Operating voltage range			20.4 to 28.8VDC				
Max. number of simultaneous input points			100% (at 26.4VDC), 50% (at 28.8VDC)				
ON voltage/ON current			14VDC or higher/4mA or higher				
OFF voltage/OFF current			5.5VDC or lower/1.7mA or lower				
Input resistance			Approx. 3.0kΩ				
Response time		Input response speed	0.2ms	1.5ms	5ms	10ms	
		OFF→ON	0.2ms or less	1.5ms or less	5ms or less	10ms or less	
		ON→OFF	0.2ms or less	1.5ms or less	5ms or less	10ms or less	
Wiring method for common			32 points/common (1-wire, terminal block type)				
Input type			Positive/negative common shared type (sink/source shared type)				
Number of occupied stations			32-point assignment/station (32 points used)				
Module power supply		Voltage	24VDC (ripple ratio: within 5%) (allowable voltage range: 20.4 to 26.4VDC)				
		Current	75mA or lower (at 24VDC and all points ON)				
Noise immunity			Noise voltage 500Vp-p, noise width 1μs, noise frequency 25 to 60Hz (DC type noise simulator condition)				
Withstand voltage			500VAC for 1 minute between all DC external terminals and ground				
Insulation resistance			10MΩ or higher between all DC external terminals and ground (500VDC insulation resistance tester)				
Protection degree			IP2X				
Weight			0.26kg				
External connection system	Communication part, module power supply part		7-point two-piece terminal block [Transmission circuit, module power supply, FG] M3×5.2 screw (tightening torque range: 0.59 to 0.88N•m) Applicable solderless terminal: 2 or less				
	I/O power supply part, I/O part		34-point direct-mount terminal block [I/O power supply, I/O signal] M3×5.2 screw (tightening torque range: 0.59 to 0.88N•m) Applicable solderless terminal: 2 or less				
Module mounting screw			M4 screw with plain washer finished round (tightening torque range: 0.78 to 1.08N•m) Mountable with a DIN rail in 6 orientations				
Applicable DIN rail			TH35-7.5Fe, TH35-7.5Al (compliant with IEC 60715 and JIS C 2812)				
Applicable solderless terminal			• RAV1.25-3 (compliant with JIS C 2805) [Applicable wire size: 0.3 to 1.25mm^2 (22 to 16 AWG) stranded wire] • V2-MS3, RAP2-3SL, TGV2-3N [Applicable wire size: 1.25 to 2.0mm^2 (16 to 14 AWG) stranded wire]				
Wire	Material		Copper				
	Temperature rating		75°C or more				
Accessory			User's manual				

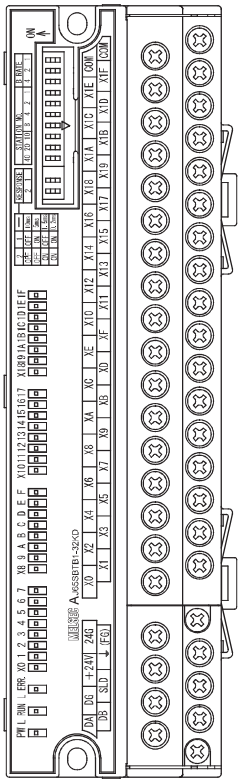

* For applicable solderless terminals connected to the terminal block, refer to the table above. Use applicable wires for the solderless terminals and fix them with an appropriate tightening torque. Use UL listed solderless terminals and, for crimping, use a tool recommended by their manufacturer.

AbN
automation

External connection

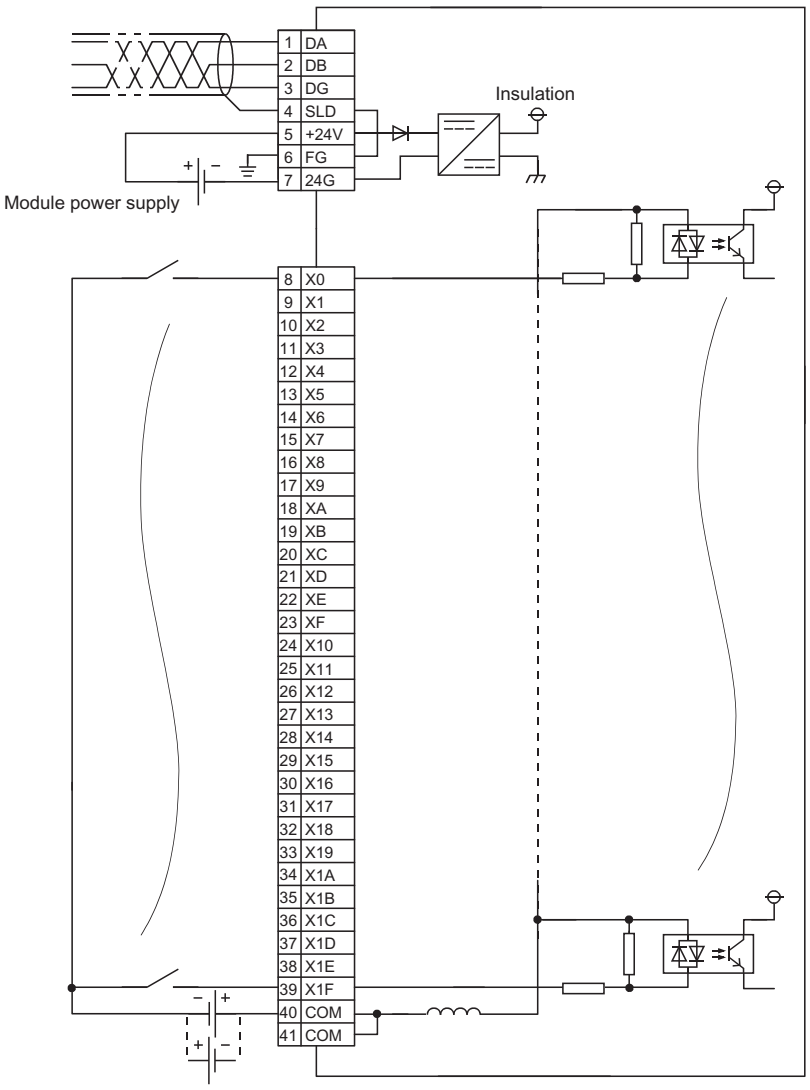

Terminal number	Signal name
TB1	DA
TB2	DB
TB3	DG
TB4	SLD
TB5	+24V
TB6	⏚ (FG)
TB7	24G
TB8	X0
TB9	X1
TB10	X2
TB11	X3
TB12	X4
TB13	X5
TB14	X6
TB15	X7
TB16	X8
TB17	X9
TB18	XA
TB19	XB
TB20	XC
TB21	XD
TB22	XE
TB23	XF
TB24	X10
TB25	X11
TB26	X12
TB27	X13
TB28	X14
TB29	X15
TB30	X16
TB31	X17
TB32	X18
TB33	X19
TB34	X1A
TB35	X1B
TB36	X1C
TB37	X1D
TB38	X1E
TB39	X1F
TB40	COM
TB41	COM

4 - 18

4.1.12 AJ65SBTB1-32D1 24VDC input module (positive common (sink), negative common (source) loading)

Item \ Type		DC input module	
		AJ65SBTB1-32D1	Appearance
Number of input points		32 points	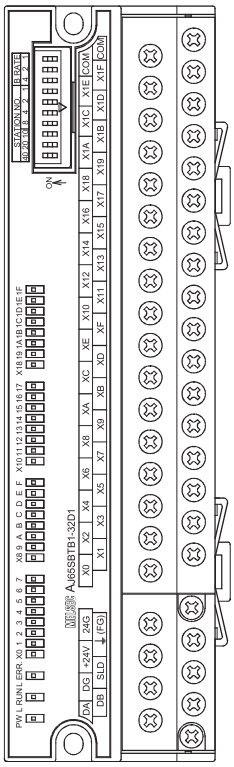
Isolation method		Photocoupler	
Rated input voltage		24VDC (ripple ratio: within 5%)	
Rated input current		Approx. 5mA	
Operating voltage range		19.2 to 26.4VDC	
Max. number of simultaneous input points		100%	
ON voltage/ON current		15VDC or higher/3mA or higher	
OFF voltage/OFF current		3VDC or lower/0.5mA or lower	
Input resistance		Approx. 4.7kΩ	
Response time	OFF→ON	0.2ms or less (at 24VDC)	
	ON→OFF	0.2ms or less (at 24VDC)	
Wiring method for common		32 points/common (2 points) (1-wire, terminal block type)	
Input type		Positive/negative common shared type (sink/source shared type)	
Number of occupied stations		32-point assignment/station (32 points used)	
Module power supply	Voltage	24VDC (ripple ratio: within 5%) (allowable voltage range: 20.4 to 26.4VDC)	
	Current	50mA or lower (at 24VDC and all points ON)	
Noise immunity		Noise voltage 500Vp-p, noise width 1μs, noise frequency 25 to 60Hz (DC type noise simulator condition)	
Withstand voltage		500VAC for 1 minute between all DC external terminals and ground	
Insulation resistance		10MΩ or higher between all DC external terminals and ground (500VDC insulation resistance tester)	
Protection degree		IP2X	
Weight		0.25kg	
External connection system	Communication part, module power supply part	7-point two-piece terminal block [Transmission circuit, module power supply, FG] M3×5.2 screw (tightening torque range: 0.59 to 0.88N•m) Applicable solderless terminal: 2 or less	
	I/O power supply part, I/O part	34-point direct-mount terminal block [I/O power supply, I/O signal] M3×5.2 screw (tightening torque range: 0.59 to 0.88N•m) Applicable solderless terminal: 2 or less	
Module mounting screw		M4 screw with plain washer finished round (tightening torque range: 0.78 to 1.08N•m) Mountable with a DIN rail in 6 orientations	
Applicable DIN rail		TH35-7.5Fe, TH35-7.5Al (compliant with IEC 60715 and JIS C 2812)	
Applicable solderless terminal		• RAV1.25-3 (compliant with JIS C 2805) [Applicable wire size: 0.3 to 1.25mm^2 (22 to 16 AWG) stranded wire] • V2-MS3, RAP2-3SL, TGV2-3N [Applicable wire size: 1.25 to 2.0mm^2 (16 to 14 AWG) stranded wire]	
Wire	Material	Copper	
	Temperature rating	75°C or more	
Accessory		User's manual	

* For applicable solderless terminals connected to the terminal block, refer to the table above. Use applicable wires for the solderless terminals and fix them with an appropriate tightening torque. Use UL listed solderless terminals and, for crimping, use a tool recommended by their manufacturer.

4 - 19

AbN
automation

External connection

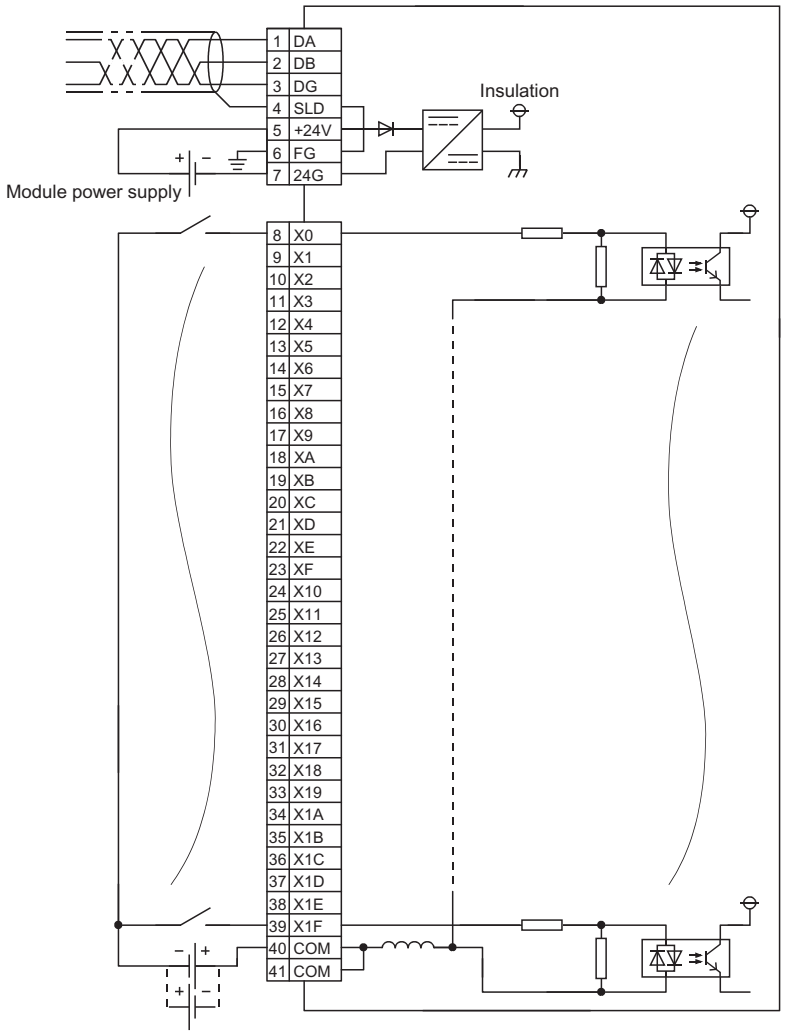

Terminal number	Signal name
TB1	DA
TB2	DB
TB3	DG
TB4	SLD
TB5	+24V
TB6	⏚ (FG)
TB7	24G
TB8	X0
TB9	X1
TB10	X2
TB11	X3
TB12	X4
TB13	X5
TB14	X6
TB15	X7
TB16	X8
TB17	X9
TB18	XA
TB19	XB
TB20	XC
TB21	XD
TB22	XE
TB23	XF
TB24	X10
TB25	X11
TB26	X12
TB27	X13
TB28	X14
TB29	X15
TB30	X16
TB31	X17
TB32	X18
TB33	X19
TB34	X1A
TB35	X1B
TB36	X1C
TB37	X1D
TB38	X1E
TB39	X1F
TB40	COM
TB41	COM

4 - 20

4.1.13 AJ65SBTB1-32D5 5VDC input module (positive common (sink), negative common (source) loading)

Item \ Type			DC input module	
			AJ65SBTB1-32D5	Appearance
Number of input points			32 points	
Isolation method			Photocoupler	
Rated input voltage			5VDC (ripple ratio: within 5%)	
Rated input current			Approx. 4mA	
Operating voltage range			4.25 to 6VDC	
Max. number of simultaneous input points			100%	
ON voltage/ON current			3.5VDC or higher/2mA or higher	
OFF voltage/OFF current			1.5VDC or lower/1mA or lower	
Input resistance			Approx. 1.0kΩ	
Response time		OFF→ON	1.5ms or less (at 5VDC)	
		ON→OFF	1.5ms or less (at 5VDC)	
Wiring method for common			32 points/common (1-wire, terminal block type)	
Input type			Positive/negative common shared type (sink/source shared type)	
Number of occupied stations			32-point assignment/station (32 points used)	
Module power supply		Voltage	24VDC (ripple ratio: within 5%) (allowable voltage range: 20.4 to 26.4VDC)	
		Current	35mA or lower (at 24VDC and all points ON)	
Noise immunity			Noise voltage 500Vp-p, noise width 1μs, noise frequency 25 to 60Hz (DC type noise simulator condition)	
Withstand voltage			500VAC for 1 minute between all DC external terminals and ground	
Insulation resistance			10MΩ or higher between all DC external terminals and ground (500VDC insulation resistance tester)	
Protection degree			IP2X	
Weight			0.26kg	
External connection system	Communication part, module power supply part		7-point two-piece terminal block [Transmission circuit, module power supply, FG] M3×5.2 screw (tightening torque range: 0.59 to 0.88N•m) Applicable solderless terminal: 2 or less	
	I/O power supply part, I/O part		34-point direct-mount terminal block [I/O power supply, I/O signal] M3×5.2 screw (tightening torque range: 0.59 to 0.88N•m) Applicable solderless terminal: 2 or less	
Module mounting screw			M4 screw with plain washer finished round (tightening torque range: 0.78 to 1.08N•m) Mountable with a DIN rail in 6 orientations	
Applicable DIN rail			TH35-7.5Fe, TH35-7.5Al (compliant with IEC 60715 and JIS C 2812)	
Applicable solderless terminal			• RAV1.25-3 (compliant with JIS C 2805) [Applicable wire size: 0.3 to 1.25mm^2 (22 to 16 AWG) stranded wire] • V2-MS3, RAP2-3SL, TGV2-3N [Applicable wire size: 1.25 to 2.0mm^2 (16 to 14 AWG) stranded wire]	
Wire	Material		Copper	
	Temperature rating		75°C or more	
Accessory			User's manual	

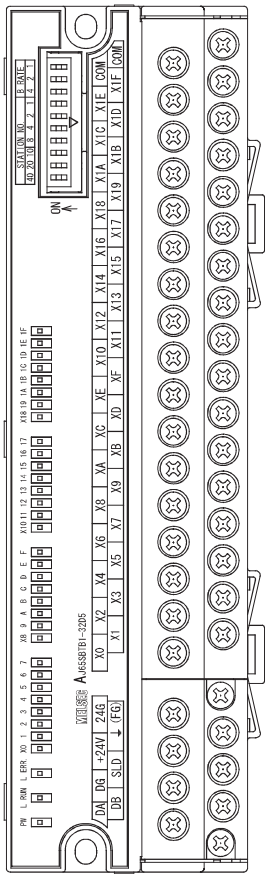

* For applicable solderless terminals connected to the terminal block, refer to the table above. Use applicable wires for the solderless terminals and fix them with an appropriate tightening torque. Use UL listed solderless terminals and, for crimping, use a tool recommended by their manufacturer.

4 - 21

AbN
automation

External connection

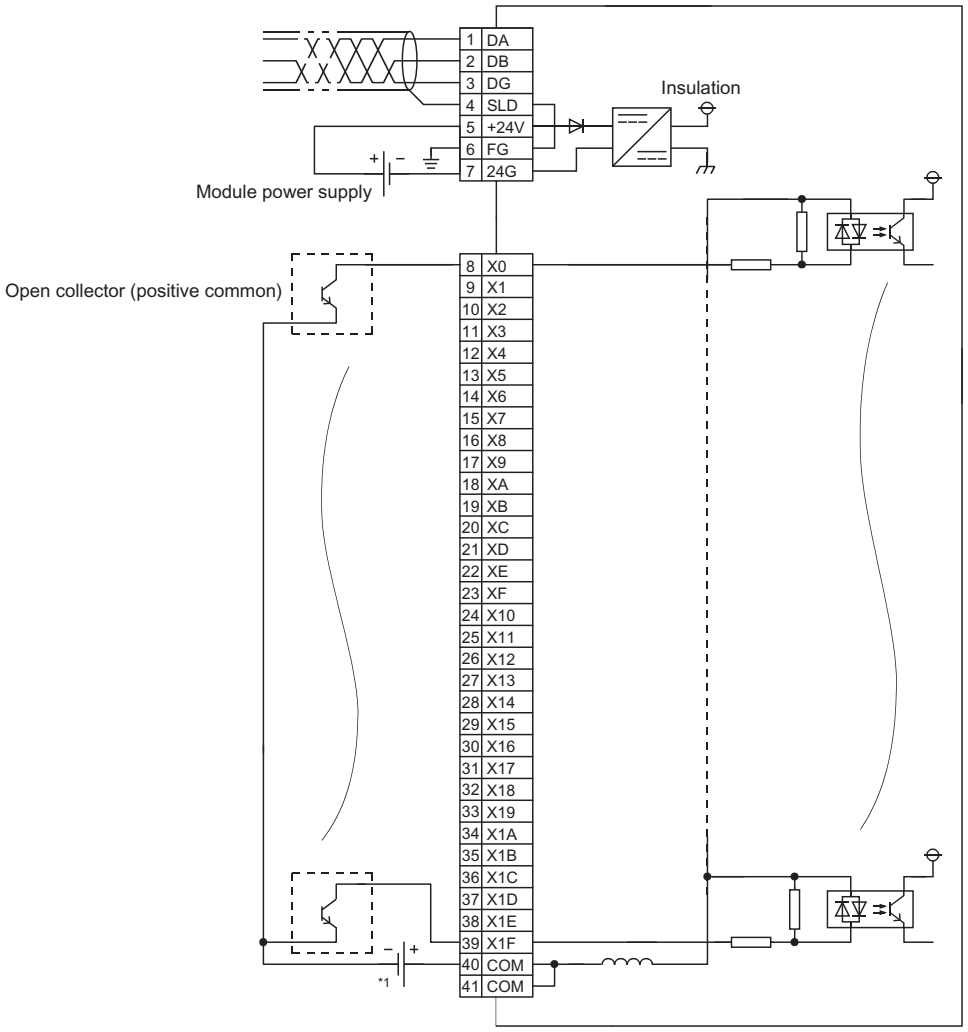

Terminal number	Signal name
TB1	DA
TB2	DB
TB3	DG
TB4	SLD
TB5	+24V
TB6	⏚ (FG)
TB7	24G
TB8	X0
TB9	X1
TB10	X2
TB11	X3
TB12	X4
TB13	X5
TB14	X6
TB15	X7
TB16	X8
TB17	X9
TB18	XA
TB19	XB
TB20	XC
TB21	XD
TB22	XE
TB23	XF
TB24	X10
TB25	X11
TB26	X12
TB27	X13
TB28	X14
TB29	X15
TB30	X16
TB31	X17
TB32	X18
TB33	X19
TB34	X1A
TB35	X1B
TB36	X1C
TB37	X1D
TB38	X1E
TB39	X1F
TB40	COM
TB41	COM

For TTL, LS-TTL, or CMOS buffer (positive common) connection

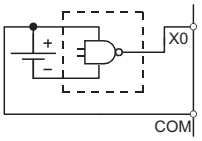

For a sensor (negative common) connection *2

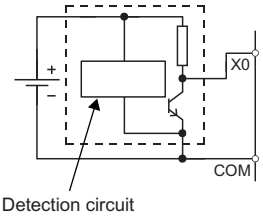

* 1: Polarity to connect an external power supply for TTL, LS-TTL, and CMOS buffer (positive common) connection.
For a sensor (negative common) connection, connect the negative pole to COM.

* 2: For connection of TTL output (source type) sensor, use a sensor with a built-in pull-up resistor or provide a pull-up resistor in the circuit.

4 - 22

4.1.14 AJ65DBTB1-32D 24VDC input module (positive common (sink), negative common (source) loading)

Item \ Type		DC input module	
		AJ65DBTB1-32D	Appearance
Number of input points		32 points	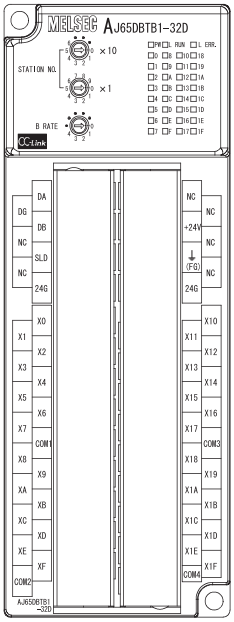
Isolation method		Photocoupler	
Rated input voltage		24VDC (ripple ratio: within 5%)	
Rated input current		Approx. 5mA	
Operating voltage range		20.4 to 31.2VDC	
Max. number of simultaneous input points		100% (at 26.4VDC)	
ON voltage/ON current		15VDC or higher/3mA or higher	
OFF voltage/OFF current		5VDC or lower/1.5mA or lower	
Input resistance		Approx. 4.7kΩ	
Response time	OFF→ON	10ms or less (at 24VDC)	
	ON→OFF	10ms or less (at 24VDC)	
Wiring method for common		16 points/common (2 points) (1-wire, terminal block type)	
Input type		Positive/negative common shared type (sink/source shared type)	
Number of occupied stations		32-point assignment/station (32 points used)	
Module power supply	Voltage	24VDC (ripple ratio: within 5%) (allowable voltage range: 20.4 to 26.4VDC)	
	Current	45mA or lower (at 24VDC and all points ON)	
Noise immunity		Noise voltage 500Vp-p, noise width 1μs, noise frequency 25 to 60Hz (DC type noise simulator condition)	
Withstand voltage		500VAC for 1 minute between all DC external terminals and ground	
Insulation resistance		10MΩ or higher between all DC external terminals and ground (500VDC insulation resistance tester)	
Protection degree		IP2X	
Weight		0.6kg	
External connection system		50-point terminal block [Transmission circuit, module power supply, FG, I/O power supply, I/O signal] M3.5×7 screw (tightening torque range: 0.68 to 0.92N•m) Applicable solderless terminal: 2 or less	
Module mounting screw		M4 screw with plain washer finished round (tightening torque range: 0.78 to 1.08N•m)	
Applicable solderless terminal		• R1.25-3.5 (compliant with JIS C 2805) [Applicable wire size: 0.3 to 1.25mm^2 (22 to 16 AWG) stranded wire] • RAV2-3.5 (compliant with JIS C 2805) [Applicable wire size: 1.25 to 2.0mm^2 (16 to 14 AWG) stranded wire]	
Wire	Material	Copper	
	Temperature rating	75°C or more	
Accessory		User's manual	
Part sold separately		A6DIN1C, A2CCOM-TB	

* For applicable solderless terminals connected to the terminal block, refer to the table above. Use applicable wires for the solderless terminals and fix them with an appropriate tightening torque. Use UL listed solderless terminals and, for crimping, use a tool recommended by their manufacturer.

External connection

Terminal number	Signal name
TB1	DA
TB2	DG
TB3	DB
TB4	Empty
TB5	SLD
TB6	Empty
TB7	24G
TB8	X0
TB9	X1
TB10	X2
TB11	X3
TB12	X4
TB13	X5
TB14	X6
TB15	X7
TB16	COM1
TB17	X8
TB18	X9
TB19	XA
TB20	XB
TB21	XC
TB22	XD
TB23	XE
TB24	XF
TB25	COM2

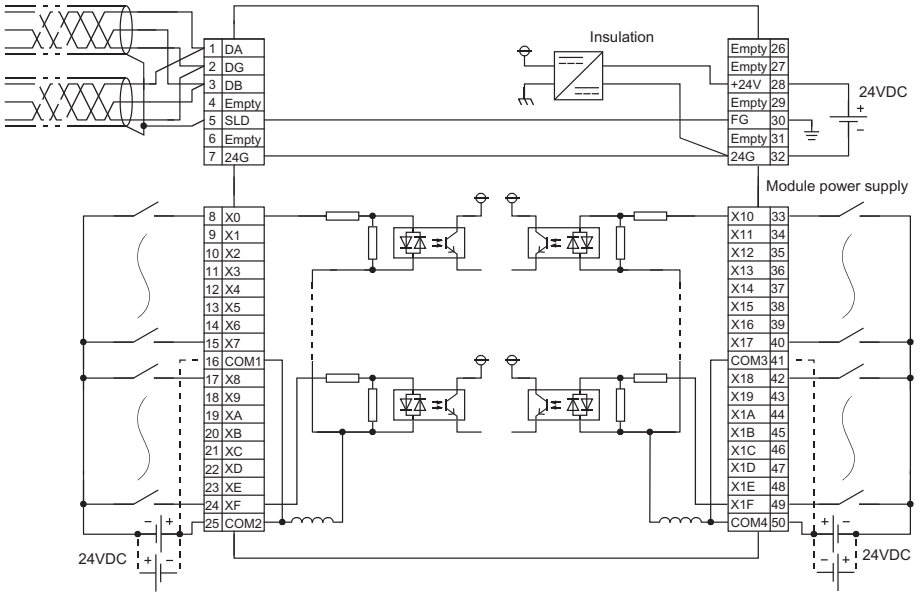

Terminal number	Signal name
TB26	Empty
TB27	Empty
TB28	+24V
TB29	Empty
TB30	⏚ (FG)
TB31	Empty
TB32	24G
TB33	X10
TB34	X11
TB35	X12
TB36	X13
TB37	X14
TB38	X15
TB39	X16
TB40	X17
TB41	COM3
TB42	X18
TB43	X19
TB44	X1A
TB45	X1B
TB46	X1C
TB47	X1D
TB48	X1E
TB49	X1F
TB50	COM4

4 - 24

4.2 Spring Clamp Terminal Block Type Input Module

4.2.1 AJ65VBTS3-16D 24VDC input module (positive common (sink type))

Item \ Type		DC input module	
		AJ65VBTS3-16D	Appearance
Number of input points		16 points	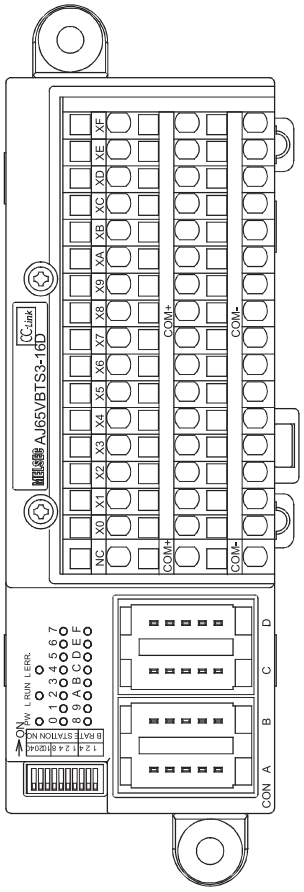
Isolation method		Photocoupler	
Rated input voltage		24VDC (ripple ratio: within 5%)	
Rated input current		Approx. 5mA	
Operating voltage range		19.2 to 26.4VDC	
Max. number of simultaneous input points		100% or 75% (Refer to Section1.3.)	
ON voltage/ON current		14VDC or higher/3.5mA or higher	
OFF voltage/OFF current		6VDC or lower/1.7mA or lower	
Input resistance		Approx. 4.7kΩ	
Response time	OFF→ON	1.5ms or less (at 24VDC)	
	ON→OFF	1.5ms or less (at 24VDC)	
Wiring method for common		16 points/common (3-wire, spring clamp terminal block type)	
Input type		Positive common (sink type)	
Supply current for connected device		1.0A or lower/common	
Number of occupied stations		32-point assignment/station (16points used)	
Module power supply	Voltage	24VDC (ripple ratio: within 5%) (allowable voltage range: 20.4 to 26.4VDC)	
	Current	35mA or lower (at 24VDC and all points ON)	
Noise immunity		Noise voltage 500Vp-p, noise width 1μs, noise frequency 25 to 60Hz (DC type noise simulator condition)	
Withstand voltage		500VAC for 1 minute between all DC external terminals and ground	
Insulation resistance		10MΩ or higher between all DC external terminals and ground (500VDC insulation resistance tester)	
Protection degree		IP1XB	
Weight		0.24kg	
External connection system	Communication part	One-touch connector for communication [Transmission circuit] 5-pin IDC plug is sold separately: A6CON-L5P <Optional> Online connector for communication: A6CON-LJ5P	
	Power supply part	One-touch connector for power supply and FG [Module power supply, FG] 5-pin IDC plug is sold separately: A6CON-PW5P, A6CON-PW5P-SOD <Optional> Online connector for power supply: A6CON-PWJ5P	
	I/O part	2-piece spring clamp terminal block [I/O power supply, I/O signals]	
Applicable DIN rail		TH35-7.5Fe, TH35-7.5Al (compliant with IEC 60715 and JIS C 2812)	
Applicable wire size	Connector for communication	Applicable cable: FANC-110SBH, FA-CBL200PSBH, CS-110	
	Connector for power supply and FG	0.66 to 0.98mm^2 (18 AWG) [ϕ2.2 to 3.0mm (A6CON-PW5P), ϕ2.0 to 2.3mm (A6CON-PW5P-SOD)] Wire diameter: 0.16mm or more Insulating coating material: PVC (heat-resistant)	
	Spring clamp terminal block for I/O	Stranded wire 0.08 to 1.5mm^2 (28 to 16 AWG) ＊1 Wire strip length: 8 to 11mm	
	Applicable solderless terminal	NF0.5 [Applicable wire size: 0.5mm^2] NF0.75 [Applicable wire size: 0.75mm^2] NF1 [Applicable wire size: 0.9 to 1.0mm^2] NF1.5 [Applicable wire size: 1.25 to 1.5mm^2] TGV TC1.25-9T [Applicable wire size: 0.3 to 1.65mm^2] TGWV TC1.25-T9 [Applicable wire size: 0.3 to 1.65mm^2]	
Accessory		User's manual, Holding fixtures for screw installation	

＊1: Insert one wire per terminal.

4 - 25

AbN
automation

External connection

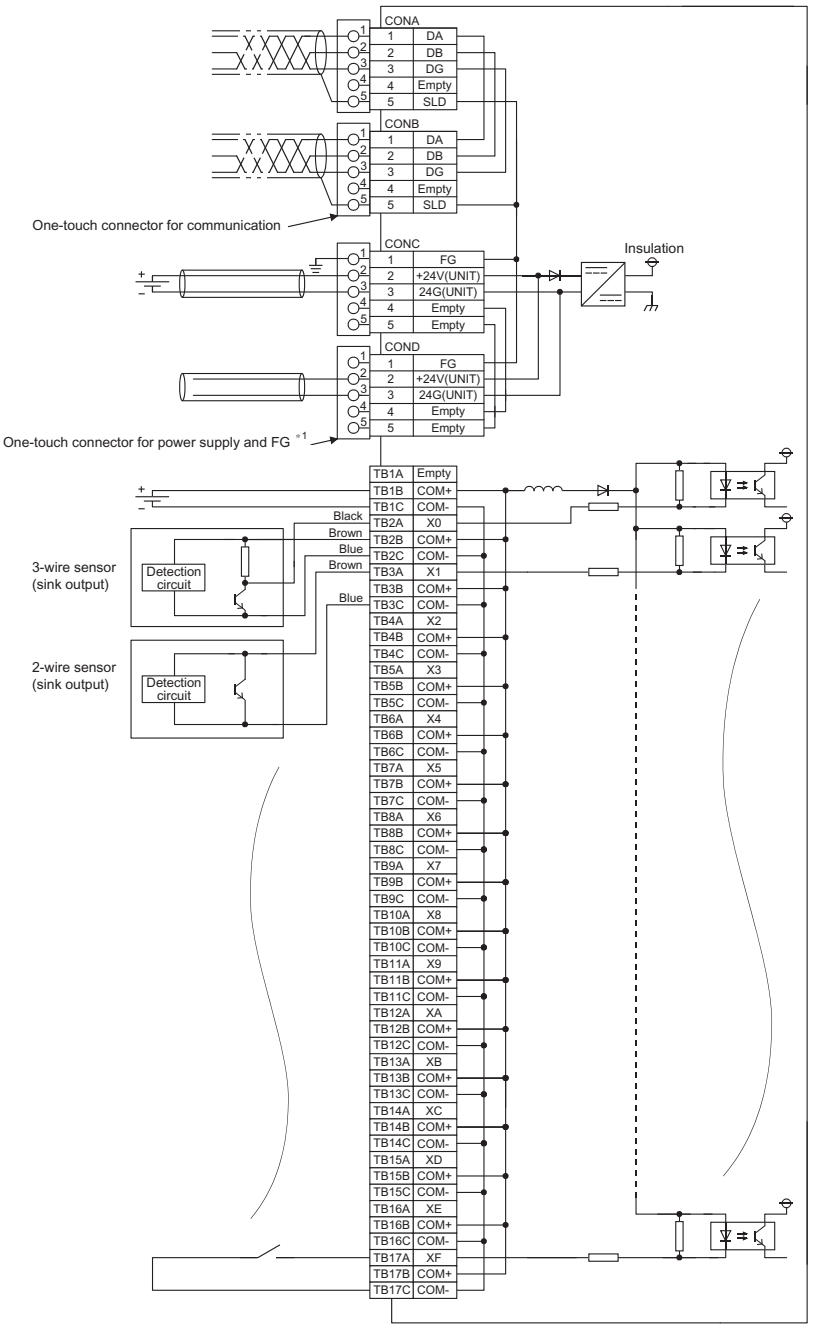

Pin number		Signal name
CON A, B	1	DA
	2	DB
	3	DG
	4	Empty
	5	SLD
CON C, D	1	⏚ (FG)
	2	+24V (UNIT)
	3	24G (UNIT)
	4	Empty
	5	Empty

Terminal block

Column A		Column B		Column C	
1	Empty	1	COM+	1	COM-
2	X0	2	COM+	2	COM-
3	X1	3	COM+	3	COM-
4	X2	4	COM+	4	COM-
5	X3	5	COM+	5	COM-
6	X4	6	COM+	6	COM-
7	X5	7	COM+	7	COM-
8	X6	8	COM+	8	COM-
9	X7	9	COM+	9	COM-
10	X8	10	COM+	10	COM-
11	X9	11	COM+	11	COM-
12	XA	12	COM+	12	COM-
13	XB	13	COM+	13	COM-
14	XC	14	COM+	14	COM-
15	XD	15	COM+	15	COM-
16	XE	16	COM+	16	COM-
17	XF	17	COM+	17	COM-

* 1: Attach an unwired connector plug to an unused one-touch connector for power supply and FG.

Pin layout

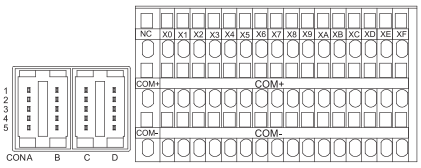

Viewed from the front of the module

4 - 26

External connection

<When using online connectors>

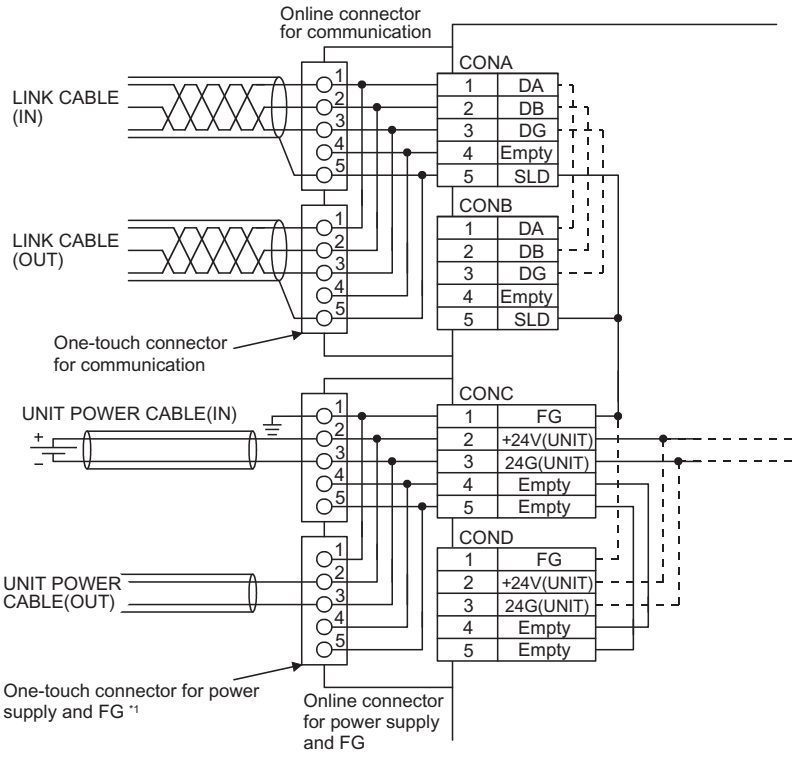

* 1: Attach an unwired connector plug to an unused one-touch connector for power supply and FG.

4 - 27

AbN
automation

4.2.2 AJ65VBTS3-32D 24VDC input module (positive common (sink type))

Item \ Type		DC input module AJ65VBTS3-32D	Appearance
Number of input points		32 points	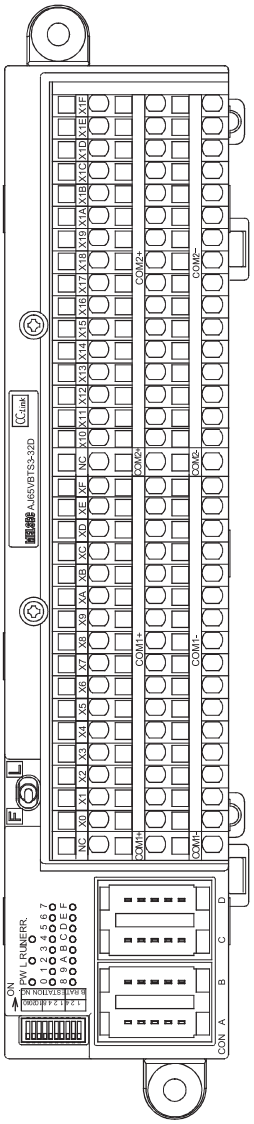
Isolation method		Photocoupler	
Rated input voltage		24VDC (ripple ratio: within 5%)	
Rated input current		Approx. 5mA	
Operating voltage range		19.2 to 26.4VDC	
Max. number of simultaneous input points		100% or 69% (Refer to Section1.3.)	
ON voltage/ON current		14VDC or higher/3.5mA or higher	
OFF voltage/OFF current		6VDC or lower/1.7mA or lower	
Input resistance		Approx. 4.7kΩ	
Response time	OFF→ON	1.5ms or less (at 24VDC)	
	ON→OFF	1.5ms or less (at 24VDC)	
Wiring method for common		16 points/common (3-wire, spring clamp terminal block type)	
Input type		Positive common (sink type)	
Supply current for connected device		2.0A or lower/common	
Number of occupied stations		32-point assignment/station (32 points used)	
Module power supply	Voltage	24VDC (ripple ratio: within 5%) (allowable voltage range: 20.4 to 26.4VDC)	
	Current	40mA or lower (at 24VDC and all points ON)	
Noise immunity		Noise voltage 500Vp-p, noise width 1μs, noise frequency 25 to 60Hz (DC type noise simulator condition)	
Withstand voltage		500VAC for 1 minute between all DC external terminals and ground	
Insulation resistance		10MΩ or higher between all DC external terminals and ground (500VDC insulation resistance tester)	
Protection degree		IP1XB	
Weight		0.41kg	
External connection system	Communication part	One-touch connector for communication [Transmission circuit] 5-pin IDC plug is sold separately: A6CON-L5P <Optional> Online connector for communication: A6CON-LJ5P	
	Power supply part	One-touch connector for power supply and FG [Module power supply, FG] 5-pin IDC plug is sold separately: A6CON-PW5P, A6CON-PW5P-SOD <Optional> Online connector for power supply: A6CON-PWJ5P	
	I/O part	2-piece spring clamp terminal block [I/O power supply, I/O signals]	
Applicable DIN rail		TH35-7.5Fe, TH35-7.5Al (compliant with IEC 60715 and JIS C 2812)	
Applicable wire size	Connector for communication	Applicable cable: FANC-110SBH, FA-CBL200PSBH, CS-110	
	Connector for power supply and FG	0.66 to 0.98mm^2 (18 AWG) [ϕ2.2 to 3.0mm (A6CON-PW5P), ϕ2.0 to 2.3mm (A6CON-PW5P-SOD)] Wire diameter: 0.16mm or more Insulating coating material: PVC (heat-resistant)	
	Spring clamp terminal block for I/O	Stranded wire 0.08 to 1.5mm^2 (28 to 16 AWG) ＊1 Wire strip length: 8 to 11mm	
	Applicable solderless terminal	NF0.5 [Applicable wire size: 0.5mm^2] NF0.75 [Applicable wire size: 0.75mm^2] NF1 [Applicable wire size: 0.9 to 1.0mm^2] NF1.5 [Applicable wire size: 1.25 to 1.5mm^2] TGV TC1.25-9T [Applicable wire size: 0.3 to 1.65mm^2] TGWV TC1.25-T9 [Applicable wire size: 0.3 to 1.65mm^2]	
Accessory		User's manual, Holding fixtures for screw installation	

＊1: Insert one wire per terminal.

4 - 28

External connection

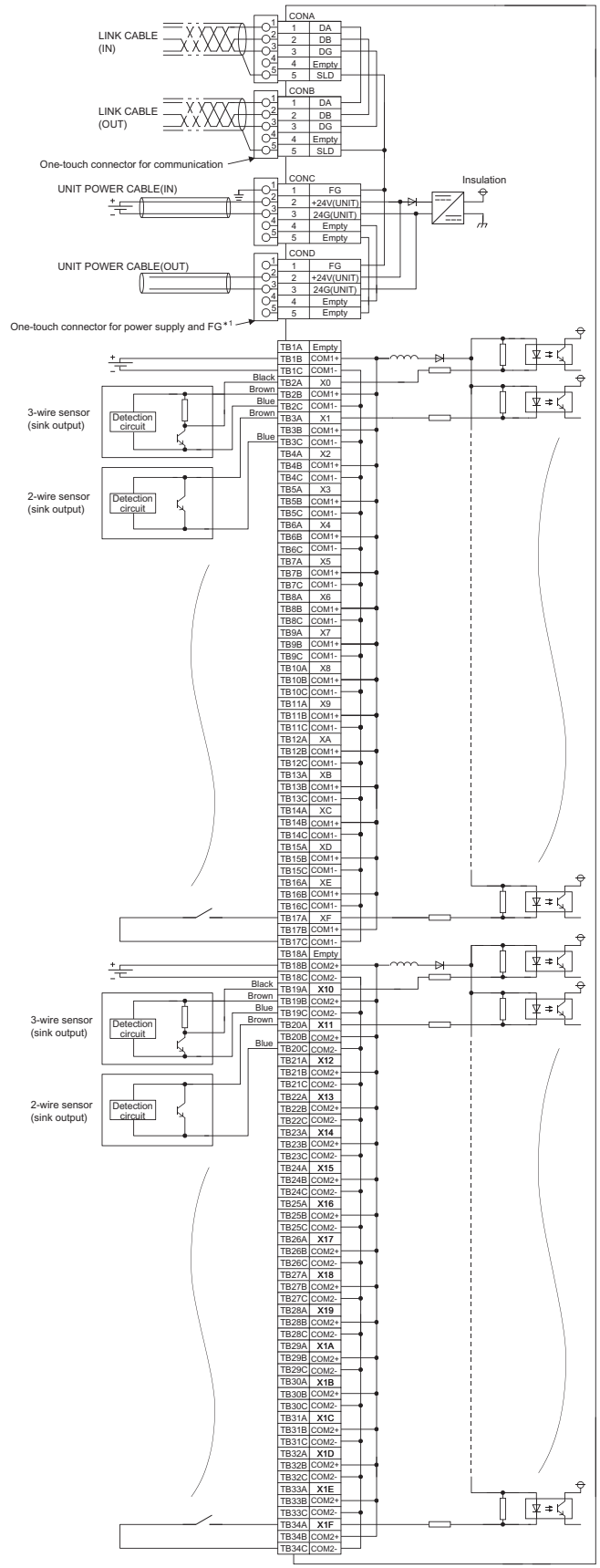

Pin number		Signal name
CON A, B	1	DA
	2	DB
	3	DG
	4	Empty
	5	SLD
CON C, D	1	⏚ (FG)
	2	+24V (UNIT)
	3	24G (UNIT)
	4	Empty
	5	Empty

Terminal block

Column A		Column B		Column C	
1	Empty	1	COM1+	1	COM1-
2	X0	2	COM1+	2	COM1-
3	X1	3	COM1+	3	COM1-
4	X2	4	COM1+	4	COM1-
5	X3	5	COM1+	5	COM1-
6	X4	6	COM1+	6	COM1-
7	X5	7	COM1+	7	COM1-
8	X6	8	COM1+	8	COM1-
9	X7	9	COM1+	9	COM1-
10	X8	10	COM1+	10	COM1-
11	X9	11	COM1+	11	COM1-
12	XA	12	COM1+	12	COM1-
13	XB	13	COM1+	13	COM1-
14	XC	14	COM1+	14	COM1-
15	XD	15	COM1+	15	COM1-
16	XE	16	COM1+	16	COM1-
17	XF	17	COM1+	17	COM1-
18	Empty	18	COM2+	18	COM2-
19	X10	19	COM2+	19	COM2-
20	X11	20	COM2+	20	COM2-
21	X12	21	COM2+	21	COM2-
22	X13	22	COM2+	22	COM2-
23	X14	23	COM2+	23	COM2-
24	X15	24	COM2+	24	COM2-
25	X16	25	COM2+	25	COM2-
26	X17	26	COM2+	26	COM2-
27	X18	27	COM2+	27	COM2-
28	X19	28	COM2+	28	COM2-
29	X1A	29	COM2+	29	COM2-
30	X1B	30	COM2+	30	COM2-
31	X1C	31	COM2+	31	COM2-
32	X1D	32	COM2+	32	COM2-
33	X1E	33	COM2+	33	COM2-
34	X1F	34	COM2+	34	COM2-

* 1: Attach an unwired connector plug to an unused one-touch connector for power supply and FG.

4 - 29

AbN
automation

External connection

<When using online connectors>

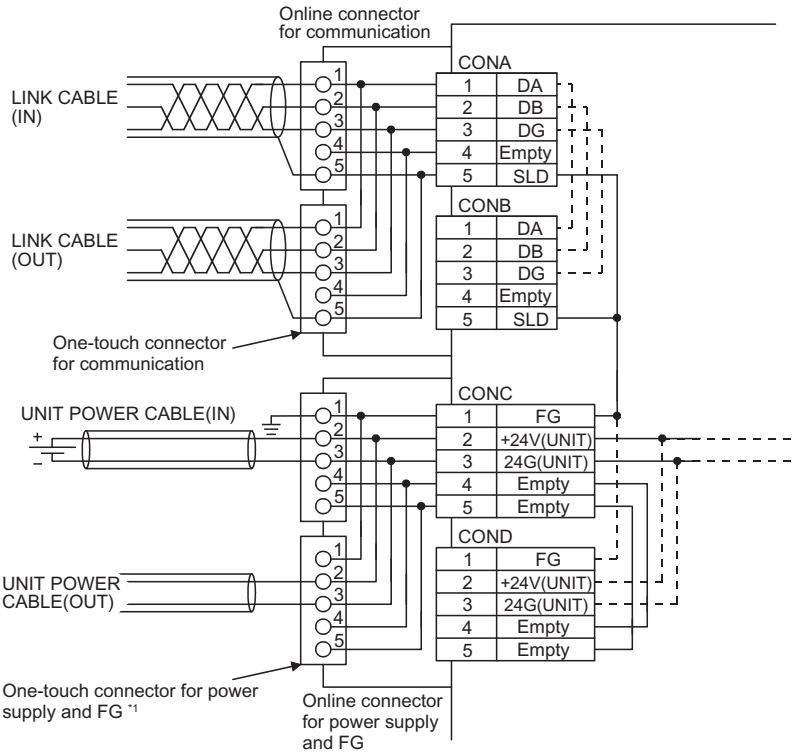

* 1: Attach an unwired connector plug to an unused one-touch connector for power supply and FG.

Pin layout

Viewed from the front of the module

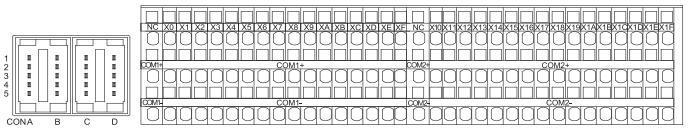

4 - 30

4.3 Sensor Connector (e-CON) Type Input Module

4.3.1 AJ65VBTCE3-8D 24VDC input module (positive common (sink type))

Item \ Type		DC input module	
		AJ65VBTCE3-8D	Appearance
Number of input points		8 points	
Isolation method		Photocoupler	
Rated input voltage		24VDC (ripple ratio: within 5%)	
Rated input current		Approx. 5mA	
Operating voltage range		19.2 to 26.4VDC	
Max. number of simultaneous input points		100%	
ON voltage/ON current		14VDC or higher/3.5mA or higher	
OFF voltage/OFF current		6VDC or lower/1.7mA or lower	
Input resistance		Approx. 4.7kΩ	
Response time	OFF→ON	1.5ms or less (at 24VDC)	
	ON→OFF	1.5ms or less (at 24VDC)	
Wiring method for common		8 points/common (3-wire, sensor connector (e-CON) type)	
Input type		Positive common (sink type)	
Supply current for connected device		1.0A or lower/common	
Number of occupied stations		32-point assignment/station (8 points used)	
Module power supply	Voltage	24VDC (ripple ratio: within 5%) (allowable voltage range: 20.4 to 26.4VDC)	
	Current	30mA or lower (at 24VDC and all points ON)	
Noise immunity		Noise voltage 500Vp-p, noise width 1μs, noise frequency 25 to 60Hz (DC type noise simulator condition)	
Withstand voltage		500VAC for 1 minute between all DC external terminals and ground	
Insulation resistance		10MΩ or higher between all DC external terminals and ground (500VDC insulation resistance tester)	
Protection degree		IP1XB	
Weight		0.10kg	
External connection system	Communication part	One-touch connector for communication [Transmission circuit] 5-pin IDC plug is sold separately: A6CON-L5P <Optional> Online connector for communication: A6CON-LJ5P	
	Power supply part	One-touch connector for power supply and FG [Module power supply, I/O power supply, FG] 5-pin IDC plug is sold separately: A6CON-PW5P, A6CON-PW5P-SOD <Optional> Online connector for power supply: A6CON-PWJ5P	
	I/O part	Sensor connector (e-CON) [I/O signals] 4-pin IDC plug is sold separately. ＊1	
Applicable DIN rail		TH35-7.5Fe, TH35-7.5Al (compliant with IEC 60715 and JIS C 2812)	
Applicable wire size	Connector for communication	Applicable cable: FANC-110SBH, FA-CBL200PSBH, CS-110	
	Connector for power supply and FG	0.66 to 0.98mm^2 (AWG18) [ϕ2.2 to 3.0mm (A6CON-PW5P), ϕ2.0 to 2.3mm (A6CON-PW5P-SOD)] Wire diameter: 0.16mm or more Insulating coating material: PVC (heat-resistant)	
	Connector for I/O	Sensor connector (e-CON). Applicable connector plugs are sold separately. ＊1 (applicable wire size: 0.08 to 0.5mm^2, depending on the connector plug)	
Accessory		User's manual, Holding fixtures for screw installation	

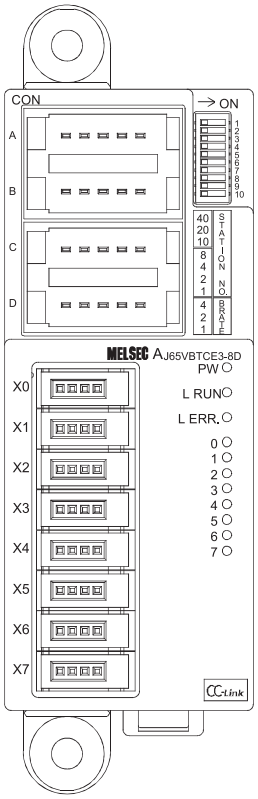

＊1: Refer to Section 1.6.2 for details.

4 - 31

AbN
automation

External connection

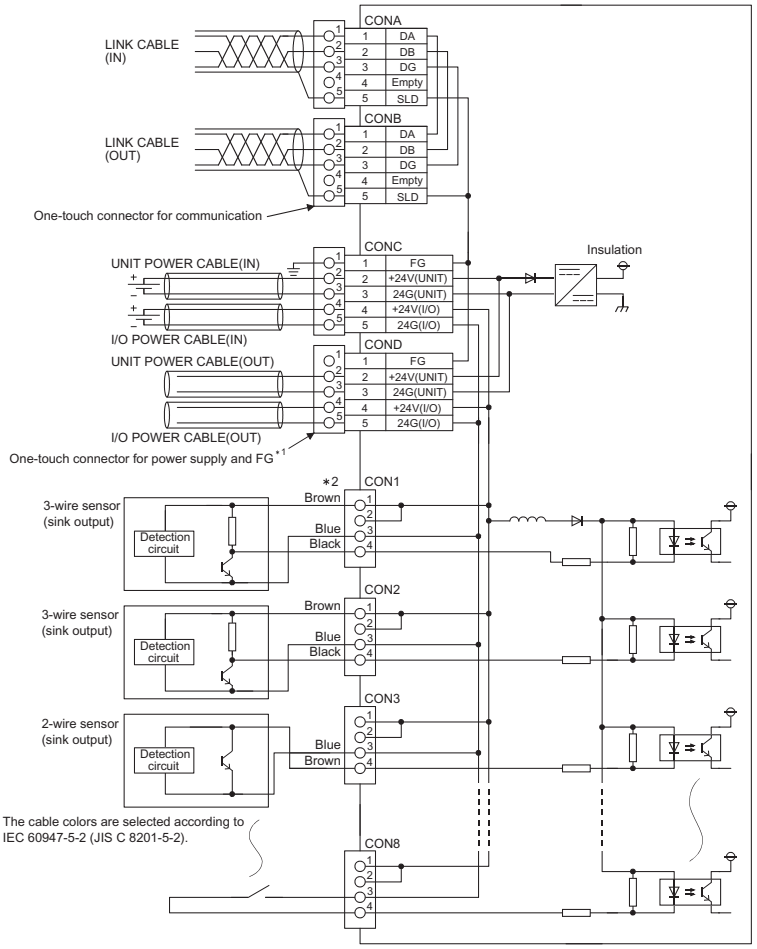

Pin number		Signal name
CON A, B	1	DA
	2	DB
	3	DG
	4	Empty
	5	SLD
CON C, D	1	⏚ (FG)
	2	+24V (UNIT)
	3	24G (UNIT)
	4	+24V (I/O)
	5	24G (I/O)

Pin number		Signal name	Pin layout
CON1 (X0)	1	+24V	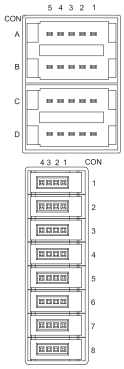
	2	+V	
	3	24G	
	4	X0	
CON2 (X1)	1	+24V	
	2	+V	
	3	24G	
	4	X1	
CON3 (X2)	1	+24V	
	2	+V	
	3	24G	
	4	X2	
CON4 (X3)	1	+24V	
	2	+V	
	3	24G	
	4	X3	
CON5 (X4)	1	+24V	
	2	+V	
	3	24G	
	4	X4	
CON6 (X5)	1	+24V	
	2	+V	
	3	24G	
	4	X5	
CON7 (X6)	1	+24V	Viewed from the front of the module
	2	+V	
	3	24G	
	4	X6	
CON8 (X7)	1	+24V	
	2	+V	
	3	24G	
	4	X7	

* 1: Attach an unwired connector plug to an unused one-touch connector for power supply and FG.
* 2: Wiring the sensor connector (e-CON) incorrectly may cause malfunction or failure due to short circuit of the power supply.

4 - 32

External connection

<When using online connectors>

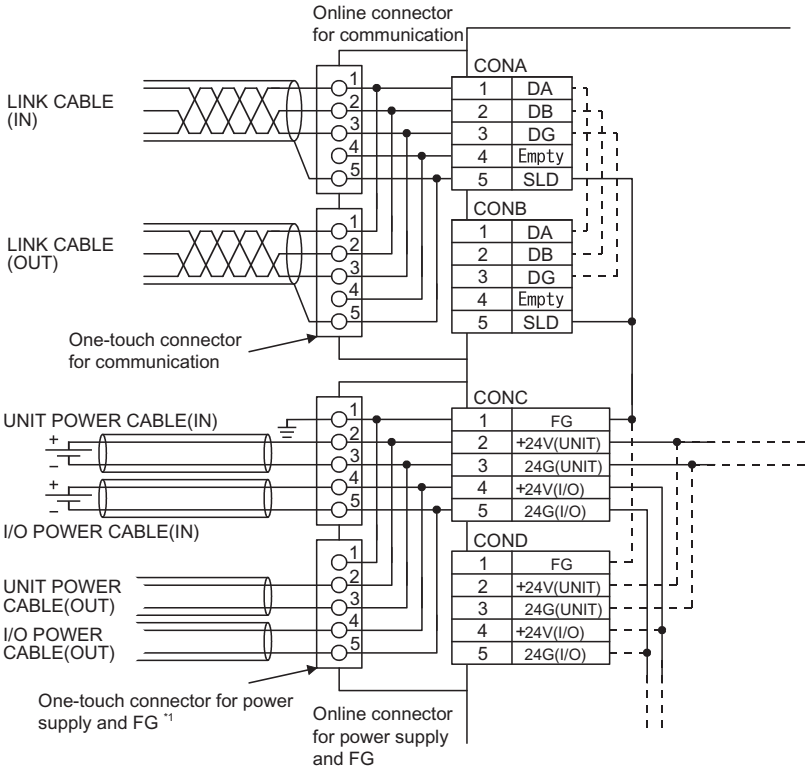

* 1: Attach an unwired connector plug to an unused one-touch connector for power supply and FG.

4 - 33

AbN
automation

4.3.2 AJ65VBTCE3-16D 24VDC input module (positive common (sink type))

Item \ Type		DC input module	
		AJ65VBTCE3-16D	Appearance
Number of input points		16 points	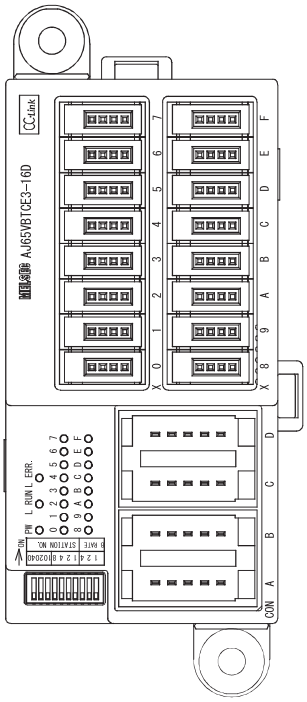
Isolation method		Photocoupler	
Rated input voltage		24VDC (ripple ratio: within 5%)	
Rated input current		Approx. 5mA	
Operating voltage range		19.2 to 26.4VDC	
Max. number of simultaneous input points		100% or 62.5% (Refer to Section 1.3.)	
ON voltage/ON current		14VDC or higher/3.5mA or higher	
OFF voltage/OFF current		6VDC or lower/1.7mA or lower	
Input resistance		Approx. 4.7kΩ	
Response time	OFF→ON	1.5ms or less (at 24VDC)	
	ON→OFF	1.5ms or less (at 24VDC)	
Wiring method for common		16 points/common (3-wire, sensor connector (e-CON) type)	
Input type		Positive common (sink type)	
Supply current for connected device		1.0A or lower/common	
Number of occupied stations		32-point assignment/station (16 points used)	
Module power supply	Voltage	24VDC (ripple ratio: within 5%) (allowable voltage range: 20.4 to 26.4VDC)	
	Current	35mA or lower (at 24VDC and all points ON)	
Noise immunity		Noise voltage 500Vp-p, noise width 1μs, noise frequency 25 to 60Hz (DC type noise simulator condition)	
Withstand voltage		500VAC for 1 minute between all DC external terminals and ground	
Insulation resistance		10MΩ or higher between all DC external terminals and ground (500VDC insulation resistance tester)	
Protection degree		IP1XB	
Weight		0.10kg	
External connection system	Communication part	One-touch connector for communication [Transmission circuit] 5-pin IDC plug is sold separately: A6CON-L5P <Optional> Online connector for communication: A6CON-LJ5P	
	Power supply part	One-touch connector for power supply and FG [Module power supply, I/O power supply, FG] 5-pin IDC plug is sold separately: A6CON-PW5P, A6CON-PW5P-SOD <Optional> Online connector for power supply: A6CON-PWJ5P	
	I/O part	Sensor connector (e-CON) [I/O signals] 4-pin IDC plug is sold separately. ＊1	
Applicable DIN rail		TH35-7.5Fe, TH35-7.5Al (compliant with IEC 60715 and JIS C 2812)	
Applicable wire size	Connector for communication	Applicable cable: FANC-110SBH, FA-CBL200PSBH, CS-110	
	Connector for power supply and FG	0.66 to 0.98mm^2 (18 AWG) [ϕ2.2 to 3.0mm (A6CON-PW5P), ϕ2.0 to 2.3mm (A6CON-PW5P-SOD)] Wire diameter: 0.16mm or more Insulating coating material: PVC (heat-resistant)	
	Connector for I/O	Sensor connector (e-CON). Applicable connector plugs are sold separately. ＊1 (applicable wire size: 0.08 to 0.5mm^2, depending on the connector plug)	
Accessory		User's manual, Holding fixtures for screw installation	

＊1: Refer to Section 1.6.2 for details.

4 - 34

External connection

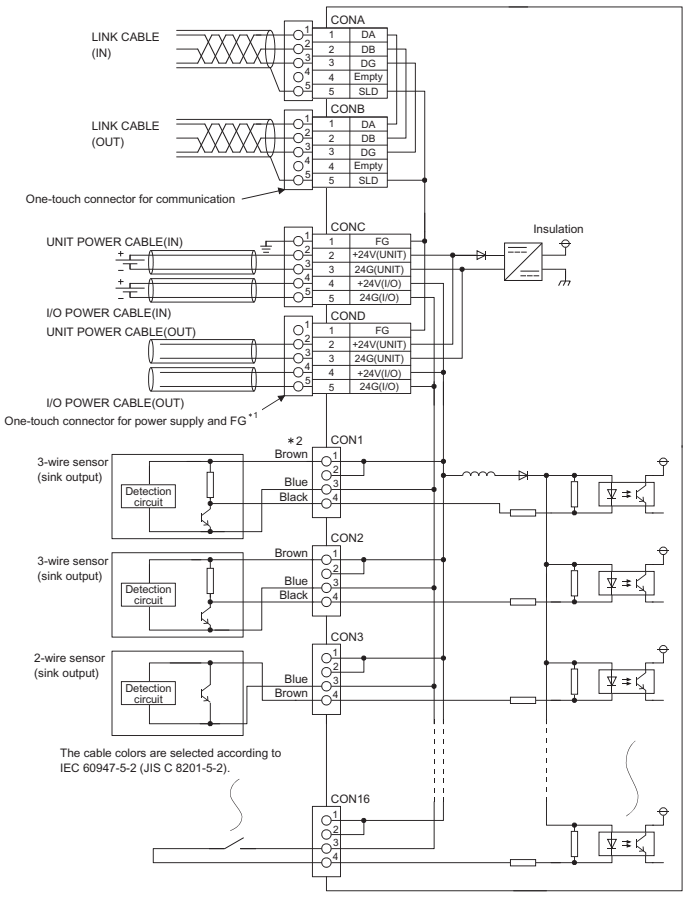

Pin number		Signal name
CON A, B	1	DA
	2	DB
	3	DG
	4	Empty
	5	SLD
CON C, D	1	⏚ (FG)
	2	+24V (UNIT)
	3	24G (UNIT)
	4	+24V (I/O)
	5	24G (I/O)

Pin number		Signal name	Pin number		Signal name	Pin number		Signal name	Pin number		Signal name
CON 1 (X0)	1	+24V	CON 5 (X4)	1	+24V	CON 9 (X8)	1	+24V	CON 13 (XC)	1	+24V
	2	+V		2	+V		2	+V		2	+V
	3	24G		3	24G		3	24G		3	24G
	4	X0		4	X4		4	X8		4	XC
CON 2 (X1)	1	+24V	CON 6 (X5)	1	+24V	CON 10 (X9)	1	+24V	CON 14 (XD)	1	+24V
	2	+V		2	+V		2	+V		2	+V
	3	24G		3	24G		3	24G		3	24G
	4	X1		4	X5		4	X9		4	XD
CON 3 (X2)	1	+24V	CON 7 (X6)	1	+24V	CON 11 (XA)	1	+24V	CON 15 (XE)	1	+24V
	2	+V		2	+V		2	+V		2	+V
	3	24G		3	24G		3	24G		3	24G
	4	X2		4	X6		4	XA		4	XE
CON 4 (X3)	1	+24V	CON 8 (X7)	1	+24V	CON 12 (XB)	1	+24V	CON 16 (XF)	1	+24V
	2	+V		2	+V		2	+V		2	+V
	3	24G		3	24G		3	24G		3	24G
	4	X3		4	X7		4	XB		4	XF

*1: Attach an unwired connector plug to an unused one-touch connector for power supply and FG.
*2: Wiring the sensor connector (e-CON) incorrectly may cause malfunction or failure due to short circuit of the power supply.

Pin layout

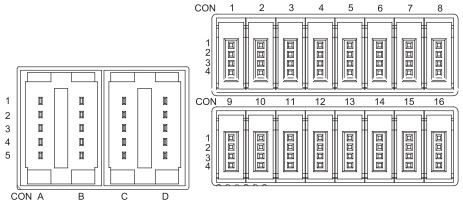

Viewed from the front of the module

4 - 35

AbN
automation

External connection

<When using online connectors>

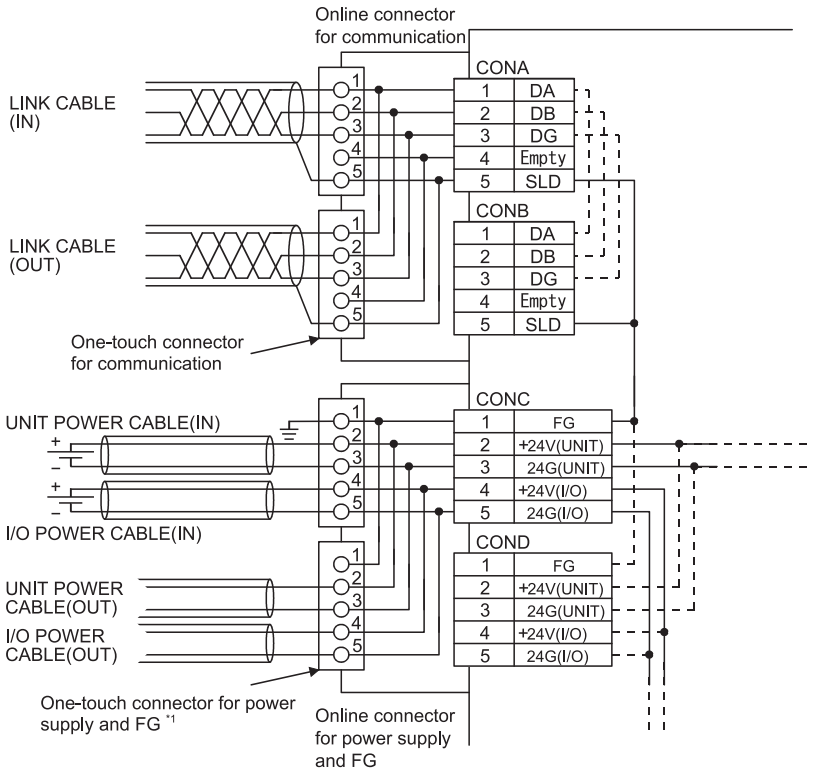

* 1: Attach an unwired connector plug to an unused one-touch connector for power supply and FG.

4 - 36

4.3.3 AJ65VBTCE3-32D 24VDC input module (positive common (sink type))

Specification \ Type		DC input module	
		AJ65VBTCE3-32D	Appearance
Number of input points		32 points	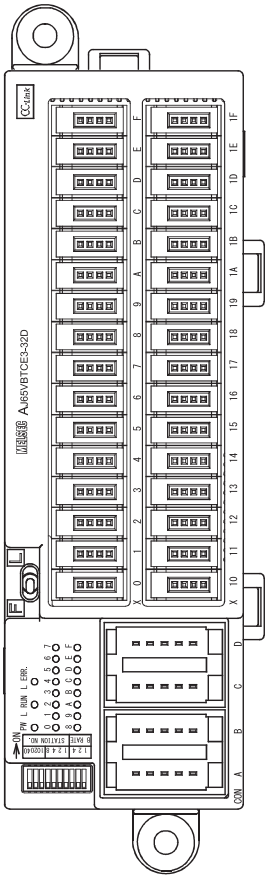
Isolation method		Photocoupler	
Rated input voltage		24VDC (ripple ratio: within 5%)	
Rated input current		Approx. 5mA	
Operating voltage range		19.2 to 26.4VDC	
Max. number of simultaneous input points		100% or 75% (Refer to Section1.3.)	
ON voltage/ON current		14VDC or higher/3.5mA or higher	
OFF voltage/OFF current		6VDC or lower/1.7mA or lower	
Input resistance		Approx. 4.7kΩ	
Response time	OFF→ON	1.5ms or less (at 24VDC)	
	ON→OFF	1.5ms or less (at 24VDC)	
Wiring method for common		32 points/common (3-wire, sensor connector (e-CON) type)	
Input type		Positive common (sink type)	
Supply current for connected device		2.0A or lower/common	
Number of occupied stations		32-point assignment/station (32 points used)	
Module power supply	Voltage	24VDC (ripple ratio: within 5%) (allowable voltage range: 20.4 to 26.4VDC)	
	Current	40mA or lower (at 24VDC and all points ON)	
Noise immunity		Noise voltage 500Vp-p, noise width 1μs, noise frequency 25 to 60Hz (DC type noise simulator condition)	
Withstand voltage		500VAC for 1 minute between all DC external terminals and ground	
Insulation resistance		10MΩ or higher between all DC external terminals and ground (500VDC insulation resistance tester)	
Protection degree		IP1XB	
Weight		0.16kg	
External connection system	Communication part	One-touch connector for communication [Transmission circuit] 5-pin IDC plug is sold separately: A6CON-L5P <Optional> Online connector for communication: A6CON-LJ5P	
	Power supply part	One-touch connector for power supply and FG [Module power supply, I/O power supply, FG] 5-pin IDC plug is sold separately: A6CON-PW5P, A6CON-PW5P-SOD <Optional> Online connector for power supply: A6CON-PWJ5P	
	I/O part	Sensor connector (e-CON) [I/O signals] 4-pin IDC plug is sold separately. ＊1	
Applicable DIN rail		TH35-7.5Fe, TH35-7.5Al (compliant with IEC 60715 and JIS C 2812)	
Applicable wire size	Connector for communication	Applicable cable: FANC-110SBH, FA-CBL200PSBH, CS-110	
	Connector for power supply and FG	0.66 to 0.98mm^2 (18 AWG) [ϕ2.2 to 3.0mm (A6CON-PW5P), ϕ2.0 to 2.3mm (A6CON-PW5P-SOD)] Wire diameter: 0.16mm or more Insulating coating material: PVC (heat-resistant)	
	Connector for I/O	Sensor connector (e-CON). Applicable connector plugs are sold separately. ＊1 (applicable wire size: 0.08 to 0.5mm^2, depending on the connector plug)	
Accessory		User's manual, Holding fixtures for screw installation	

＊1: Refer to Section 1.6.2 for details.

4 - 37

External connection

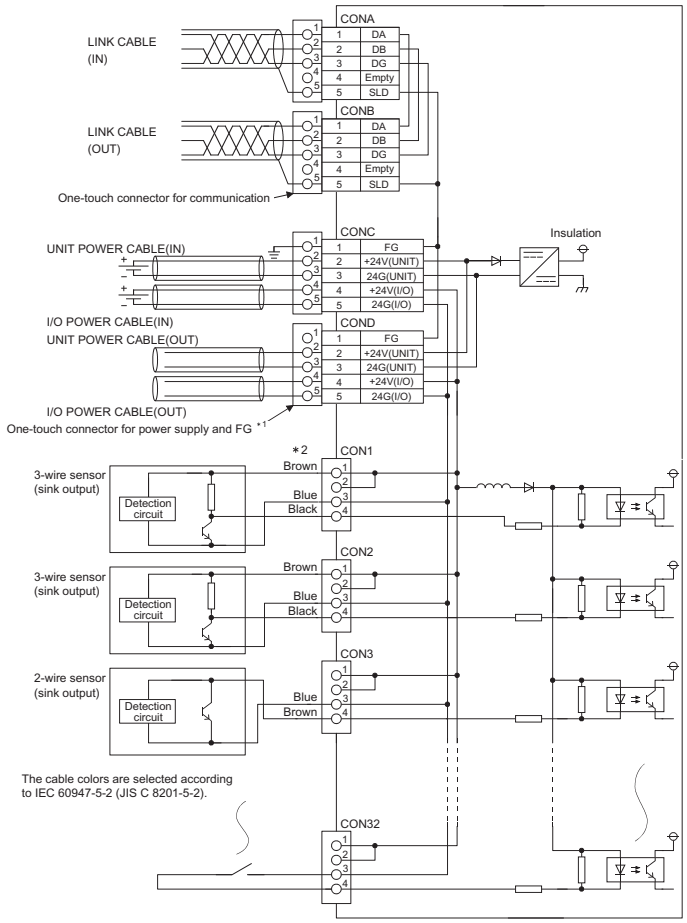

Pin number		Signal name
CON A, B	1	DA
	2	DB
	3	DG
	4	Empty
	5	SLD
CON C, D	1	⏚ (FG)
	2	+24V (UNIT)
	3	24G (UNIT)
	4	+24V (I/O)
	5	24G (I/O)

Pin number		Signal name	Pin number		Signal name	Pin number		Signal name	Pin number		Signal name
CON 1 (X0)	1	+24V	CON 9 (X8)	1	+24V	CON 17 (X10)	1	+24V	CON 25 (X18)	1	+24V
	2	+V		2	+V		2	+V		2	+V
	3	24G		3	24G		3	24G		3	24G
	4	X0		4	X8		4	X10		4	X18
CON 2 (X1)	1	+24V	CON 10 (X9)	1	+24V	CON 18 (X11)	1	+24V	CON 26 (X19)	1	+24V
	2	+V		2	+V		2	+V		2	+V
	3	24G		3	24G		3	24G		3	24G
	4	X1		4	X9		4	X11		4	X19
CON 3 (X2)	1	+24V	CON 11 (XA)	1	+24V	CON 19 (X12)	1	+24V	CON 27 (X1A)	1	+24V
	2	+V		2	+V		2	+V		2	+V
	3	24G		3	24G		3	24G		3	24G
	4	X2		4	XA		4	X12		4	X1A
CON 4 (X3)	1	+24V	CON 12 (XB)	1	+24V	CON 20 (X13)	1	+24V	CON 28 (X1B)	1	+24V
	2	+V		2	+V		2	+V		2	+V
	3	24G		3	24G		3	24G		3	24G
	4	X3		4	XB		4	X13		4	X1B
CON 5 (X4)	1	+24V	CON 13 (XC)	1	+24V	CON 21 (X14)	1	+24V	CON 29 (X1C)	1	+24V
	2	+V		2	+V		2	+V		2	+V
	3	24G		3	24G		3	24G		3	24G
	4	X4		4	XC		4	X14		4	X1C
CON 6 (X5)	1	+24V	CON 14 (XD)	1	+24V	CON 22 (X15)	1	+24V	CON 30 (X1D)	1	+24V
	2	+V		2	+V		2	+V		2	+V
	3	24G		3	24G		3	24G		3	24G
	4	X5		4	XD		4	X15		4	X1D
CON 7 (X6)	1	+24V	CON 15 (XE)	1	+24V	CON 23 (X16)	1	+24V	CON 31 (X1E)	1	+24V
	2	+V		2	+V		2	+V		2	+V
	3	24G		3	24G		3	24G		3	24G
	4	X6		4	XE		4	X16		4	X1E
CON 8 (X7)	1	+24V	CON 16 (XF)	1	+24V	CON 24 (X17)	1	+24V	CON 32 (X1F)	1	+24V
	2	+V		2	+V		2	+V		2	+V
	3	24G		3	24G		3	24G		3	24G
	4	X7		4	XF		4	X17		4	X1F

* 1: Attach an unwired connector plug to an unused one-touch connector for power supply and FG.
* 2: Wiring the sensor connector (e-CON) incorrectly may cause malfunction or failure due to short circuit of the power supply.

4 - 38

External connection

<When using online connectors>

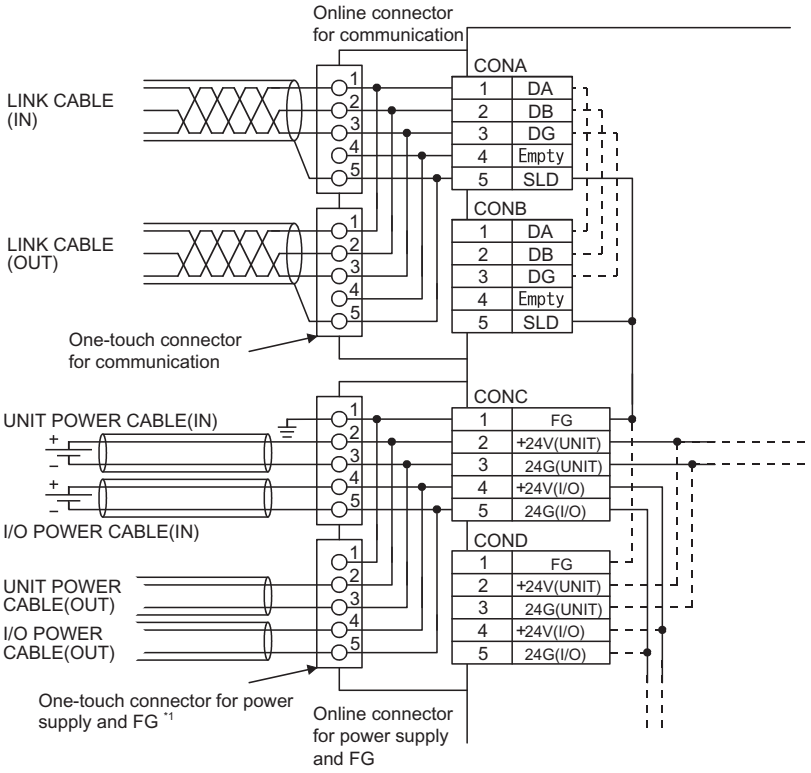

* 1: Attach an unwired connector plug to an unused one-touch connector for power supply and FG.

Pin layout

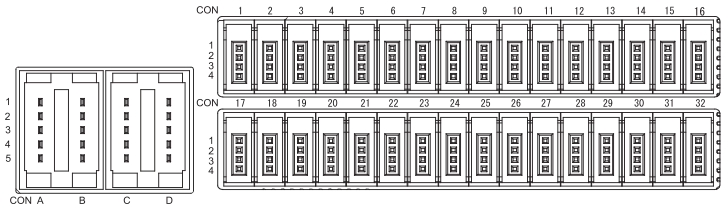

Viewed from the front of the module

4 - 39

AbN
automation

4.3.4 AJ65VBTCE3-16DE 24VDC input module (negative common (source type))

Item \ Type		DC input module	
		AJ65VBTCE3-16DE	Appearance
Number of input points		16 points	
Isolation method		Photocoupler	
Rated input voltage		24VDC (ripple ratio: within 5%)	
Rated input current		Approx. 5mA	
Operating voltage range		19.2 to 26.4VDC	
Max. number of simultaneous input points		100% or 62.5% (Refer to Section1.3.)	
ON voltage/ON current		14VDC or higher/3.5mA or higher	
OFF voltage/OFF current		6VDC or lower/1.7mA or lower	
Input resistance		Approx. 4.7kΩ	
Response time	OFF→ON	1.5ms or less (at 24VDC)	
	ON→OFF	1.5ms or less (at 24VDC)	
Wiring method for common		16 points/common (3-wire, sensor connector (e-CON) type)	
Input type		Negative common (source type)	
Supply current for connected device		1.0A or lower/common	
Number of occupied stations		32-point assignment/station (16 points used)	
Module power supply	Voltage	24VDC (ripple ratio: within 5%) (allowable voltage range: 20.4 to 26.4VDC)	
	Current	35mA or lower (at 24VDC and all points ON)	
Noise immunity		Noise voltage 500Vp-p, noise width 1μs, noise frequency 25 to 60Hz (DC type noise simulator condition)	
Withstand voltage		500VAC for 1 minute between all DC external terminals and ground	
Insulation resistance		10MΩ or higher between all DC external terminals and ground (500VDC insulation resistance tester)	
Protection degree		IP1XB	
Weight		0.11kg	
External connection system	Communication part	One-touch connector for communication [Transmission circuit] 5-pin IDC plug is sold separately: A6CON-L5P <Optional> Online connector for communication: A6CON-LJ5P	
	Power supply part	One-touch connector for power supply and FG [Module power supply, I/O power supply, FG] 5-pin IDC plug is sold separately: A6CON-PW5P, A6CON-PW5P-SOD <Optional> Online connector for power supply: A6CON-PWJ5P	
	I/O part	Sensor connector (e-CON) [I/O signals] 4-pin IDC plug is sold separately. ＊1	
Applicable DIN rail		TH35-7.5Fe, TH35-7.5Al (compliant with IEC 60715 and JIS C 2812)	
Applicable wire size	Connector for communication	Applicable cable: FANC-110SBH, FA-CBL200PSBH, CS-110	
	Connector for power supply and FG	0.66 to 0.98mm^2 (18 AWG) [ϕ2.2 to 3.0mm (A6CON-PW5P), ϕ2.0 to 2.3mm (A6CON-PW5P-SOD)] Wire diameter: 0.16mm or more Insulating coating material: PVC (heat-resistant)	
	Connector for I/O	Sensor connector (e-CON). Applicable connector plugs are sold separately. ＊1 (applicable wire size: 0.08 to 0.5mm^2, depending on the connector plug)	
Accessory		User's manual, Holding fixtures for screw installation	

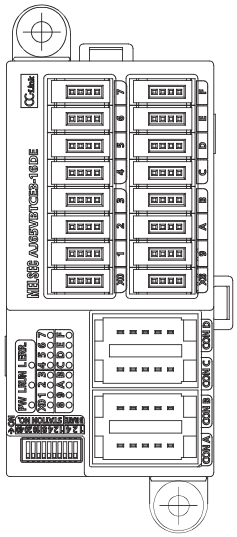

＊1: Refer to Section 1.6.2 for details.

4 - 40

External connection

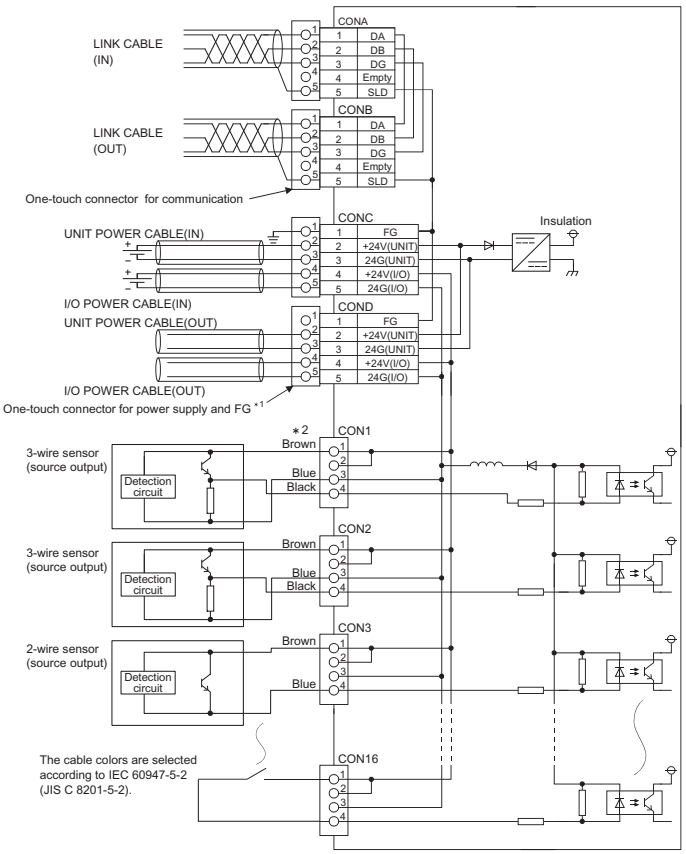

Pin number		Signal name
CON A, B	1	DA
	2	DB
	3	DG
	4	Empty
	5	SLD
CON C, D	1	⏚ (FG)
	2	+24V (UNIT)
	3	24G (UNIT)
	4	+24V (I/O)
	5	24G (I/O)

Pin number		Signal name	Pin number		Signal name	Pin number		Signal name	Pin number		Signal name
CON 1 (X0)	1	+24V	CON 5 (X4)	1	+24V	CON 9 (X8)	1	+24V	CON 13 (XC)	1	+24V
	2	+V		2	+V		2	+V		2	+V
	3	24G		3	24G		3	24G		3	24G
	4	X0		4	X4		4	X8		4	XC
CON 2 (X1)	1	+24V	CON 6 (X5)	1	+24V	CON 10 (X9)	1	+24V	CON 14 (XD)	1	+24V
	2	+V		2	+V		2	+V		2	+V
	3	24G		3	24G		3	24G		3	24G
	4	X1		4	X5		4	X9		4	XD
CON 3 (X2)	1	+24V	CON 7 (X6)	1	+24V	CON 11 (XA)	1	+24V	CON 15 (XE)	1	+24V
	2	+V		2	+V		2	+V		2	+V
	3	24G		3	24G		3	24G		3	24G
	4	X2		4	X6		4	XA		4	XE
CON 4 (X3)	1	+24V	CON 8 (X7)	1	+24V	CON 12 (XB)	1	+24V	CON 16 (XF)	1	+24V
	2	+V		2	+V		2	+V		2	+V
	3	24G		3	24G		3	24G		3	24G
	4	X3		4	X7		4	XB		4	XF

*1: Attach an unwired connector plug to an unused one-touch connector for power supply and FG.
*2: Wiring the sensor connector (e-CON) incorrectly may cause malfunction or failure due to short circuit of the power supply.

Pin layout

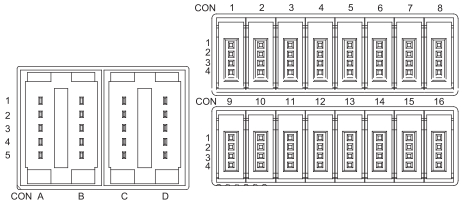

Viewed from the front of the module

4 - 41

AbN
automation

External connection

<When using online connectors>

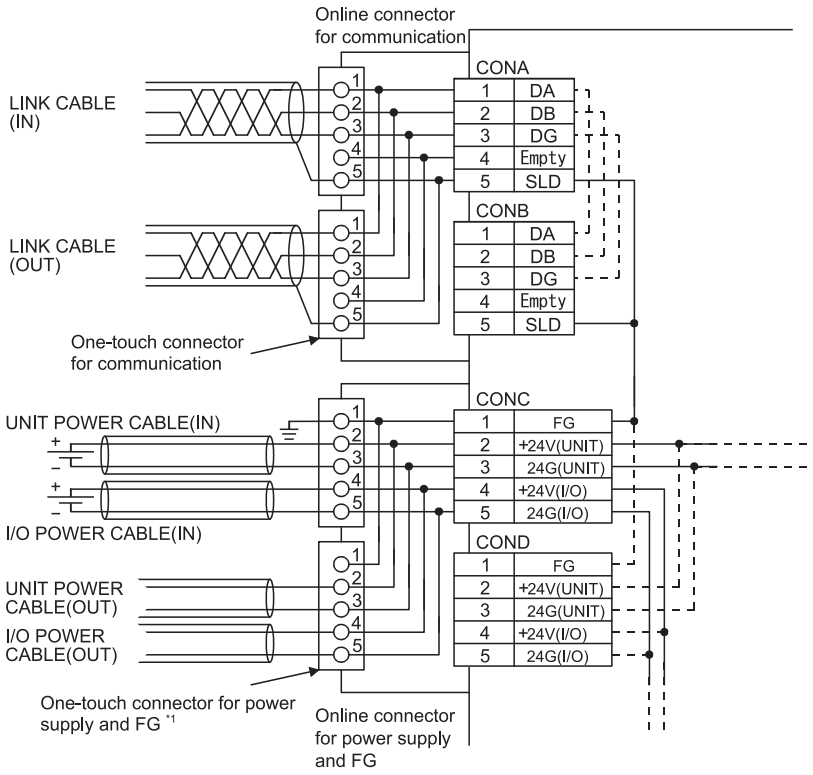

* 1: Attach an unwired connector plug to an unused one-touch connector for power supply and FG.

4 - 42

4.3.5 AJ65VBTCE3-32DE 24VDC input module (negative common (source type))

Specification \ Type		DC input module	
		AJ65VBTCE3-32DE	Appearance
Number of input points		32 points	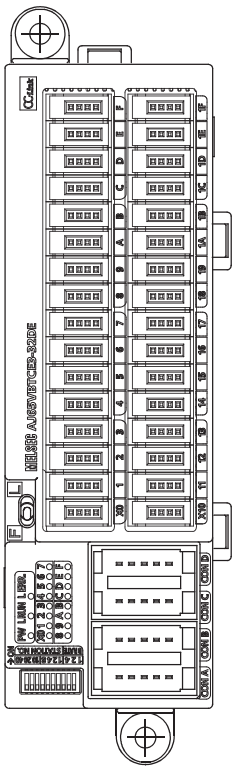
Isolation method		Photocoupler	
Rated input voltage		24VDC (ripple ratio: within 5%)	
Rated input current		Approx. 5mA	
Operating voltage range		19.2 to 26.4VDC	
Max. number of simultaneous input points		100% or 75% (Refer to Secion1.3.)	
ON voltage/ON current		14VDC or higher/3.5mA or higher	
OFF voltage/OFF current		6VDC or lower/1.7mA or lower	
Input resistance		Approx. 4.7kΩ	
Response time	OFF→ON	1.5ms or less (at 24VDC)	
	ON→OFF	1.5ms or less (at 24VDC)	
Wiring method for common		32 points/common (3-wire, sensor connector (e-CON) type)	
Input type		Negative common (source type)	
Supply current for connected device		2.0A or lower/common	
Number of occupied stations		32-point assignment/station (32 points used)	
Module power supply	Voltage	24VDC (ripple ratio: within 5%) (allowable voltage range: 20.4 to 26.4VDC)	
	Current	40mA or lower (at 24VDC and all points ON)	
Noise immunity		Noise voltage 500Vp-p, noise width 1μs, noise frequency 25 to 60Hz (DC type noise simulator condition)	
Withstand voltage		500VAC for 1 minute between all DC external terminals and ground	
Insulation resistance		10MΩ or higher between all DC external terminals and ground (500VDC insulation resistance tester)	
Protection degree		IP1XB	
Weight		0.16kg	
External connection system	Communication part	One-touch connector for communication [Transmission circuit] 5-pin IDC plug is sold separately: A6CON-L5P <Optional> Online connector for communication: A6CON-LJ5P	
	Power supply part	One-touch connector for power supply and FG [Module power supply, I/O power supply, FG] 5-pin IDC plug is sold separately: A6CON-PW5P, A6CON-PW5P-SOD <Optional> Online connector for power supply: A6CON-PWJ5P	
	I/O part	Sensor connector (e-CON) [I/O signals] 4-pin IDC plug is sold separately. ∗1	
Applicable DIN rail		TH35-7.5Fe, TH35-7.5Al (compliant with IEC 60715 and JIS C 2812)	
Applicable wire size	Connector for communication	Applicable cable: FANC-110SBH, FA-CBL200PSBH, CS-110	
	Connector for power supply and FG	0.66 to 0.98mm^2 (18 AWG) [ϕ2.2 to 3.0mm (A6CON-PW5P), ϕ2.0 to 2.3mm (A6CON-PW5P-SOD)] Wire diameter: 0.16mm or more Insulating coating material: PVC (heat-resistant)	
	Connector for I/O	Sensor connector (e-CON). Applicable connector plugs are sold separately. ∗1 (applicable wire size: 0.08 to 0.5mm^2, depending on the connector plug)	
Accessory		User's manual, Holding fixtures for screw installation	

∗1: Refer to Section 1.6.2 for details.

4 - 43

AbN
automation

External connection

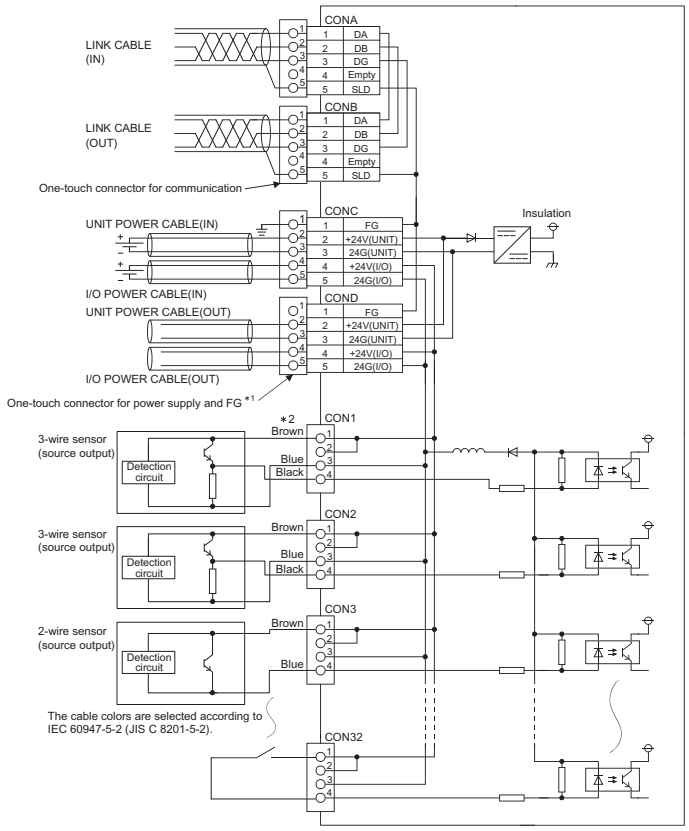

Pin number		Signal name
CON A, B	1	DA
	2	DB
	3	DG
	4	Empty
	5	SLD
CON C, D	1	⏚ (FG)
	2	+24V (UNIT)
	3	24G (UNIT)
	4	+24V (I/O)
	5	24G (I/O)

Pin number		Signal name	Pin number		Signal name	Pin number		Signal name	Pin number		Signal name
CON 1 (X0)	1	+24V	CON 9 (X8)	1	+24V	CON 17 (X10)	1	+24V	CON 25 (X18)	1	+24V
	2	+V		2	+V		2	+V		2	+V
	3	24G		3	24G		3	24G		3	24G
	4	X0		4	X8		4	X10		4	X18
CON 2 (X1)	1	+24V	CON 10 (X9)	1	+24V	CON 18 (X11)	1	+24V	CON 26 (X19)	1	+24V
	2	+V		2	+V		2	+V		2	+V
	3	24G		3	24G		3	24G		3	24G
	4	X1		4	X9		4	X11		4	X19
CON 3 (X2)	1	+24V	CON 11 (XA)	1	+24V	CON 19 (X12)	1	+24V	CON 27 (X1A)	1	+24V
	2	+V		2	+V		2	+V		2	+V
	3	24G		3	24G		3	24G		3	24G
	4	X2		4	XA		4	X12		4	X1A
CON 4 (X3)	1	+24V	CON 12 (XB)	1	+24V	CON 20 (X13)	1	+24V	CON 28 (X1B)	1	+24V
	2	+V		2	+V		2	+V		2	+V
	3	24G		3	24G		3	24G		3	24G
	4	X3		4	XB		4	X13		4	X1B
CON 5 (X4)	1	+24V	CON 13 (XC)	1	+24V	CON 21 (X14)	1	+24V	CON 29 (X1C)	1	+24V
	2	+V		2	+V		2	+V		2	+V
	3	24G		3	24G		3	24G		3	24G
	4	X4		4	XC		4	X14		4	X1C
CON 6 (X5)	1	+24V	CON 14 (XD)	1	+24V	CON 22 (X15)	1	+24V	CON 30 (X1D)	1	+24V
	2	+V		2	+V		2	+V		2	+V
	3	24G		3	24G		3	24G		3	24G
	4	X5		4	XD		4	X15		4	X1D
CON 7 (X6)	1	+24V	CON 15 (XE)	1	+24V	CON 23 (X16)	1	+24V	CON 31 (X1E)	1	+24V
	2	+V		2	+V		2	+V		2	+V
	3	24G		3	24G		3	24G		3	24G
	4	X6		4	XE		4	X16		4	X1E
CON 8 (X7)	1	+24V	CON 16 (XF)	1	+24V	CON 24 (X17)	1	+24V	CON 32 (X1F)	1	+24V
	2	+V		2	+V		2	+V		2	+V
	3	24G		3	24G		3	24G		3	24G
	4	X7		4	XF		4	X17		4	X1F

* 1: Attach an unwired connector plug to an unused one-touch connector for power supply and FG.
* 2: Wiring the sensor connector (e-CON) incorrectly may cause malfunction or failure due to short circuit of the power supply.

4 - 44

External connection

<When using online connectors>

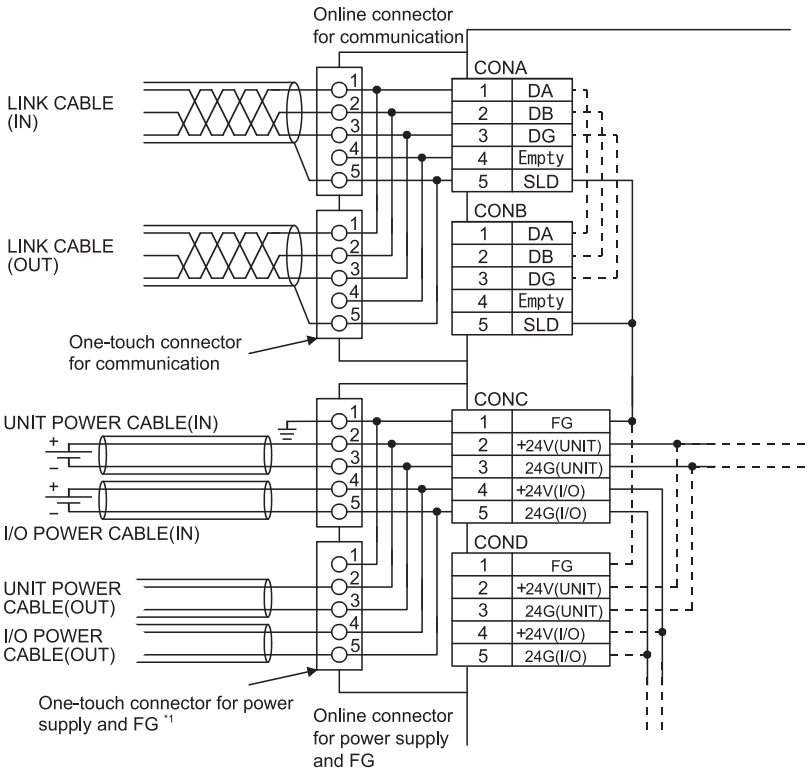

* 1: Attach an unwired connector plug to an unused one-touch connector for power supply and FG.

Pin layout

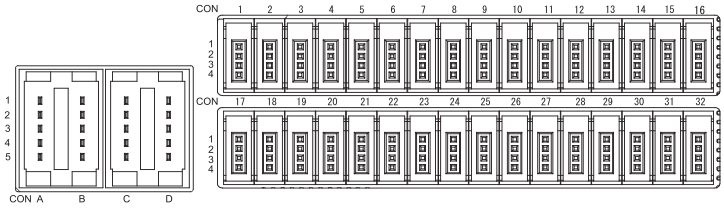

Viewed from the front of the module

4 - 45

AbN
automation

4.4 One-Touch Connector Type Input Module

4.4.1 AJ65VBTCU3-8D1 24VDC input module (positive common (sink type))

Item \ Type		DC input module	
		AJ65VBTCU3-8D1	Appearance
Number of input points		8 points	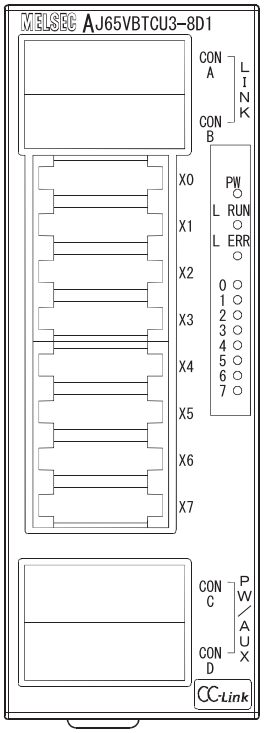
Isolation method		Photocoupler	
Rated input voltage		24VDC (ripple ratio: within 5%)	
Rated input current		Approx. 5mA	
Operating voltage range		19.2 to 26.4VDC	
Max. number of simultaneous input points		100%	
ON voltage/ON current		15VDC or higher/3mA or higher	
OFF voltage/OFF current		3VDC or lower/0.5mA or lower	
Input resistance		Approx. 4.7kΩ	
Response time	OFF→ON	0.2ms or less (at 24VDC)	
	ON→OFF	0.2ms or less (at 24VDC)	
Wiring method for common		8 points/common (3-wire, one-touch connector type)	
Input type		Positive common (sink type)	
Supply current for connected device		1.0A or lower/common	
Number of occupied stations		32-point assignment/station (8 points used)	
Module power supply	Voltage	24VDC (ripple ratio: within 5%) (allowable voltage range: 20.4 to 26.4VDC)	
	Current	35mA or lower (at 24VDC and all points ON)	
Noise immunity		Noise voltage 500Vp-p, noise width 1μs, noise frequency 25 to 60Hz (DC type noise simulator condition)	
Withstand voltage		500VAC for 1 minute between all DC external terminals and ground	
Insulation resistance		10MΩ or higher between all DC external terminals and ground (500VDC insulation resistance tester)	
Protection degree		IP1XB	
Weight		0.15kg	
External connection system	Communication part	One-touch connector for communication [Transmission circuit] 5-pin IDC plug is sold separately. <Optional> Online connector for communication: A6CON-LJ5P	
	Power supply part	One-touch connector for power supply and FG [Module power supply, I/O power supply, FG] 5-pin IDC plug is sold separately: A6CON-PW5P, A6CON-PW5P-SOD <Optional> Online connector for power supply: A6CON-PWJ5P	
	I/O part	One-touch connector for I/O 4-pin IDC plug is sold separately.	
Applicable DIN rail		TH35-7.5Fe, TH35-7.5Al (compliant with IEC 60715 and JIS C 2812)	
Applicable wire size	Connector for communication	Applicable cable: FANC-110SBH, FA-CBL200PSBH, CS-110	
	Connector for power supply and FG	0.66 to 0.98mm^2 (18 AWG) [ϕ2.2 to 3.0mm (A6CON-PW5P), ϕ2.0 to 2.3mm (A6CON-PW5P-SOD)] Wire diameter: 0.16mm or more Insulating coating material: PVC (heat-resistant)	
	Connector for I/O	ϕ1.0 to 1.4 (A6CON-P214), ϕ1.4 to 2.0 (A6CON-P220) [Applicable wire size: 0.14 to 0.2mm^2] ϕ1.0 to 1.4 (A6CON-P514), ϕ1.4 to 2.0 (A6CON-P520) [Applicable wire size: 0.3 to 0.5mm^2]	
Accessory		User's manual	

4 - 46

External connection

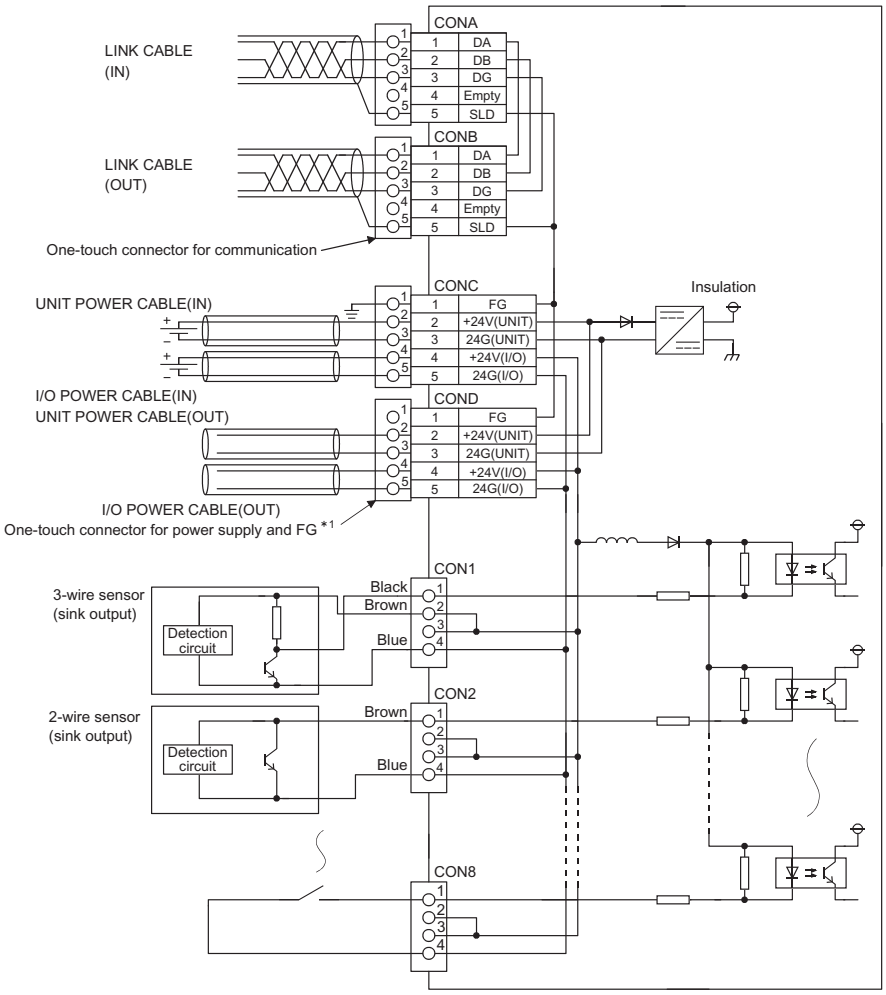

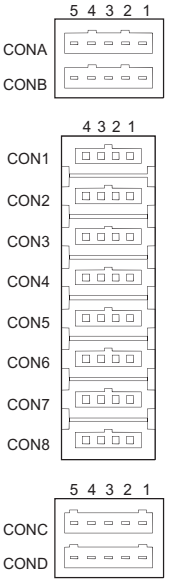

Viewed from the front of the module

Pin layout	Pin number		Signal name
	CON A, B	1	DA
		2	DB
		3	DG
		4	Empty
		5	SLD
	CON1	1	X0
		2	+V
		3	+24V
		4	24G
	CON2	1	X1
		2	+V
		3	+24V
		4	24G
	CON3	1	X2
		2	+V
		3	+24V
		4	24G
	CON4	1	X3
		2	+V
		3	+24V
		4	24G
	CON5	1	X4
		2	+V
		3	+24V
		4	24G
	CON6	1	X5
		2	+V
		3	+24V
		4	24G
	CON7	1	X6
		2	+V
		3	+24V
		4	24G
	CON8	1	X7
		2	+V
		3	+24V
		4	24G
	CON C, D	1	⏚ (FG)
		2	+24V (UNIT)
		3	24G (UNIT)
		4	+24V (I/O)
		5	24G (I/O)

*1: Attach an unwired connector plug to an unused one-touch connector for power supply and FG.

4 - 47

AbN
automation

External connection

<When using online connectors>

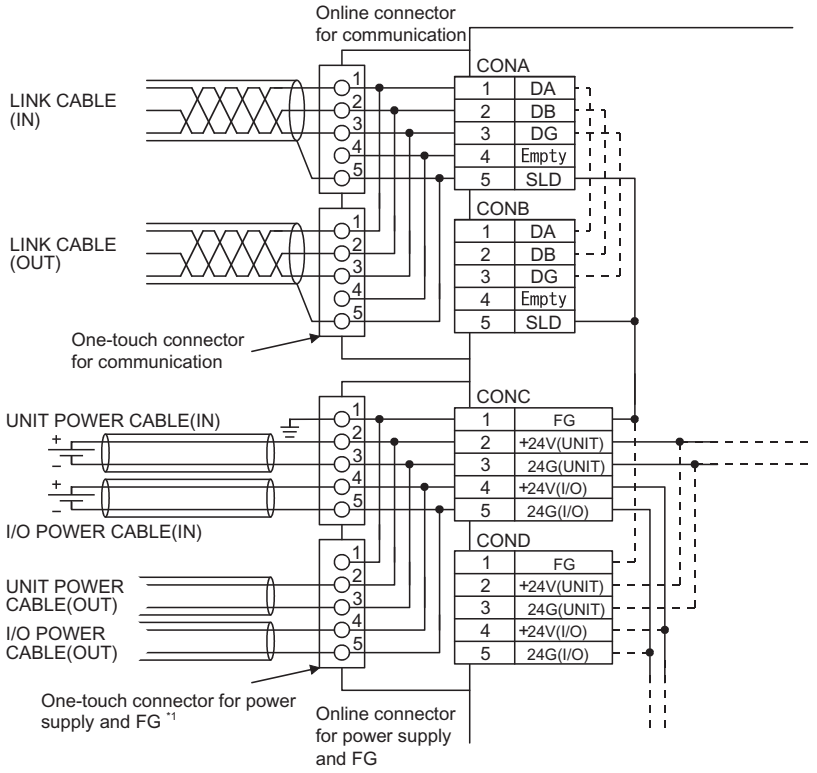

*1: Attach an unwired connector plug to an unused one-touch connector for power supply and FG.

4 - 48

4.4.2 AJ65SBTC4-16D 24VDC input module (positive common (sink), negative common (source) loading)

Item \ Type			DC input module: AJ65SBTC4-16D	Appearance
Number of input points			16 points	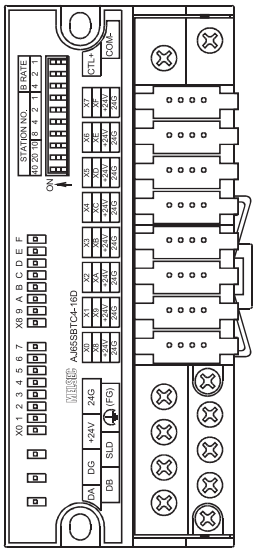
Isolation method			Photocoupler	
Rated input voltage			24VDC (ripple ratio: within 5%)	
Rated input current			Approx. 5mA	
Operating voltage range			19.2 to 26.4VDC	
Max. number of simultaneous input points			100%	
ON voltage/ON current			14VDC or higher/3.5mA or higher	
OFF voltage/OFF current			6VDC or lower/1.7mA or lower	
Input resistance			Approx. 4.7kΩ	
Response time		OFF→ON	1.5ms or less (at 24VDC)	
		ON→OFF	1.5ms or less (at 24VDC)	
Wiring method for common			16 points/common (4-wire, one-touch connector type)	
Input type			Positive/negative common shared type (sink/source shared type) (Selected using the switch.)	
Number of occupied stations			32-point assignment/station (16 points used)	
Module power supply		Voltage	24VDC (ripple ratio: within 5%) (allowable voltage range: 20.4 to 26.4VDC)	
		Current	35mA or lower (at 24VDC and all points ON)	
Noise immunity			Noise voltage 500Vp-p, noise width 1μs, noise frequency 25 to 60Hz (DC type noise simulator condition)	
Withstand voltage			500VAC for 1 minute between all DC external terminals and ground	
Insulation resistance			10MΩ or higher between all DC external terminals and ground (500VDC insulation resistance tester)	
Protection degree			IP2X	
Weight			0.15kg	
External connection system	Communication part, module power supply part		7-point two-piece terminal block [Transmission circuit, module power supply, FG] M3×5.2 screw (tightening torque range: 0.59 to 0.88N•m) Applicable solderless terminal: 2 or less	
	I/O power supply part		2-point direct-mount terminal block [I/O power supply] M3×5.2 screw (tightening torque range: 0.59 to 0.88N•m) Applicable solderless terminal: 2 or less	
	I/O part		Dedicated one-touch connector [I/O signals] 4-pin IDC plug is sold separately.	
Module mounting screw			M4 screw with plain washer finished round (tightening torque range: 0.78 to 1.08N•m) Mountable with a DIN rail in 6 orientations	
Applicable DIN rail			TH35-7.5Fe, TH35-7.5Al (compliant with IEC 60715 and JIS C 2812)	
Applicable wire size	Communication part, module power supply part	Applicable solderless terminal	• RAV1.25-3 (compliant with JIS C 2805) [Applicable wire size: 0.3 to 1.25mm^2] • V2-MS3, RAP2-3SL, TGV2-3N [Applicable wire size: 1.25 to 2.0mm^2 (16 to 14 AWG) stranded wire]	
	I/O power supply part			
	I/O part		ϕ1.0 to 1.4 (A6CON-P214), ϕ1.4 to 2.0 (A6CON-P220) [Applicable wire size: 0.14 to 0.2mm^2] ϕ1.0 to 1.4 (A6CON-P514), ϕ1.4 to 2.0 (A6CON-P520) [Applicable wire size: 0.3 to 0.5mm^2]	
Accessory			User's manual	

4 - 49

AbN
automation

External connection (positive common (sink input))

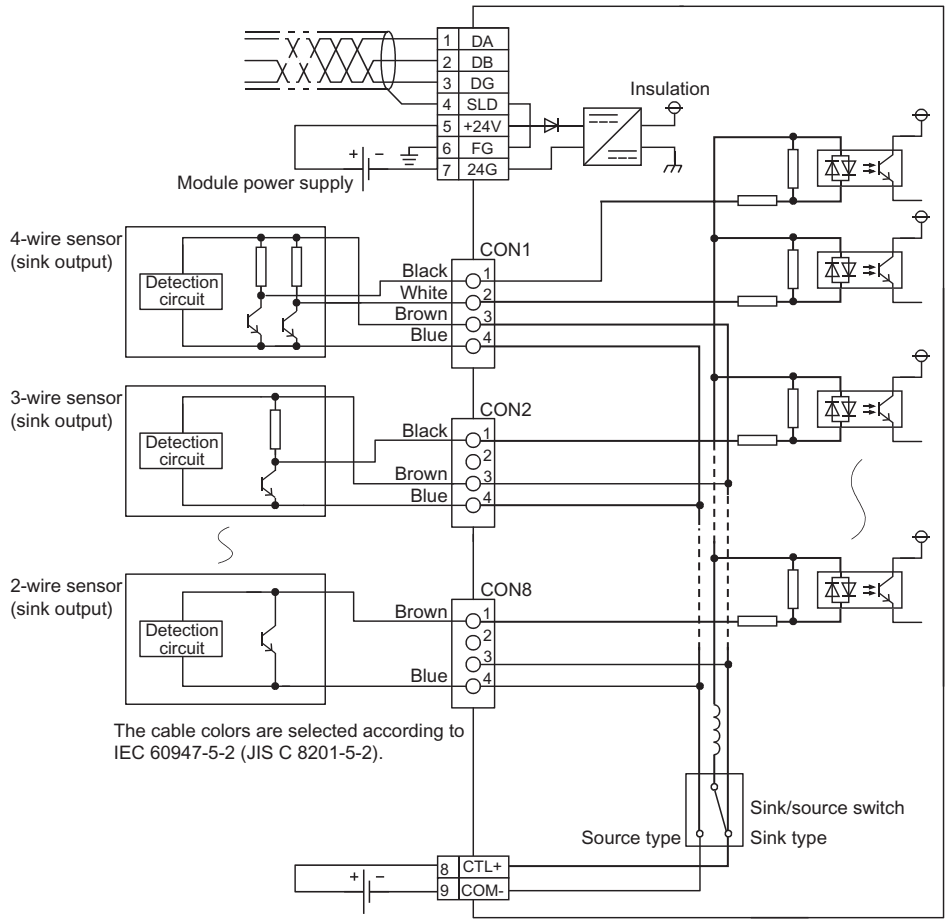

Pin layout

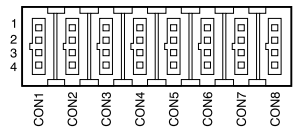

Viewed from the front of the module

Terminal number	Signal name
TB1	DA
TB2	DB
TB3	DG
TB4	SLD
TB5	+24V
TB6	⏚(FG)
TB7	24G

Pin number		Signal name
CON1	1	X0
	2	X8
	3	+24V
	4	24G
CON2	1	X1
	2	X9
	3	+24V
	4	24G
CON3	1	X2
	2	XA
	3	+24V
	4	24G
CON4	1	X3
	2	XB
	3	+24
	4	24G

Pin number		Signal name
CON5	1	X4
	2	XC
	3	+24V
	4	24G
CON6	1	X5
	2	XD
	3	+24V
	4	24G
CON7	1	X6
	2	XE
	3	+24V
	4	24G
CON8	1	X7
	2	XF
	3	+24V
	4	24G

Terminal number	Signal name
TB8	CTL+
TB9	COM-

4 - 50

External connection (negative common (source input))

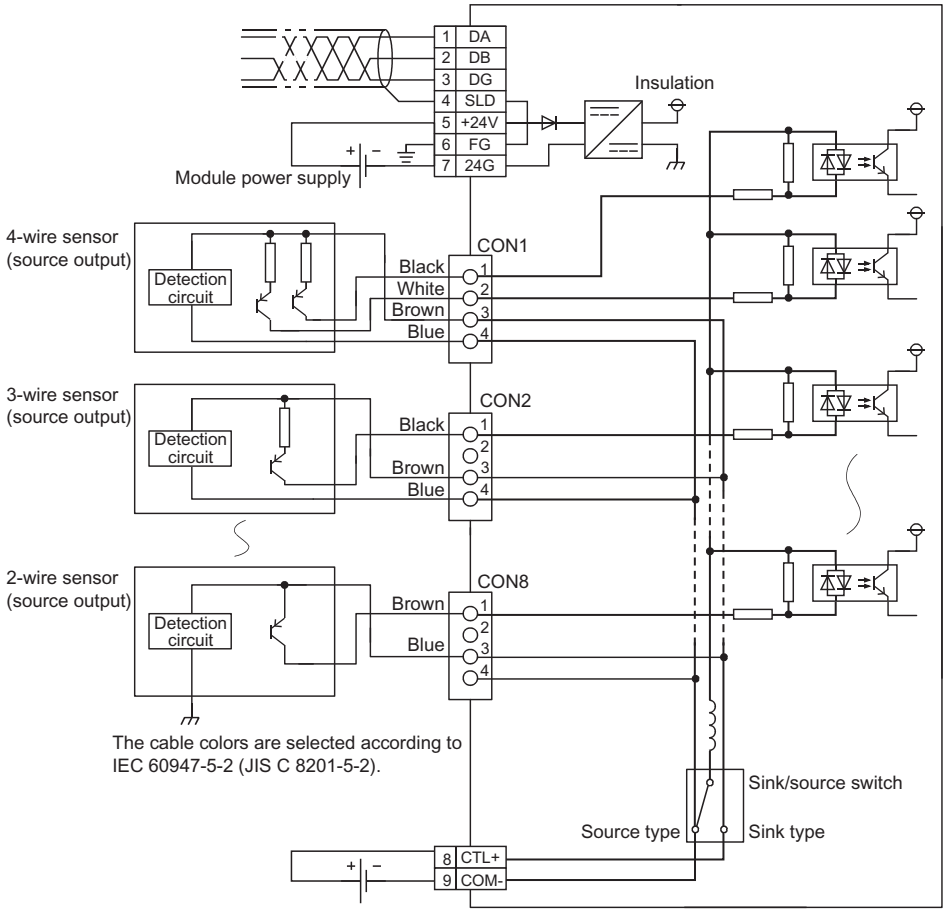

Pin layout

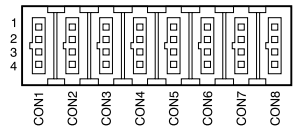

Viewed from the front of the module

Terminal number	Signal name
TB1	DA
TB2	DB
TB3	DG
TB4	SLD
TB5	+24V
TB6	⏚(FG)
TB7	24G

Pin number		Signal name
CON1	1	X0
	2	X8
	3	+24V
	4	24G
CON2	1	X1
	2	X9
	3	+24V
	4	24G
CON3	1	X2
	2	XA
	3	+24V
	4	24G
CON4	1	X3
	2	XB
	3	+24
	4	24G

Pin number		Signal name
CON5	1	X4
	2	XC
	3	+24V
	4	24G
CON6	1	X5
	2	XD
	3	+24V
	4	24G
CON7	1	X6
	2	XE
	3	+24V
	4	24G
CON8	1	X7
	2	XF
	3	+24V
	4	24G

Terminal number	Signal name
TB8	CTL+
TB9	COM-

4 - 51

AbN
automation

4.4.3 AJ65SBTC4-16DN 24VDC input module (positive common (sink type))

Specification \ Type			DC input module AJ65SBTC4-16DN	Appearance
Number of input points			16 points	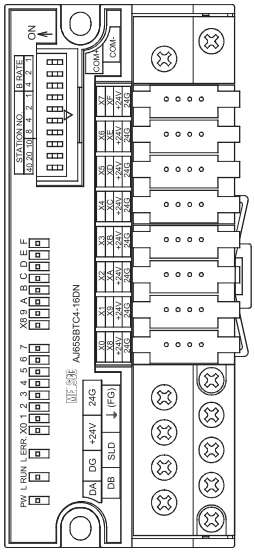
Isolation method			Photocoupler	
Rated input voltage			24VDC (ripple ratio: within 5%)	
Rated input current			Approx. 5mA	
Operating voltage range			19.2 to 26.4VDC	
Max. number of simultaneous input points			100%	
ON voltage/ON current			14VDC or higher/3.5mA or higher	
OFF voltage/OFF current			6VDC or lower/1.7mA or lower	
Input resistance			Approx. 4.7kΩ	
Response time	OFF→ON		1.5ms or less (at 24VDC)	
	ON→OFF		1.5ms or less (at 24VDC)	
Wiring method for common			16 points/common (4-wire, one-touch connector type)	
Input type			Positive common (sink type)	
Supply current for connected device			1.0A or lower/common	
Number of occupied stations			32-point assignment/station (16 points used)	
Module power supply	Voltage		24VDC (ripple ratio: within 5%) (allowable voltage range: 20.4 to 26.4VDC)	
	Current		35mA or lower (at 24VDC and all points ON)	
Noise immunity			Noise voltage 500Vp-p, noise width 1μs, noise frequency 25 to 60Hz (DC type noise simulator condition)	
Withstand voltage			500VAC for 1 minute between all DC external terminals and ground	
Insulation resistance			10MΩ or higher between all DC external terminals and ground (500VDC insulation resistance tester)	
Protection degree			IP2X	
Weight			0.15kg	
External connection system	Communication part, module power supply part		7-point two-piece terminal block [Transmission circuit, module power supply, FG] M3×5.2 screw (tightening torque range:0.59 to 0.88N•m) Applicable solderless terminal: 2 or less	
	I/O power supply part		2-point direct-mount terminal block [I/O power supply] M3×5.2 screw (tightening torque range:0.59 to 0.88N•m) Applicable solderless terminal: 2 or less	
	I/O part		Dedicated one-touch connector [I/O signals] 4-pin IDC plug is sold separately.	
Module mounting screw			M4 screw with plain washer finished round (tightening torque range: 0.78 to 1.08N•m) Mountable with a DIN rail in 6 orientations	
Applicable DIN rail			TH35-7.5Fe, TH35-7.5Al (compliant with IEC 60715 and JIS C 2812)	
Applicable wire size	Communication part, module power supply part	Applicable solderless terminal	• RAV1.25-3 (compliant with JIS C 2805) [Applicable wire size: 0.3 to 1.25mm^2 (22 to 16 AWG) stranded wire] • V2-MS3, RAP2-3SL, TGV2-3N [Applicable wire size: 1.25 to 2.0mm^2 (16 to 14 AWG) stranded wire]	
	I/O power supply part			
	I/O part		ϕ1.0 to 1.4 (A6CON-P214), ϕ1.4 to 2.0 (A6CON-P220) [Applicable wire size: 0.14 to 0.2mm^2 (26 to 24 AWG) stranded wire] ϕ1.0 to 1.4 (A6CON-P514), ϕ1.4 to 2.0 (A6CON-P520) [Applicable wire size: 0.3 to 0.5 mm^2 (22 to 20 AWG) stranded wire]	
Wire	Material		Copper	
	Temperature rating		75°C or more	
Accessory			User's manual	

* For applicable solderless terminals connected to the terminal block, refer to the table above. Use applicable wires for the solderless terminals and fix them with an appropriate tightening torque. Use UL listed solderless terminals and, for crimping, use a tool recommended by their manufacturer.

4 - 52

External connection

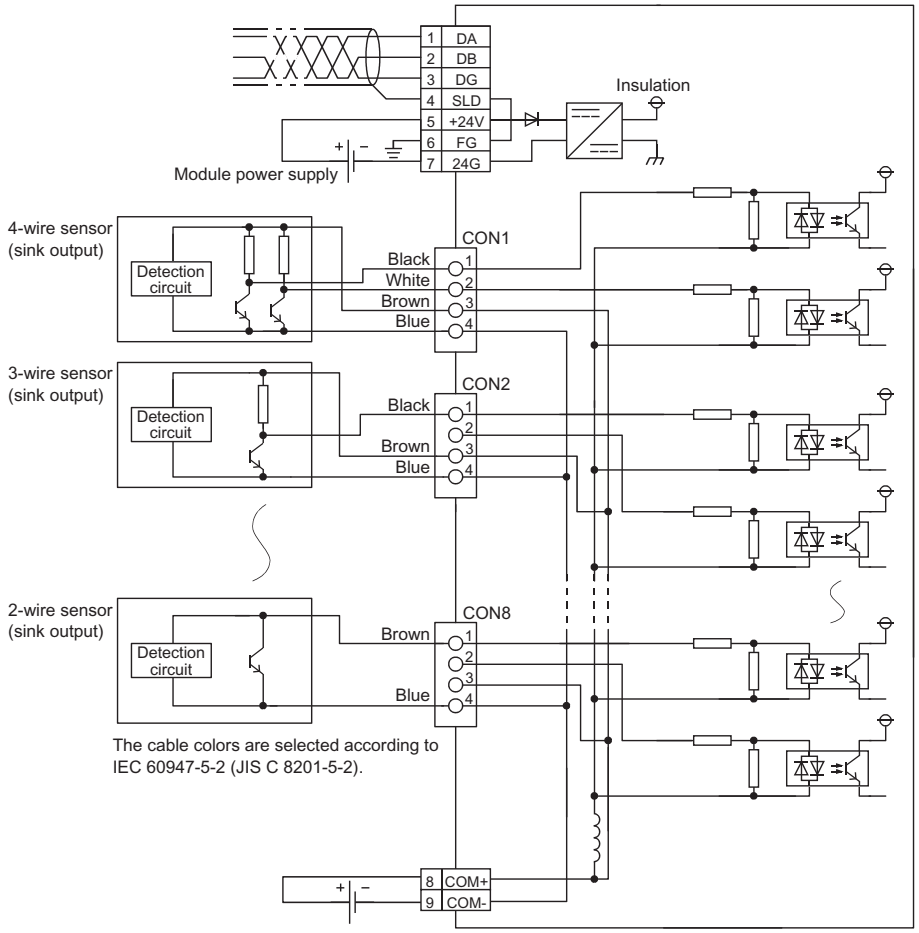

Terminal number	Signal name
TB1	DA
TB2	DB
TB3	DG
TB4	SLD
TB5	+24V
TB6	⏚ (FG)
TB7	24G

Pin number		Signal name
CON1	1	X0
	2	X8
	3	+24V
	4	24G
CON2	1	X1
	2	X9
	3	+24V
	4	24G
CON3	1	X2
	2	XA
	3	+24V
	4	24G
CON4	1	X3
	2	XB
	3	+24
	4	24G
CON5	1	X4
	2	XC
	3	+24V
	4	24G
CON6	1	X5
	2	XD
	3	+24V
	4	24G
CON7	1	X6
	2	XE
	3	+24V
	4	24G
CON8	1	X7
	2	XF
	3	+24V
	4	24G

Terminal number	Signal name
TB8	COM+
TB9	COM-

Pin layout

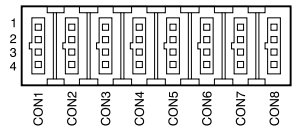

Viewed from the front of the module

4 - 53

AbN
automation

4.4.4 AJ65SBTC4-16DE 24VDC input module (negative common (source type))

Specification \ Type			DC input module AJ65SBTC4-16DE	Appearance
Number of input points			16 points	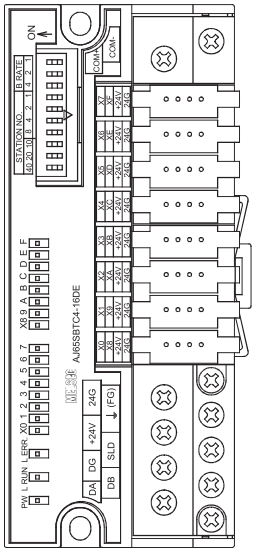
Isolation method			Photocoupler	
Rated input voltage			24VDC (ripple ratio: within 5%)	
Rated input current			Approx. 5mA	
Operating voltage range			19.2 to 26.4VDC	
Max. number of simultaneous input points			100%	
ON voltage/ON current			14VDC or higher/3.5mA or higher	
OFF voltage/OFF current			6VDC or lower/1.7mA or lower	
Input resistance			Approx. 4.7kΩ	
Response time	OFF→ON		1.5ms or less (at 24VDC)	
	ON→OFF		1.5ms or less (at 24VDC)	
Wiring method for common			16 points/common (4-wire, one-touch connector type)	
Input type			Negative common (source type)	
Supply current for connected device			1.0A or lower/common	
Number of occupied stations			32-point assignment/station (16 points used)	
Module power supply	Voltage		24VDC (ripple ratio: within 5%) (allowable voltage range: 20.4 to 26.4VDC)	
	Current		35mA or lower (at 24VDC and all points ON)	
Noise immunity			Noise voltage 500Vp-p, noise width 1μs, noise frequency 25 to 60Hz (DC type noise simulator condition)	
Withstand voltage			500VAC for 1 minute between all DC external terminals and ground	
Insulation resistance			10MΩ or higher between all DC external terminals and ground (500VDC insulation resistance tester)	
Protection degree			IP2X	
Weight			0.15kg	
External connection system	Communication part, module power supply part		7-point two-piece terminal block [Transmission circuit, module power supply, FG] M3×5.2 screw (tightening torque range: 0.59 to 0.88N•m) Applicable solderless terminal: 2 or less	
	I/O power supply part		2-point direct-mount terminal block [I/O power supply] M3×5.2 screw (tightening torque range: 0.59 to 0.88N•m) Applicable solderless terminal: 2 or less	
	I/O part		Dedicated one-touch connector [I/O signals] 4-pin IDC plug is sold separately.	
Module mounting screw			M4 screw with plain washer finished round (tightening torque range: 0.78 to 1.08N•m) Mountable with a DIN rail in 6 orientations	
Applicable DIN rail			TH35-7.5Fe, TH35-7.5Al (compliant with IEC 60715 and JIS C 2812)	
Applicable wire size	Communication part, module power supply part	Applicable solderless terminal	• RAV1.25-3 (compliant with JIS C 2805) [Applicable wire size: 0.3 to 1.25mm^2 (22 to 16 AWG) stranded wire] • V2-MS3, RAP2-3SL, TGV2-3N [Applicable wire size: 1.25 to 2.0mm^2 (16 to 14 AWG) stranded wire]	
	I/O power supply part			
	I/O part		φ1.0 to 1.4 (A6CON-P214), φ1.4 to 2.0 (A6CON-P220) [Applicable wire size: 0.14 to 0.2mm^2 (26 to 24 AWG) stranded wire] φ1.0 to 1.4 (A6CON-P514), φ1.4 to 2.0 (A6CON-P520) [Applicable wire size: 0.3 to 0.5 mm^2 (22 to 20 AWG) stranded wire]	
Wire	Material		Copper	
	Temperature rating		75°C or more	
Accessory			User's manual	

* For applicable solderless terminals connected to the terminal block, refer to the table above. Use applicable wires for the solderless terminals and fix them with an appropriate tightening torque. Use UL listed solderless terminals and, for crimping, use a tool recommended by their manufacturer.

4 - 54

External connection

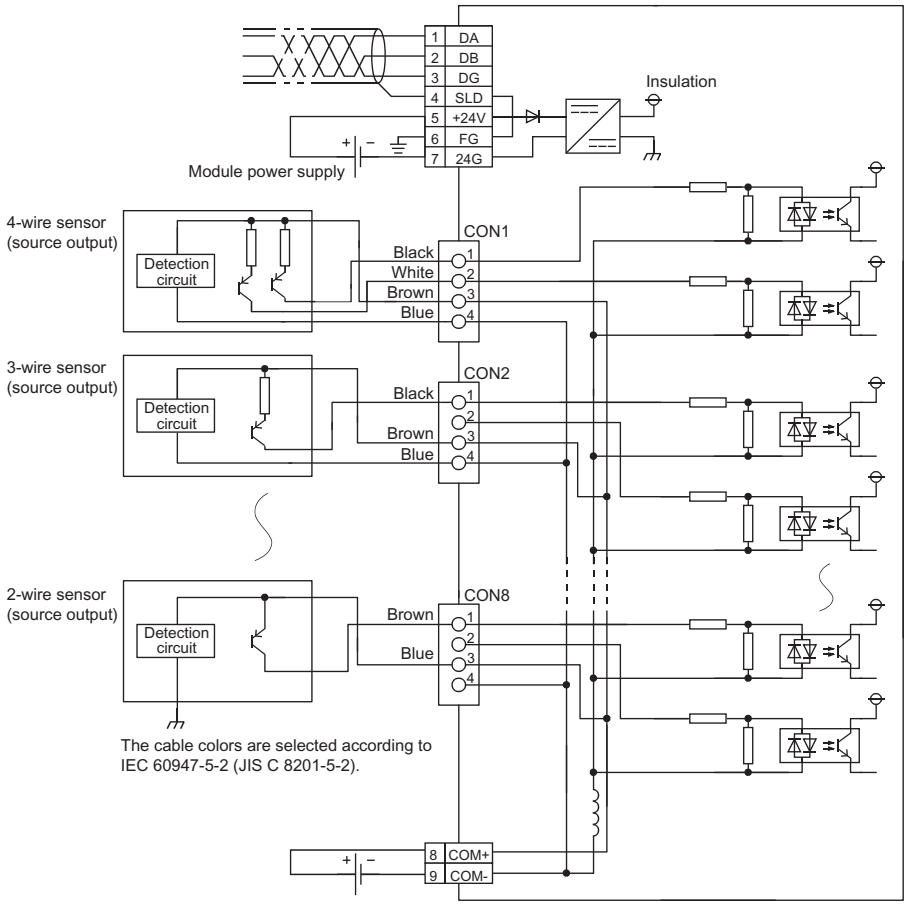

Terminal number	Signal name
TB1	DA
TB2	DB
TB3	DG
TB4	SLD
TB5	+24V
TB6	⏚ (FG)
TB7	24G

Pin number		Signal name
CON1	1	X0
	2	X8
	3	+24V
	4	24G
CON2	1	X1
	2	X9
	3	+24V
	4	24G
CON3	1	X2
	2	XA
	3	+24V
	4	24G
CON4	1	X3
	2	XB
	3	+24
	4	24G
CON5	1	X4
	2	XC
	3	+24V
	4	24G
CON6	1	X5
	2	XD
	3	+24V
	4	24G
CON7	1	X6
	2	XE
	3	+24V
	4	24G
CON8	1	X7
	2	XF
	3	+24V
	4	24G

Terminal number	Signal name
TB8	COM+
TB9	COM-

Pin layout

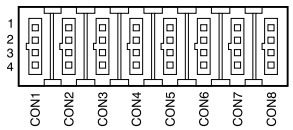

Viewed from the front of the module

AbN
automation

4.4.5 AJ65VBTCU3-16D1 24VDC input module (positive common (sink type))

Item \ Type		DC input module AJ65VBTCU3-16D1	Appearance
Number of input points		16 points	
Isolation method		Photocoupler	
Rated input voltage		24VDC (ripple ratio: within 5%)	
Rated input current		Approx. 5mA	
Operating voltage range		19.2 to 26.4VDC	
Max. number of simultaneous input points		100%	
ON voltage/ON current		15VDC or higher/3mA or higher	
OFF voltage/OFF current		3VDC or lower/0.5mA or lower	
Input resistance		Approx. 4.7kΩ	
Response time	OFF→ON	0.2ms or less (at 24VDC)	
	ON→OFF	0.2ms or less (at 24VDC)	
Wiring method for common		16 points/common (3-wire, one-touch connector type)	
Input type		Positive common (sink type)	
Supply current for connected device		1.0A or lower/common	
Number of occupied stations		32-point assignment/station (16 points used)	
Module power supply	Voltage	24VDC (ripple ratio: within 5%) (allowable voltage range: 20.4 to 26.4VDC)	
	Current	40mA or lower (at 24VDC and all points ON)	
Noise immunity		Noise voltage 500Vp-p, noise width 1μs, noise frequency 25 to 60Hz (DC type noise simulator condition)	
Withstand voltage		500VAC for 1 minute between all DC external terminals and ground	
Insulation resistance		10MΩ or higher between all DC external terminals and ground (500VDC insulation resistance tester)	
Protection degree		IP1XB	
Weight		0.19kg	
External connection system	Communication part	One-touch connector for communication [Transmission circuit] 5-pin IDC plug is sold separately. <Optional> Online connector for communication: A6CON-LJ5P	
	Power supply part	One-touch connector for power supply and FG [Module power supply, I/O power supply, FG] 5-pin IDC plug is sold separately: A6CON-PW5P, A6CON-PW5P-SOD <Optional> Online connector for power supply: A6CON-PWJ5P	
	I/O part	One-touch connector for I/O 4-pin IDC plug is sold separately.	
Applicable DIN rail		TH35-7.5Fe, TH35-7.5Al (compliant with IEC 60715 and JIS C 2812)	
Applicable wire size	Connector for communication	Applicable cable: FANC-110SBH, FA-CBL200PSBH, CS-110	
	Connector for power supply and FG	0.66 to 0.98mm^2 (18 AWG) [ϕ2.2 to 3.0mm (A6CON-PW5P), ϕ2.0 to 2.3mm (A6CON-PW5P-SOD)] Wire diameter: 0.16mm or more Insulating coating material: PVC (heat-resistant)	
	Connector for I/O	ϕ1.0 to 1.4 (A6CON-P214), ϕ1.4 to 2.0 (A6CON-P220) [Applicable wire size: 0.14 to 0.2mm^2] ϕ1.0 to 1.4 (A6CON-P514), ϕ1.4 to 2.0 (A6CON-P520) [Applicable wire size: 0.3 to 0.5mm^2]	
Accessory		User's manual	

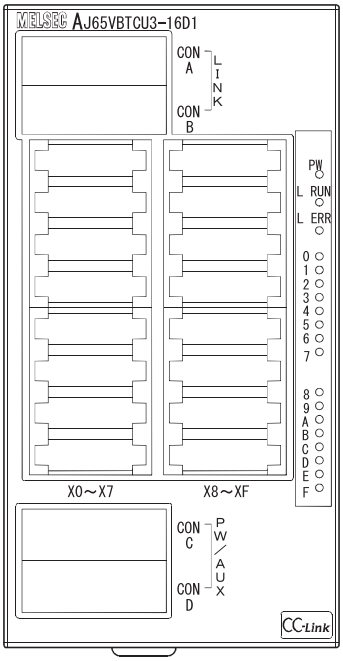

4 - 56

External connection

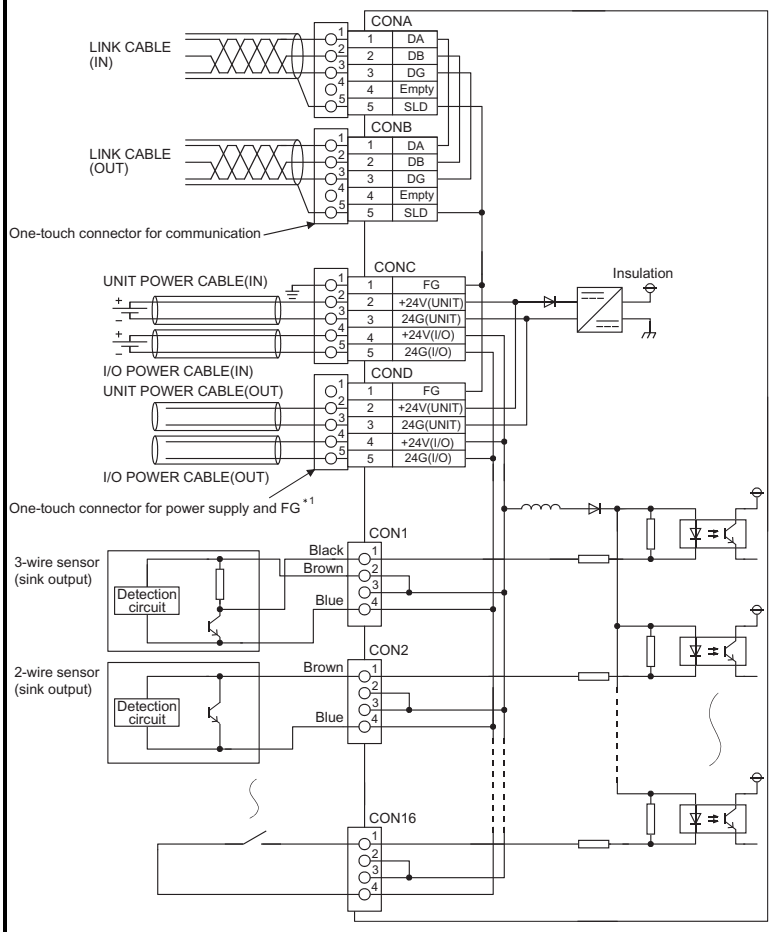

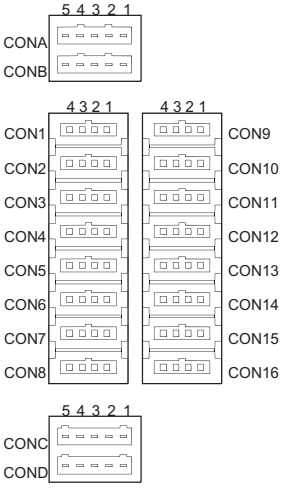

Viewed from the front of the module

Pin layout	Pin number		Signal name
	CON A, B	1	DA
		2	DB
		3	DG
		4	Empty
		5	SLD
	CON 1	1	X0
		2	+V
		3	+24V
		4	24G
	CON 2	1	X1
		2	+V
		3	+24V
		4	24G
	CON 3	1	X2
		2	+V
		3	+24V
		4	24G
	CON 4	1	X3
		2	+V
		3	+24V
		4	24G
	CON 5	1	X4
		2	+V
		3	+24V
		4	24G
	CON 6	1	X5
		2	+V
		3	+24V
		4	24G
	CON 7	1	X6
		2	+V
		3	+24V
		4	24G
	CON 8	1	X7
		2	+V
		3	+24V
		4	24G
	CON 9	1	X8
		2	+V
		3	+24V
		4	24G
	CON 10	1	X9
		2	+V
		3	+24V
		4	24G
	CON 11	1	XA
		2	+V
		3	+24V
		4	24G
	CON 12	1	XB
		2	+V
		3	+24V
		4	24G
	CON 13	1	XC
		2	+V
		3	+24V
		4	24G
	CON 14	1	XD
		2	+V
		3	+24V
		4	24G
	CON 15	1	XE
		2	+V
		3	+24V
		4	24G
	CON 16	1	XF
		2	+V
		3	+24V
		4	24G
	CON C, D	1	⏚ (FG)
		2	+24V (UNIT)
		3	24G (UNIT)
		4	+24V (I/O)
		5	24G (I/O)

* 1: Attach an unwired connector plug to an unused one-touch connector for power supply and FG.

4 - 57

AbN
automation

External connection

<When using online connectors>

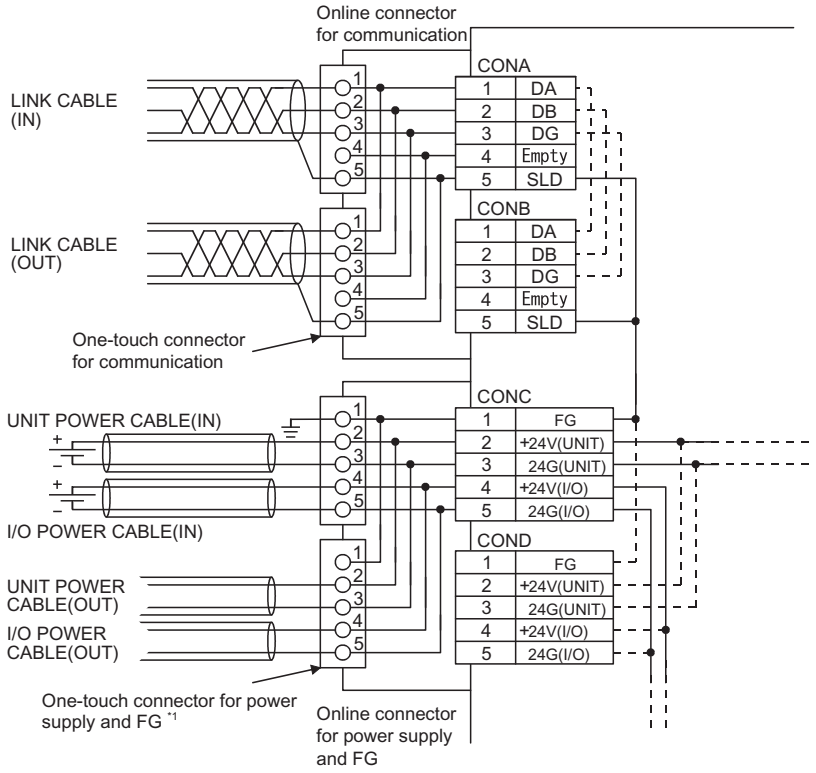

*1: Attach an unwired connector plug to an unused one-touch connector for power supply and FG.

4 - 58

4.4.6 AJ65SBTC1-32D 24VDC input module (positive common (sink), negative common (source) loading)

Item \ Type			DC input module: AJ65SBTC1-32D	Appearance
Number of input points			32 points	
Isolation method			Photocoupler	
Rated input voltage			24VDC (ripple ratio: within 5%)	
Rated input current			Approx. 5mA	
Operating voltage range			19.2 to 26.4VDC	
Max. number of simultaneous input points			80%	
ON voltage/ON current			14VDC or higher/3.5mA or higher	
OFF voltage/OFF current			6VDC or lower/1.7mA or lower	
Input resistance			Approx. 4.7kΩ	
Response time	OFF→ON		1.5ms or less (at 24VDC)	
	ON→OFF		1.5ms or less (at 24VDC)	
Wiring method for common			32 points/common (2 points) (1-wire, one-touch connector type)	
Input type			Positive/negative common shared type (sink/source shared type)	
Number of occupied stations			32-point assignment/station (32 points used)	
Module power supply	Voltage		24VDC (ripple ratio: within 5%) (allowable voltage range: 20.4 to 26.4VDC)	
	Current		45mA or lower (at 24VDC and all points ON)	
Noise immunity			Noise voltage 500Vp-p, noise width 1μs, noise frequency 25 to 60Hz (DC type noise simulator condition)	
Withstand voltage			500VAC for 1 minute between all DC external terminals and ground	
Insulation resistance			10MΩ or higher between all DC external terminals and ground (500VDC insulation resistance tester)	
Weight			0.16kg	
External connection system	Communication part, module power supply part		7-point two-piece terminal block [Transmission circuit, module power supply, FG] M3×5.2 screw (tightening torque range: 0.59 to 0.88N•m) Applicable solderless terminal: 2 or less	
	I/O power supply part		2-point direct-mount terminal block [I/O power supply] M3×5.2 screw (tightening torque range: 0.59 to 0.88N•m) Applicable solderless terminal: 2 or less	
	I/O part		Dedicated one-touch connector [I/O signals] 4-pin IDC plug is sold separately.	
Module mounting screw			M4 screw with plain washer finished round (tightening torque range: 0.78 to 1.08 N•m) Mountable with a DIN rail in 6 orientations	
Applicable DIN rail			TH35-7.5Fe, TH35-7.5Al (compliant with IEC 60715 and JIS C 2812)	
Applicable wire size	Communication part, module power supply part	Applicable solderless terminal	• RAV1.25-3 (compliant with JIS C 2805) [Applicable wire size: 0.3 to 1.25mm^2 (22 to 16 AWG) stranded wire] • V2-MS3, RAP2-3SL, TGV2-3N [Applicable wire size: 1.25 to 2.0mm^2 (16 to 14 AWG) stranded wire]	
	I/O power supply part			
	I/O part		ϕ1.0 to 1.4 (A6CON-P214), ϕ1.4 to 2.0 (A6CON-P220) [Applicable wire size: 0.14 to 0.2mm^2 (26 to 24 AWG) stranded wire] ϕ1.0 to 1.4 (A6CON-P514), ϕ1.4 to 2.0 (A6CON-P520) [Applicable wire size: 0.3 to 0.5 mm^2 (22 to 20 AWG) stranded wire]	
Wire	Material		Copper	
	Temperature rating		75°C or more	
Accessory			User's manual	

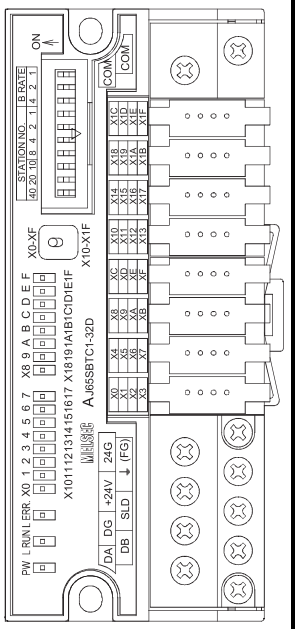

* For applicable solderless terminals connected to the terminal block, refer to the table above. Use applicable wires for the solderless terminals and fix them with an appropriate tightening torque. Use UL listed solderless terminals and, for crimping, use a tool recommended by their manufacturer.

4 - 59

AbN
automation

External connection

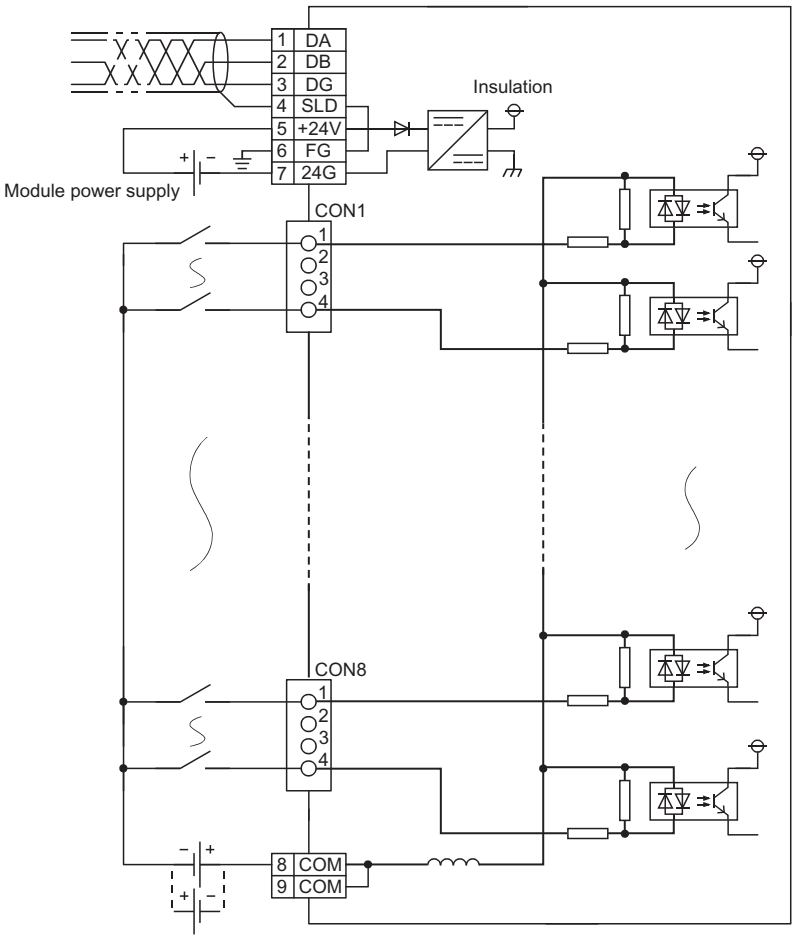

Terminal number		Signal name
TB1		DA
TB2		DB
TB3		DG
TB4		SLD
TB5		+24V
TB6		⏚ (FG)
TB7		24G
Pin number		Signal name
CON1	1	X0
	2	X1
	3	X2
	4	X3
CON2	1	X4
	2	X5
	3	X6
	4	X7
CON3	1	X8
	2	X9
	3	XA
	4	XB
CON4	1	XC
	2	XD
	3	XE
	4	XF
CON5	1	X10
	2	X11
	3	X12
	4	X13
CON6	1	X14
	2	X15
	3	X16
	4	X17
CON7	1	X18
	2	X19
	3	X1A
	4	X1B
CON8	1	X1C
	2	X1D
	3	X1E
	4	X1F
Terminal number		Signal name
TB8		COM
TB9		COM

Pin layout

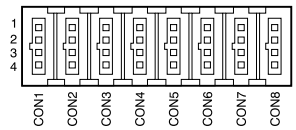

Viewed from the front of the module

4 - 60

4.4.7 AJ65SBTC1-32D1 24VDC input module (positive common (sink), negative common (source) loading)

Item			Type: DC input module AJ65SBTC1-32D1	Appearance
Number of input points			32 points	
Isolation method			Photocoupler	
Rated input voltage			24VDC (ripple ratio: within 5%)	
Rated input current			Approx. 5mA	
Operating voltage range			19.2 to 26.4VDC	
Max. number of simultaneous input points			100%	
ON voltage/ON current			15VDC or higher/3mA or higher	
OFF voltage/OFF current			3VDC or lower/0.5mA or lower	
Input resistance			Approx. 4.7kΩ	
Response time		OFF→ON	0.2ms or less (at 24VDC)	
		ON→OFF	0.2ms or less (at 24VDC)	
Wiring method for common			32 points/common (2 points) (1-wire, one-touch connector type)	
Input type			Positive/negative common shared type (sink/source shared type)	
Number of occupied stations			32-point assignment/station (32 points used)	
Module power supply		Voltage	24VDC (ripple ratio: within 5%) (allowable voltage range: 20.4 to 26.4VDC)	
		Current	45mA or lower (at 24VDC and all points ON)	
Noise immunity			Noise voltage 500Vp-p, noise width 1μs, noise frequency 25 to 60Hz (DC type noise simulator condition)	
Withstand voltage			500VAC for 1 minute between all DC external terminals and ground	
Insulation resistance			10MΩ or higher between all DC external terminals and ground (500VDC insulation resistance tester)	
Protection degree			IP2X	
Weight			0.16kg	
External connection system	Communication part, module power supply part		7-point two-piece terminal block [Transmission circuit, module power supply, FG] M3×5.2 screw (tightening torque range: 0.59 to 0.88N•m) Applicable solderless terminal: 2 or less	
	I/O power supply part		2-point direct-mount terminal block [I/O power supply] M3×5.2 screw (tightening torque range: 0.59 to 0.88N•m) Applicable solderless terminal: 2 or less	
	I/O part		Dedicated one-touch connector [I/O signals] 4-pin IDC plug is sold separately.	
Module mounting screw			M4 screw with plain washer finished round (tightening torque range: 0.78 to 1.08N•m) Mountable with a DIN rail in 6 orientations	
Applicable DIN rail			TH35-7.5Fe, TH35-7.5Al (compliant with IEC 60715 and JIS C 2812)	
Applicable wire size	Communication part, module power supply part	Applicable solderless terminal	• RAV1.25-3 (compliant with JIS C 2805) [Applicable wire size: 0.3 to 1.25mm^2 (22 to 16 AWG) stranded wire] • V2-MS3, RAP2-3SL, TGV2-3N [Applicable wire size: 1.25 to 2.0mm^2 (16 to 14 AWG) stranded wire]	
	I/O power supply part			
	I/O part		φ1.0 to 1.4 (A6CON-P214), φ1.4 to 2.0 (A6CON-P220) [Applicable wire size: 0.14 to 0.2mm^2 (26 to 24 AWG) stranded wire] φ1.0 to 1.4 (A6CON-P514), φ1.4 to 2.0 (A6CON-P520) [Applicable wire size: 0.3 to 0.5 mm^2 (22 to 20 AWG) stranded wire]	
Wire	Material		Copper	
	Temperature rating		75°C or more	
Accessory			User's manual	

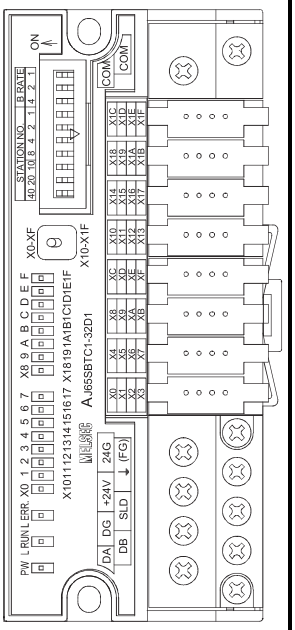

* For applicable solderless terminals connected to the terminal block, refer to the table above. Use applicable wires for the solderless terminals and fix them with an appropriate tightening torque. Use UL listed solderless terminals and, for crimping, use a tool recommended by their manufacturer.

4 - 61

AbN
automation

External connection

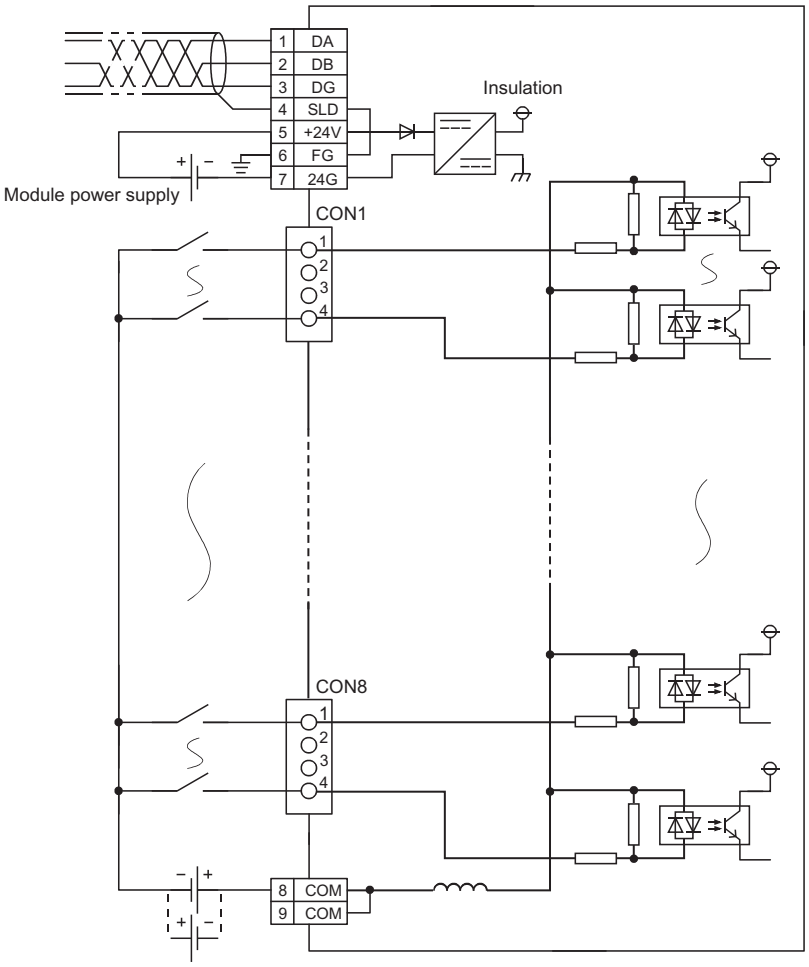

Terminal number		Signal name
TB1		DA
TB2		DB
TB3		DG
TB4		SLD
TB5		+24V
TB6		⏚ (FG)
TB7		24G
Pin number		Signal name
CON1	1	X0
	2	X1
	3	X2
	4	X3
CON2	1	X4
	2	X5
	3	X6
	4	X7
CON3	1	X8
	2	X9
	3	XA
	4	XB
CON4	1	XC
	2	XD
	3	XE
	4	XF
CON5	1	X10
	2	X11
	3	X12
	4	X13
CON6	1	X14
	2	X15
	3	X16
	4	X17
CON7	1	X18
	2	X19
	3	X1A
	4	X1B
CON8	1	X1C
	2	X1D
	3	X1E
	4	X1F
Terminal number		Signal name
TB8		COM
TB9		COM

Pin layout

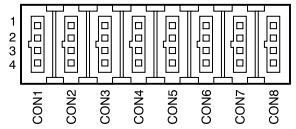

Viewed from the front of the module

4 - 62

4.5 FCN Connector Type Input Module

4.5.1 AJ65SBTCF1-32D 24VDC input module (positive common (sink), negative common (source) loading)

Item \ Type			DC input module: AJ65SBTCF1-32D	Appearance
Number of input points			32 points	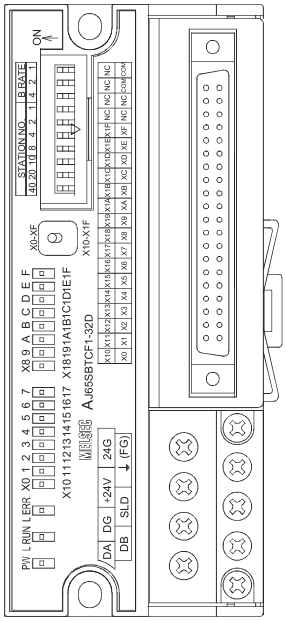
Isolation method			Photocoupler	
Rated input voltage			24VDC (ripple ratio: within 5%)	
Rated input current			Approx. 5mA	
Operating voltage range			19.2 to 26.4VDC	
Max. number of simultaneous input points			100%	
ON voltage/ON current			14VDC or higher/3.5mA or higher	
OFF voltage/OFF current			6VDC or lower/1.7mA or lower	
Input resistance			Approx. 4.7kΩ	
Response time		OFF→ON	1.5ms or less (at 24VDC)	
		ON→OFF	1.5ms or less (at 24VDC)	
Wiring method for common			32 points/common (1-wire, FCN connector type)	
Input type			Positive/negative common shared type (sink/source shared type)	
Number of occupied stations			32-point assignment/station (32 points used)	
Module power supply		Voltage	24VDC (ripple ratio: within 5%) (allowable voltage range: 20.4 to 26.4VDC)	
		Current	45mA or lower (at 24VDC and all points ON)	
Noise immunity			Noise voltage 500Vp-p, noise width 1μs, noise frequency 25 to 60Hz (DC type noise simulator condition)	
Withstand voltage			500VAC for 1 minute between all DC external terminals and ground	
Insulation resistance			10MΩ or higher between all DC external terminals and ground (500VDC insulation resistance tester)	
Protection degree			IP2X	
Weight			0.15kg	
External connection system	Communication part, module power supply part		7-point two-piece terminal block [Transmission circuit, module power supply, FG] M3×5.2 screw (tightening torque range: 0.59 to 0.88N•m) Applicable solderless terminal: 2 or less	
	I/O power supply part, I/O part		40-pin connector [I/O power supply, I/O signal] (A6CON1, A6CON2, A6CON3, A6CON4)	
Module mounting screw			M4 screw with plain washer finished round (tightening torque range: 0.78 to 1.08N•m) Mountable with a DIN rail in 6 orientations	
Applicable DIN rail			TH35-7.5Fe, TH35-7.5Al (compliant with IEC 60715 and JIS C 2812)	
Applicable wire size	Communication part, module power supply part	Applicable solderless terminal*1	• RAV1.25-3 (compliant with JIS C 2805) [Applicable wire size: 0.3 to 1.25mm^2 (22 to 16 AWG) stranded wire] • V2-MS3, RAP2-3SL, TGV2-3N [Applicable wire size: 1.25 to 2.0mm^2 (16 to 14 AWG) stranded wire]	
	I/O power supply part, I/O part		• 0.08 to 0.3mm^2 (28 to 22 AWG) stranded wire (A6CON1 and A6CON4)*2 • 0.08 to 0.2mm^2 (28 to 24 AWG) stranded wire (A6CON2) • 0.08mm^2 (28 AWG) stranded wire, ϕ0.25mm (30 AWG) single wire (A6CON3)	
Wire	Material		Copper	
	Temperature rating		75°C or more	
Applicable connector/ terminal block conversion module			A6TBXY36, A6TBXY54, A6TBX70	
Accessory			User's manual	

*1 For applicable solderless terminals connected to the terminal block, refer to the table above. Use applicable wires for the solderless terminals and fix them with an appropriate tightening torque. Use UL listed solderless terminals and, for crimping, use a tool recommended by their manufacturer.

*2 Use cables with outside diameter of 1.3mm or shorter to connect 40 cables to the connector. In addition, consider the amount of current to be used and select appropriate cables.

4 - 63

AbN
automation

External connection

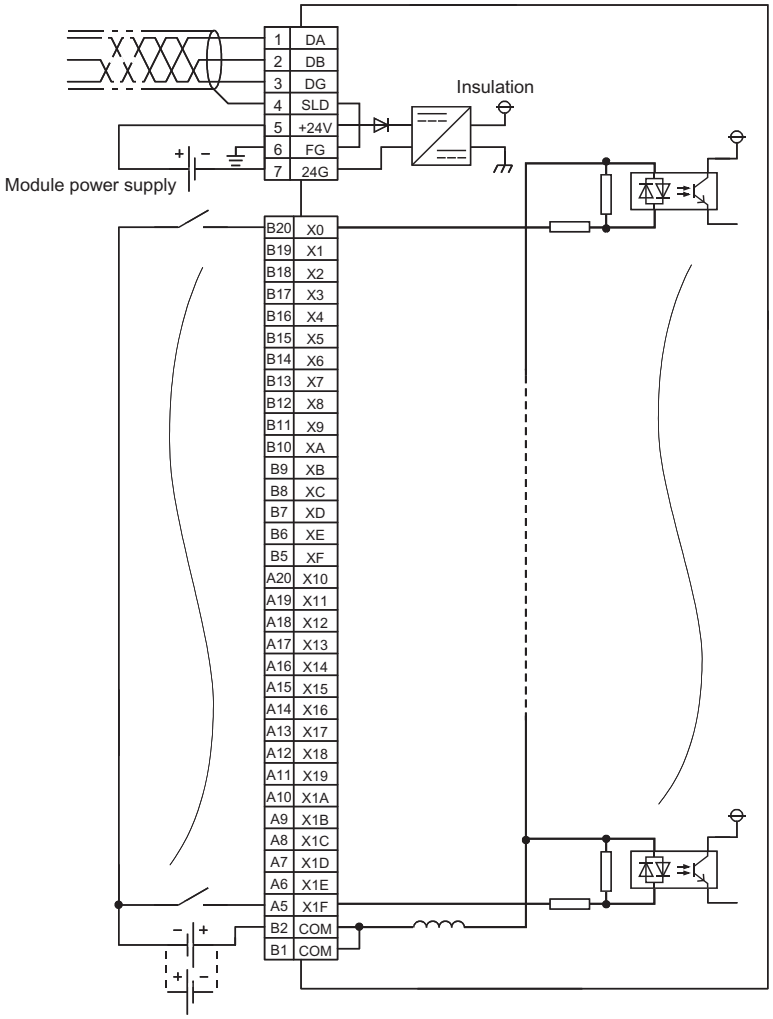

Pin layout

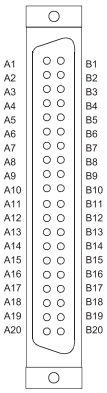

Viewed from the front of the module

Terminal number	Signal name
TB1	DA
TB2	DB
TB3	DG
TB4	SLD
TB5	+24V
TB6	⏚ (FG)
TB7	24G

Pin number	Signal name	Pin number	Signal name
B20	X0	A20	X10
B19	X1	A19	X11
B18	X2	A18	X12
B17	X3	A17	X13
B16	X4	A16	X14
B15	X5	A15	X15
B14	X6	A14	X16
B13	X7	A13	X17
B12	X8	A12	X18
B11	X9	A11	X19
B10	XA	A10	X1A
B9	XB	A9	X1B
B8	XC	A8	X1C
B7	XD	A7	X1D
B6	XE	A6	X1E
B5	XF	A5	X1F
B4	Empty	A4	Empty
B3	Empty	A3	Empty
B2	COM	A2	Empty
B1	COM	A1	Empty

4 - 64

4.6 Waterproof Type Input Module

4.6.1 AJ65FBTA4-16D 24VDC input module (positive common (sink type))

Item \ Type		DC input module	
		AJ65FBTA4-16D	Appearance
Number of input points		16 points	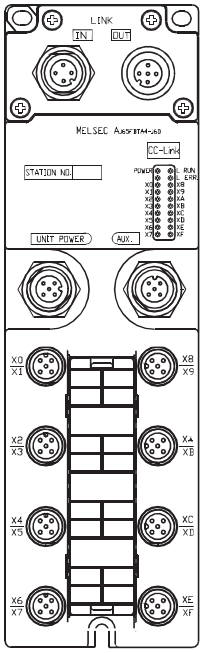
Isolation method		Photocoupler	
Rated input voltage		24VDC (ripple ratio: within 5%)	
Rated input current		Approx. 7mA	
Operating voltage range		20.4 to 26.4VDC	
Max. number of simultaneous input points		100%	
ON voltage/ON current		14VDC or higher/3.5mA or higher	
OFF voltage/OFF current		6VDC or lower/1.7mA or lower	
Input resistance		Approx. 3.3kΩ	
Response time	OFF→ON	1.5ms or less (at 24VDC)	
	ON→OFF	1.5ms or less (at 24VDC)	
Wiring method for common		16 points/common (2- to 4-wire, waterproof connector type)	
Input type		Positive common (sink type)	
Supply current for connected device		1.0A of lower/common	
Number of occupied stations		32-point assignment/station (16 points used)	
Module power supply	Voltage	24VDC (ripple ratio: within 5%) (allowable voltage range: 20.4 to 26.4VDC)	
	Current	40mA or lower (at 24VDC and all points ON)	
Noise immunity		Noise voltage 500Vp-p, noise width 1μs, noise frequency 25 to 60Hz (DC type noise simulator condition)	
Withstand voltage		500VAC for 1 minute between all DC external terminals and ground	
Insulation resistance		10MΩ or higher between all DC external terminals and ground (500VDC insulation resistance tester)	
Protection degree		IP67	
Weight		0.40kg	
Accessory		User's manual	
Optional item		Waterproof cap: A6CAP-WP2 (20 pieces)	
Other connecting devices		Refer to Section 1.6.1.	

4 - 65

AbN
automation

External connection

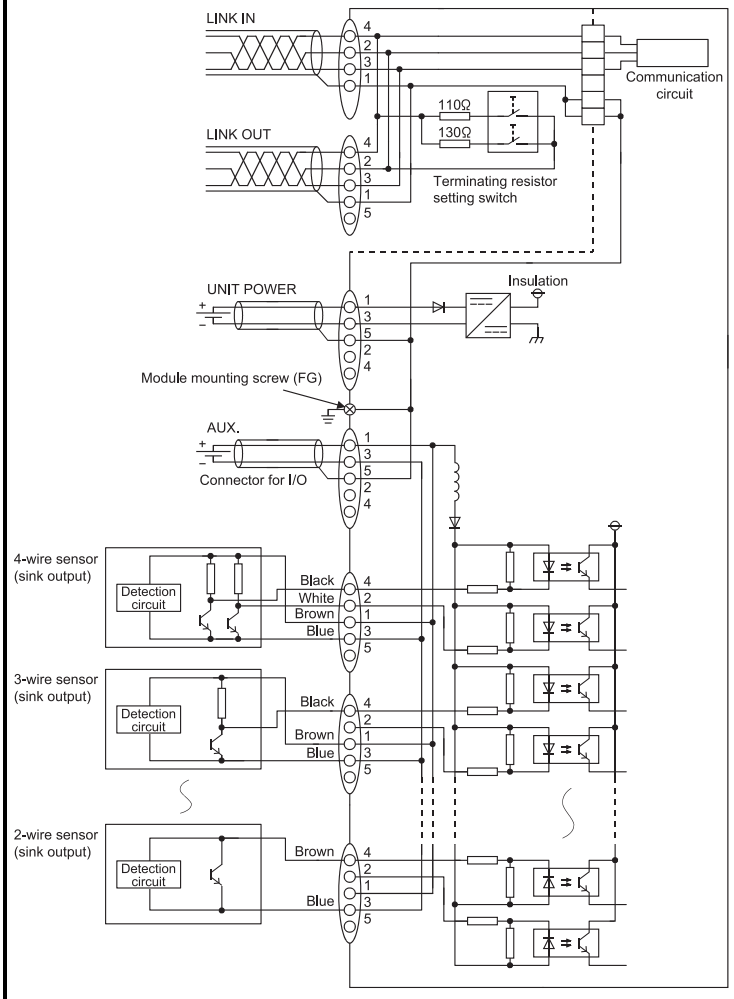

Pin layout

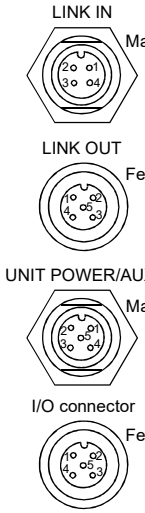

Connector for communication

Pin number	LINK IN	LINK OUT
1	SLD	SLD
2	DB	DB
3	DG	DG
4	DA	DA
5	No pins	Empty

Connector for power supply

Pin number	UNIT POWER	AUX.
1	+24V(UNIT)	+24V(I/O)
2	Empty	Empty
3	24G(UNIT)	24G(I/O)
4	Empty	Empty
5	⏚ (FG)	⏚ (FG)

Connector for I/O

	Pin number	Signal name		Pin number	Signal name
X0/X1	1	+24V	X8/X9	1	+24V
	2	X1		2	X9
	3	24G		3	24G
	4	X0		4	X8
	5	Empty		5	Empty
X2/X3	1	+24V	XA/XB	1	+24V
	2	X3		2	XB
	3	24G		3	24G
	4	X2		4	XA
	5	Empty		5	Empty
X4/X5	1	+24V	XC/XD	1	+24V
	2	X5		2	XD
	3	24G		3	24G
	4	X4		4	XC
	5	Empty		5	Empty
X6/X7	1	+24V	XE/XF	1	+24V
	2	X7		2	XF
	3	24G		3	24G
	4	X6		4	XE
	5	Empty		5	Empty

4 - 66

4.6.2 AJ65FBTA4-16DE 24VDC input module (negative common (source type))

Item \ Type		DC input module	
		AJ65FBTA4-16DE	Appearance
Number of input points		16 points	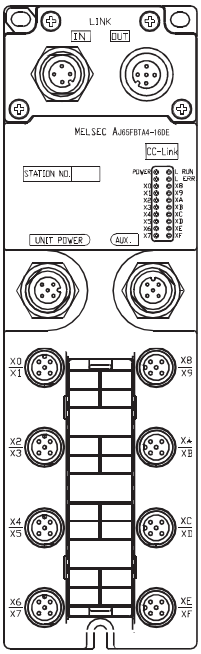
Isolation method		Photocoupler	
Rated input voltage		24VDC (ripple ratio: within 5%)	
Rated input current		Approx. 7mA	
Operating voltage range		20.4 to 26.4VDC	
Max. number of simultaneous input points		100%	
ON voltage/ON current		14VDC or higher/3.5mA or higher	
OFF voltage/OFF current		6VDC or lower/1.7mA or lower	
Input resistance		Approx. 3.3kΩ	
Response time	OFF→ON	1.5ms or less (at 24VDC)	
	ON→OFF	1.5ms or less (at 24VDC)	
Wiring method for common		16 points/common (2- to 4-wire, waterproof connector type)	
Input type		Negative common (source type)	
Supply current for connected device		1.0A or lower/common	
Number of occupied stations		32-point assignment/station (16 points used)	
Module power supply	Voltage	24VDC (ripple ratio: within 5%) (allowable voltage range: 20.4 to 26.4VDC)	
	Current	40mA or lower (at 24VDC and all points ON)	
Noise immunity		Noise voltage 500Vp-p, noise width 1μs, noise frequency 25 to 60Hz (DC type noise simulator condition)	
Withstand voltage		500VAC for 1 minute between all DC external terminals and ground	
Insulation resistance		10MΩ or higher between all DC external terminals and ground (500VDC insulation resistance tester)	
Protection degree		IP67	
Weight		0.40kg	
Accessory		User's manual	
Optional item		Waterproof cap: A6CAP-WP2 (20 pieces)	
Other connecting devices		Refer to Section 1.6.1.	

AbN
automation

External connection

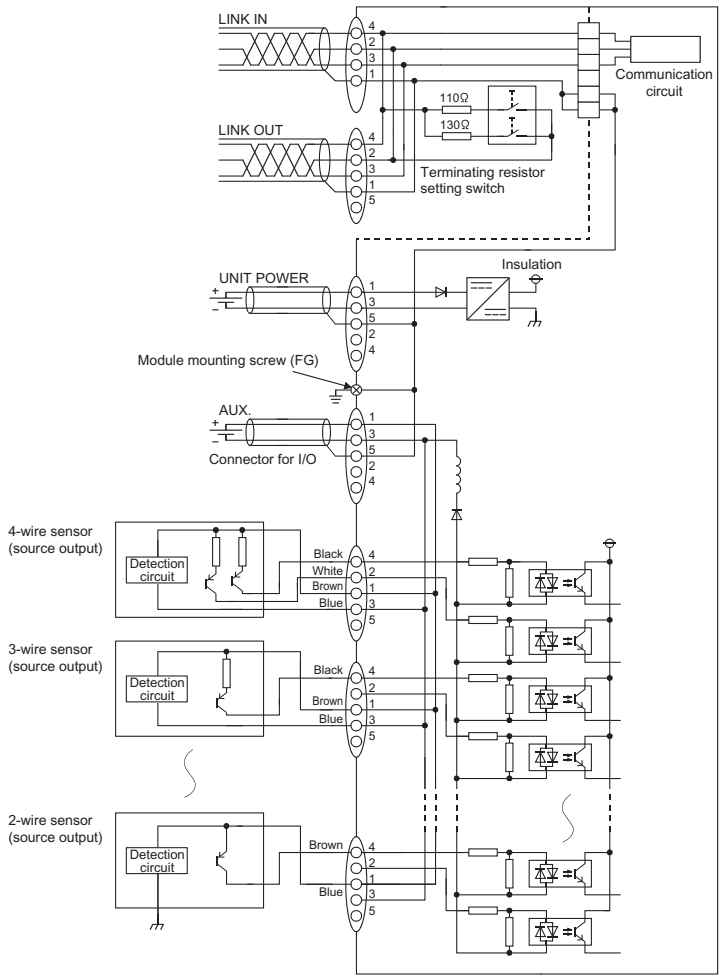

Pin layout

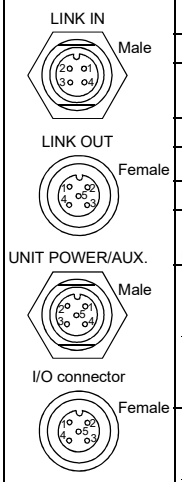

Connector for communication

Pin number	LINK IN	LINK OUT
1	SLD	SLD
2	DB	DB
3	DG	DG
4	DA	DA
5	No pins	Empty

Connector for power supply

Pin number	UNIT POWER	AUX.
1	+24V (UNIT)	+24V(I/O)
2	Empty	Empty
3	24G (UNIT)	24G(I/O)
4	Empty	Empty
5	⏚ (FG)	⏚ (FG)

Connector for I/O

	Pin number	Signal name		Pin number	Signal name
X0/X1	1	+24V	X8/X9	1	+24V
	2	X1		2	X9
	3	24G		3	24G
	4	X0		4	X8
	5	Empty		5	Empty
X2/X3	1	+24V	XA/XB	1	+24V
	2	X3		2	XB
	3	24G		3	24G
	4	X2		4	XA
	5	Empty		5	Empty
X4/X5	1	+24V	XC/XD	1	+24V
	2	X5		2	XD
	3	24G		3	24G
	4	X4		4	XC
	5	Empty		5	Empty
X6/X7	1	+24V	XE/XF	1	+24V
	2	X7		2	XF
	3	24G		3	24G
	4	X6		4	XE
	5	Empty		5	Empty

4 - 68

4.6.3 AJ65SBTW4-16D 24VDC input module (positive common (sink), negative common (source) loading)

Item \ Type			DC input module AJ65SBTW4-16D	Appearance
Operating ambient temperature			0 to 45°C	
Storage ambient temperature			-20 to 65°C *1 *3	
Number of input points			16 points	
Isolation method			Photocoupler	
Rated input voltage			24VDC (ripple ratio: within 5%)	
Rated input current			Approx. 5mA	
Operating voltage range			20.4 to 26.4VDC	
Max. number of simultaneous input points			100%	
ON voltage/ON current			14VDC or higher/3.5mA or higher	
OFF voltage/OFF current			6VDC or lower/1.7mA or lower	
Input resistance			Approx. 4.7kΩ	
Response time		OFF→ON	1.5ms or less (at 24VDC)	
		ON→OFF	1.5ms or less (at 24VDC)	
Wiring method for common			16 points/common (4-wire, waterproof connector type) Same as that for the module power supply	
Input type			Positive/negative common shared type (sink/source shared type) (Selected using the switch.)	
Number of occupied stations			32-point assignment/station (16 points used)	
Module power supply		Voltage	24VDC (ripple ratio: within 5%) (allowable voltage range: 20.4 to 26.4VDC)	
		Current	35mA or lower (at 24VDC and all points ON), excluding input current for I/O part	
Noise immunity			Noise voltage 500Vp-p, noise width 1μs, noise frequency 25 to 60Hz (DC type noise simulator condition)	
Withstand voltage			500VAC for 1 minute between all DC external terminals and ground	
Insulation resistance			10MΩ or higher between all DC external terminals and ground (500VDC insulation resistance tester)	
Protection degree			IP67	
Weight			0.70kg	
External connection system			7-point two-piece terminal block [Transmission circuit, module power supply, FG] M3×5.2 screw (tightening torque range: 0.59 to 0.88N•m) Waterproof connector [compliant with IEC 60947-5-2, M12, male, 4 pins, IP67] (connector for I/O) <Optional> Dustproof cap: A6CAP-DC1 (20 pieces), waterproof cap: A6CAP-WP1 (20 pieces)	
Tightening torque range*2	Module top-cover mounting screw (M3)		0.54 to 0.64N•m	
	Module front-cover mounting screw (M3)		0.54 to 0.64N•m	
	Module mounting screw (M4 with plain washer finished round)		1.27 to 1.47N•m	
	Nut for pipe		0.99 to 1.48N•m	
Applicable wire size	Communication part, module power supply part, I/O power supply part		Applicable cable size: ϕ5.0 to 8.0mm • RAV1.25-3 (compliant with JIS C 2805) [Applicable wire size: 0.3 to 1.25mm^2] • V2-MS3, RAP2-3SL, TGV2-3N [Applicable wire size: 1.25 to 2.0mm^2 (16 to 14 AWG) stranded wire]	
	Connector for I/O		-	
Accessory			User's manual, waterproof plug (2 pieces)	

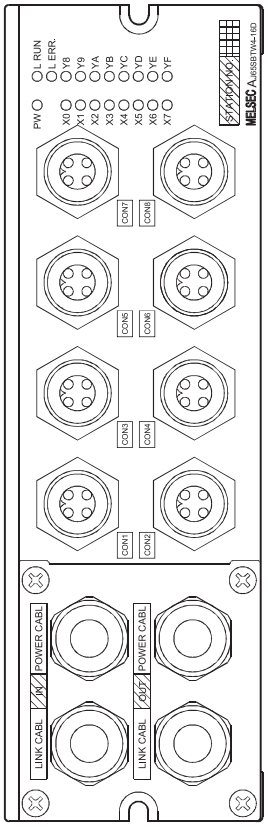

* 1: Store the wired module in the ambient temperatures of -10 to 55°C.

* 2: Do not apply an excessive force (39N or more) to the connected cable at the inlet of the pipe.

* 3: To use the wired module that has been stored exceeding the ambient temperature of 55°C, retighten the nuts.

AbN
automation

External connection (positive common (sink input))

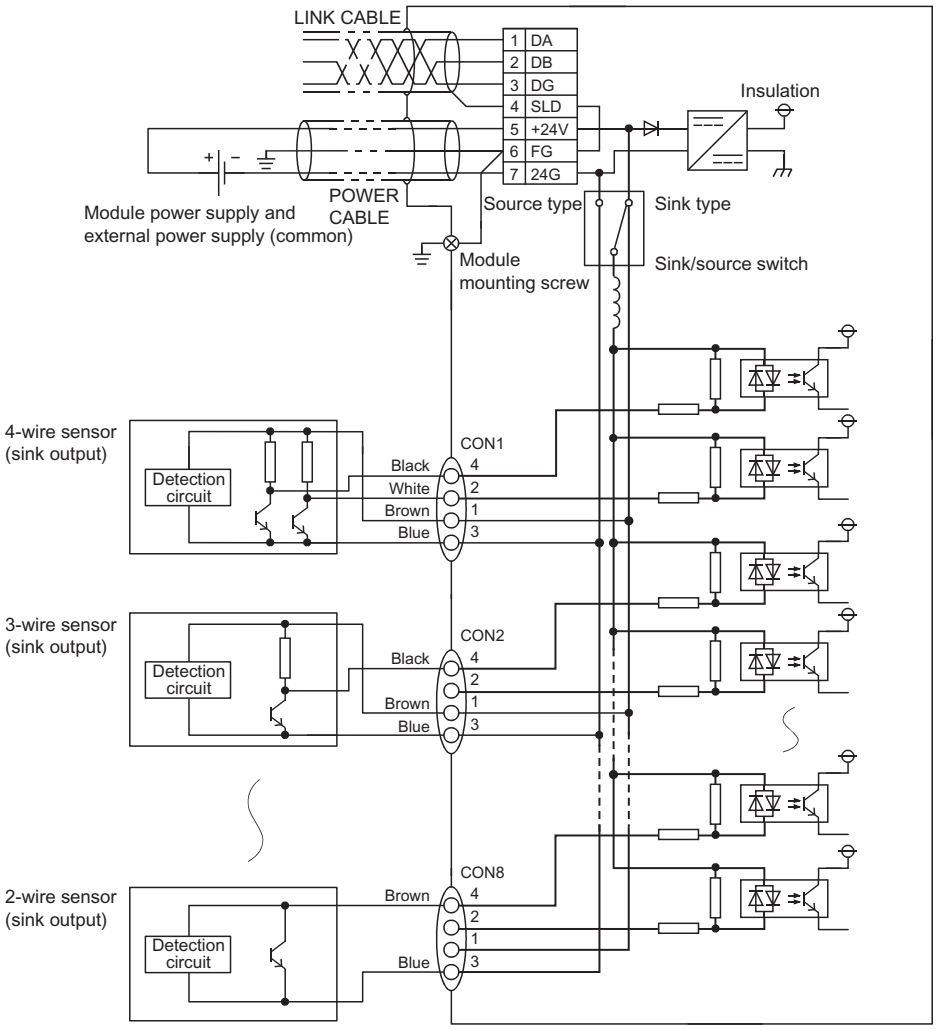

Terminal number	Signal name
TB1	DA
TB2	DB
TB3	DG
TB4	SLD
TB5	+24V
TB6	⏚ (FG)
TB7	24G

Pin number		Signal name
CON1	1	+24V
	2	X8
	3	24G
	4	X0
CON2	1	+24V
	2	X9
	3	24G
	4	X1
CON3	1	+24V
	2	XA
	3	24G
	4	X2
CON4	1	+24V
	2	XB
	3	24G
	4	X3
CON5	1	+24V
	2	XC
	3	24G
	4	X4
CON6	1	+24V
	2	XD
	3	24G
	4	X5
CON7	1	+24V
	2	XE
	3	24G
	4	X6
CON8	1	+24V
	2	XF
	3	24G
	4	X7

Pin layout

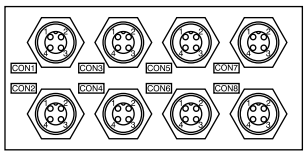

Viewed from the front of the module

4 - 70

External connection (negative common (source input))

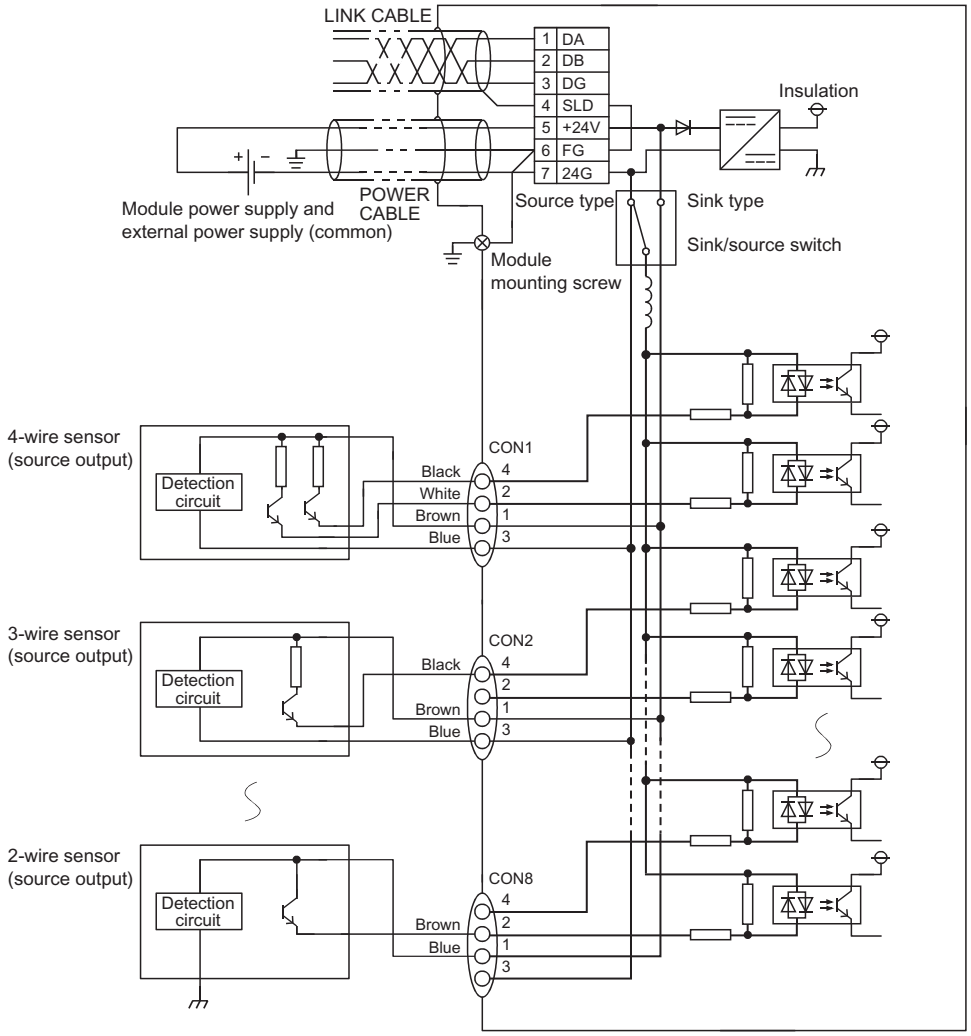

Terminal number	Signal name
TB1	DA
TB2	DB
TB3	DG
TB4	SLD
TB5	+24V
TB6	⏚ (FG)
TB7	24G

Pin number		Signal name
CON1	1	+24V
	2	X8
	3	24G
	4	X0
CON2	1	+24V
	2	X9
	3	24G
	4	X1
CON3	1	+24V
	2	XA
	3	24G
	4	X2
CON4	1	+24V
	2	XB
	3	24G
	4	X3
CON5	1	+24V
	2	XC
	3	24G
	4	X4
CON6	1	+24V
	2	XD
	3	24G
	4	X5
CON7	1	+24V
	2	XE
	3	24G
	4	X6
CON8	1	+24V
	2	XF
	3	24G
	4	X7

Pin layout

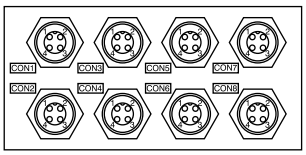

Viewed from the front of the module

4 - 71

AbN
automation

5 SPECIFICATIONS FOR OUTPUT MODULES

This chapter describes the specifications for an output module that can be connected to the CC-Link system.

5.1 Terminal Block Type Output Module

5.1.1 AJ65SBTB1-8T transistor output module (sink type)

Item \ Type		Transistor output module	
		AJ65SBTB1-8T	Appearance
Number of output points		8 points	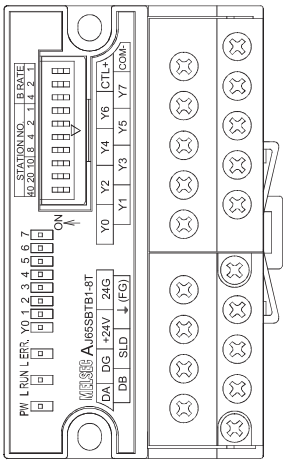
Isolation method		Photocoupler	
Rated load voltage		12/24VDC (ripple ratio: within 5%)	
Operating load voltage range		10.2 to 26.4VDC	
Max. load current		0.5A/point, 2.4A/common	
Max. inrush current		1.0A, 10ms or less	
Leakage current at OFF		0.25mA or lower	
Max. voltage drop at ON		0.3VDC or lower (TYP.) 0.5A, 0.6VDC or lower (MAX.) 0.5A	
Output type		Sink type	
Protection function		Overload protection, overvoltage protection, overheat protection	
Response time	OFF→ON	0.5ms or less	
	ON→OFF	1.5ms or less (resistive load)	
External power supply for output part	Voltage	12/24VDC (ripple ratio: within 5%) (allowable voltage range: 10.2 to 26.4VDC)	
	Current	15mA or lower (TYP. 24VDC/common), excluding external load current	
Surge suppressor		Zener diode	
Wiring method for common		8 points/common (1-wire, terminal block type)	
Number of occupied stations		32-point assignment/station (8 points used)	
Module power supply	Voltage	24VDC (ripple ratio: within 5%) (allowable voltage range: 20.4 to 26.4VDC)	
	Current	35mA or lower (at 24VDC and all points ON)	
Noise immunity		Noise voltage 500Vp-p, noise width 1μs, noise frequency 25 to 60Hz (DC type noise simulator condition)	
Withstand voltage		500VAC for 1 minute between all DC external terminals and ground	
Insulation resistance		10MΩ or higher between all DC external terminals and ground (500VDC insulation resistance tester)	
Protection degree		IP2X	
Weight		0.14kg	
External connection system	Communication part, module power supply part	7-point two-piece terminal block [Transmission circuit, module power supply, FG] M3×5.2 screw (tightening torque range: 0.59 to 0.88N•m) Applicable solderless terminal: 2 or less	
	I/O power supply part, I/O part	10-point direct-mount terminal block [I/O power supply, I/O signal] M3×5.2 screw (tightening torque range: 0.59 to 0.88N•m) Applicable solderless terminal: 2 or less	
Module mounting screw		M4 screw with plain washer finished round (tightening torque range: 0.78 to 1.08N•m) Mountable with a DIN rail in 6 orientations	
Applicable DIN rail		TH35-7.5Fe, TH35-7.5Al (compliant with IEC 60715 and JIS C 2812)	
Applicable solderless terminal		• RAV1.25-3 (compliant with JIS C 2805) [Applicable wire size: 0.3 to 1.25mm^2 (22 to 16 AWG) stranded wire] • V2-MS3, RAP2-3SL, TGV2-3N [Applicable wire size: 1.25 to 2.0mm^2 (16 to 14 AWG) stranded wire]	
Wire	Material	Copper	
	Temperature rating	75°C or more	
Accessory		User's manual	

* For applicable solderless terminals connected to the terminal block, refer to the table above. Use applicable wires for the solderless terminals and fix them with an appropriate tightening torque. Use UL listed solderless terminals and, for crimping, use a tool recommended by their manufacturer.

5 - 1

External connection

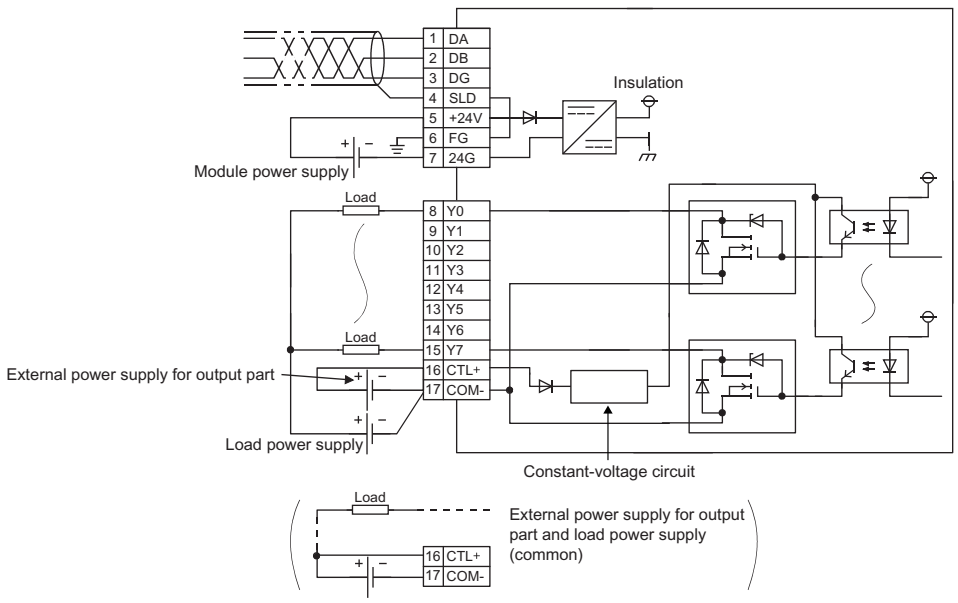

Terminal number	Signal name
TB1	DA
TB2	DB
TB3	DG
TB4	SLD
TB5	+24V
TB6	⏚ (FG)
TB7	24G
TB8	Y0
TB9	Y1
TB10	Y2
TB11	Y3
TB12	Y4
TB13	Y5
TB14	Y6
TB15	Y7
TB16	CTL+
TB17	COM-

5

5 - 2

5.1.2 AJ65SBTB1-8T1 transistor output module (sink type)

Item \ Type		Transistor output module	
		AJ65SBTB1-8T1	Appearance
Number of output points		8 points	
Isolation method		Photocoupler	
Rated load voltage		12/24VDC (ripple ratio: within 5%)	
Operating load voltage range		10.2 to 26.4VDC	
Max. load current		0.5A/point, 2.4A/common	
Max. inrush current		1.0A, 10ms or less	
Leakage current at OFF		0.1mA or lower	
Max. voltage drop at ON		0.3VDC or lower (TYP.) 0.5A, 0.6VDC or lower (MAX.) 0.5A	
Output type		Sink type	
Protection function		None	
Response time	OFF→ON	0.5ms or less	
	ON→OFF	1.5ms or less (resistive load)	
External power supply for output part	Voltage	12/24VDC (ripple ratio: within 5%) (allowable voltage range: 10.2 to 26.4VDC)	
	Current	15mA or lower (TYP. 24VDC/common), excluding external load current	
Surge suppressor		Zener diode	
Wiring method for common		8 points/common (1-wire, terminal block type)	
Number of occupied stations		32-point assignment/station (8 points used)	
Module power supply	Voltage	24VDC (ripple ratio: within 5%) (allowable voltage range: 20.4 to 26.4VDC)	
	Current	35mA or lower (at 24VDC and all points ON)	
Noise immunity		Noise voltage 500Vp-p, noise width 1μs, noise frequency 25 to 60Hz (DC type noise simulator condition)	
Withstand voltage		500VAC for 1 minute between all DC external terminals and ground	
Insulation resistance		10MΩ or higher between all DC external terminals and ground (500VDC insulation resistance tester)	
Protection degree		IP2X	
Weight		0.14kg	
External connection system	Communication part, module power supply part	7-point two-piece terminal block [Transmission circuit, module power supply, FG] M3×5.2 screw (tightening torque range: 0.59 to 0.88N•m) Applicable solderless terminal: 2 or less	
	I/O power supply part, I/O part	10-point direct-mount terminal block [I/O power supply, I/O signal] M3×5.2 screw (tightening torque range: 0.59 to 0.88N•m) Applicable solderless terminal: 2 or less	
Module mounting screw		M4 screw with plain washer finished round (tightening torque range: 0.78 to 1.08N•m) Mountable with a DIN rail in 6 orientations	
Applicable DIN rail		TH35-7.5Fe, TH35-7.5Al (compliant with IEC 60715 and JIS C 2812)	
Applicable solderless terminal		• RAV1.25-3 (compliant with JIS C 2805) [Applicable wire size: 0.3 to 1.25mm^2 (22 to 16 AWG) stranded wire] • V2-MS3, RAP2-3SL, TGV2-3N [Applicable wire size: 1.25 to 2.0mm^2 (16 to 14 AWG) stranded wire]	
Wire	Material	Copper	
	Temperature rating	75°C or more	
Accessory		User's manual	

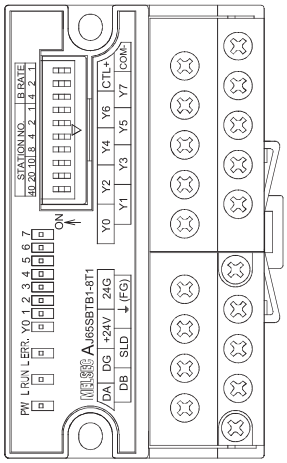

* For applicable solderless terminals connected to the terminal block, refer to the table above. Use applicable wires for the solderless terminals and fix them with an appropriate tightening torque. Use UL listed solderless terminals and, for crimping, use a tool recommended by their manufacturer.

External connection

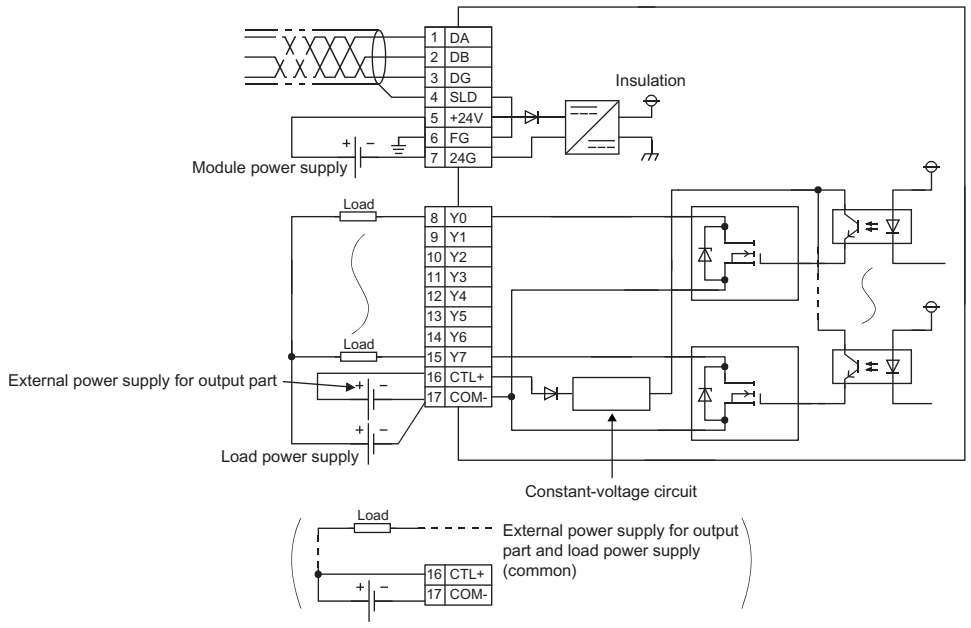

Terminal number	Signal name
TB1	DA
TB2	DB
TB3	DG
TB4	SLD
TB5	+24V
TB6	⏚ (FG)
TB7	24G
TB8	Y0
TB9	Y1
TB10	Y2
TB11	Y3
TB12	Y4
TB13	Y5
TB14	Y6
TB15	Y7
TB16	CTL+
TB17	COM-

5 - 4

AbN
automation

5.1.3 AJ65SBTB2-8T transistor output module (sink type)

Item \ Type		Transistor output module	Appearance
		AJ65SBTB2-8T	
Number of output points		8 points	
Isolation method		Photocoupler	
Rated load voltage		12/24VDC (ripple ratio: within 5%)	
Operating load voltage range		10.2 to 26.4VDC	
Max. load current		0.5A/point, 2.4A/common	
Max. inrush current		1.0A, 10ms or less	
Leakage current at OFF		0.25mA or lower	
Max. voltage drop at ON		0.3VDC or lower (TYP.) 0.5A, 0.6VDC or lower (MAX.) 0.5A	
Output type		Sink type	
Protection function		Overload protection, overvoltage protection, overheat protection	
Response time	OFF→ON	0.5ms or less	
	ON→OFF	1.5ms or less (resistive load)	
External power supply for output part	Voltage	12/24VDC (ripple ratio: within 5%) (allowable voltage range: 10.2 to 26.4VDC)	
	Current	17.8mA or lower (TYP. 24VDC/common), excluding external load current	
Surge suppressor		Zener diode	
Wiring method for common		8 points/common (2-wire, terminal block type)	
Number of occupied stations		32-point assignment/station (8 points used)	
Module power supply	Voltage	24VDC (ripple ratio: within 5%) (allowable voltage range: 20.4 to 26.4VDC)	
	Current	45mA or lower (at 24VDC and all points ON)	
Noise immunity		Noise voltage 500Vp-p, noise width 1μs, noise frequency 25 to 60Hz (DC type noise simulator condition)	
Withstand voltage		500VAC for 1 minute between all DC external terminals and ground	
Insulation resistance		10MΩ or higher between all DC external terminals and ground (500VDC insulation resistance tester)	
Protection degree		IP2X	
Weight		0.18kg	
External connection system	Communication part, module power supply part	7-point two-piece terminal block [Transmission circuit, module power supply, FG] M3×5.2 screw (tightening torque range: 0.59 to 0.88N•m) Applicable solderless terminal: 2 or less	
	I/O power supply part, I/O part	18-point direct-mount terminal block [I/O power supply, I/O signal] M3×5.2 screw (tightening torque range: 0.59 to 0.88N•m) Applicable solderless terminal: 2 or less	
Module mounting screw		M4 screw with plain washer finished round (tightening torque range: 0.78 to 1.08N•m) Mountable with a DIN rail in 6 orientations	
Applicable DIN rail		TH35-7.5Fe, TH35-7.5Al (compliant with IEC 60715 and JIS C 2812)	
Applicable solderless terminal		• RAV1.25-3 (compliant with JIS C 2805) [Applicable wire size: 0.3 to 1.25mm^2 (22 to 16 AWG) stranded wire] • V2-MS3, RAP2-3SL, TGV2-3N [Applicable wire size: 1.25 to 2.0mm^2 (16 to 14 AWG) stranded wire]	
Wire	Material	Copper	
	Temperature rating	75°C or more	
Accessory		User's manual	

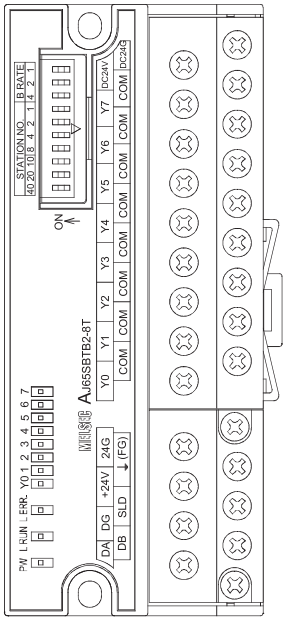

* For applicable solderless terminals connected to the terminal block, refer to the table above. Use applicable wires for the solderless terminals and fix them with an appropriate tightening torque. Use UL listed solderless terminals and, for crimping, use a tool recommended by their manufacturer.

5 - 5

External connection

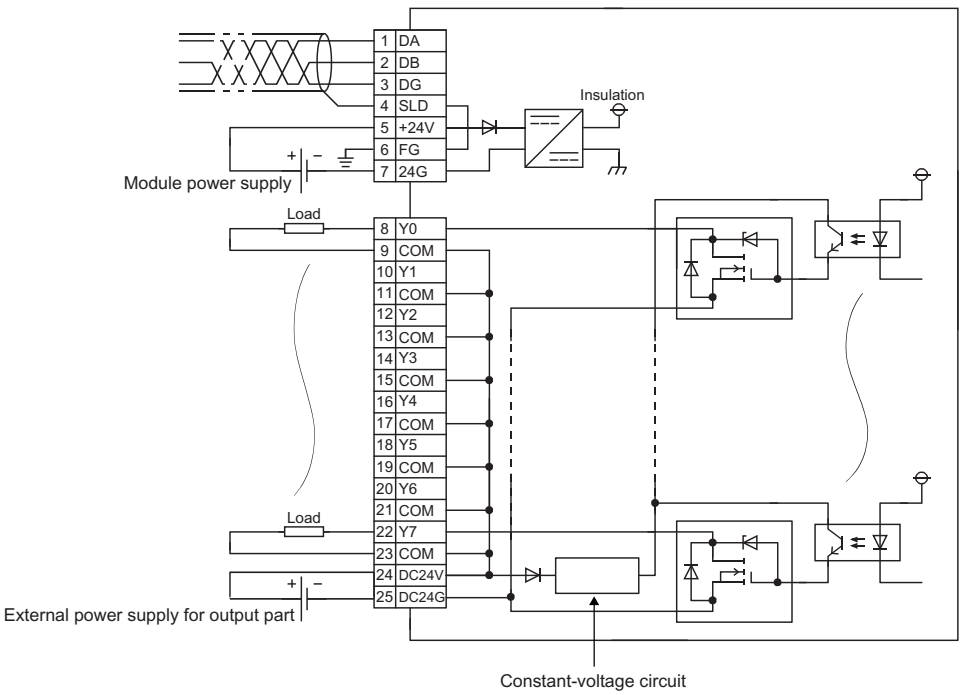

Terminal number	Signal name
TB1	DA
TB2	DB
TB3	DG
TB4	SLD
TB5	+24V
TB6	⏚ (FG)
TB7	24G
TB8	Y0
TB9	COM
TB10	Y1
TB11	COM
TB12	Y2
TB13	COM
TB14	Y3
TB15	COM
TB16	Y4
TB17	COM
TB18	Y5
TB19	COM
TB20	Y6
TB21	COM
TB22	Y7
TB23	COM
TB24	DC24V
TB25	DC24G

AbN
automation

5.1.4 AJ65SBTB2-8T1 transistor output module (sink type)

Item \ Type		Transistor output module	
		AJ65SBTB2-8T1	Appearance
Number of output points		8 points	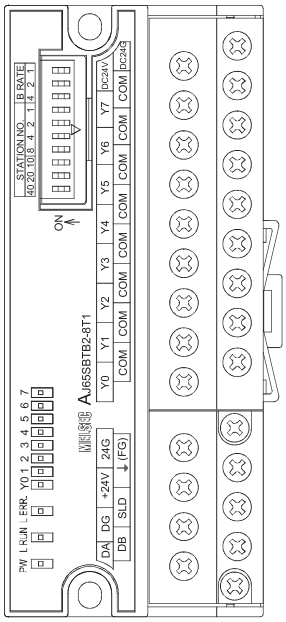
Isolation method		Photocoupler	
Rated load voltage		12/24VDC (ripple ratio: within 5%)	
Operating load voltage range		10.2 to 26.4VDC	
Max. load current		0.5A/point, 2.4A/common	
Max. inrush current		1.0A, 10ms or less	
Leakage current at OFF		0.1mA or lower	
Max. voltage drop at ON		0.3VDC or lower (TYP.) 0.5A, 0.6VDC or lower (MAX.) 0.5A	
Output type		Sink type	
Protection function		None	
Response time	OFF→ON	0.5ms or less	
	ON→OFF	1.5ms or less (resistive load)	
External power supply for output part	Voltage	12/24VDC (ripple ratio: within 5%) (allowable voltage range: 10.2 to 26.4VDC)	
	Current	17.8mA or lower (TYP. 24VDC/common), excluding external load current	
Surge suppressor		Zener diode	
Wiring method for common		8 points/common (2-wire, terminal block type)	
Number of occupied stations		32-point assignment/station (8 points used)	
Module power supply	Voltage	24VDC (ripple ratio: within 5%) (allowable voltage range: 20.4 to 26.4VDC)	
	Current	45mA or lower (at 24VDC and all points ON)	
Noise immunity		Noise voltage 500Vp-p, noise width 1μs, noise frequency 25 to 60Hz (DC type noise simulator condition)	
Withstand voltage		500VAC for 1 minute between all DC external terminals and ground	
Insulation resistance		10MΩ or higher between all DC external terminals and ground (500VDC insulation resistance tester)	
Protection degree		IP2X	
Weight		0.18kg	
External connection system	Communication part, module power supply part	7-point two-piece terminal block [Transmission circuit, module power supply, FG] M3×5.2 screw (tightening torque range: 0.59 to 0.88N•m) Applicable solderless terminal: 2 or less	
	I/O power supply part, I/O part	18-point direct-mount terminal block [I/O power supply, I/O signal] M3×5.2 screw (tightening torque range: 0.59 to 0.88N•m) Applicable solderless terminal: 2 or less	
Module mounting screw		M4 screw with plain washer finished round (tightening torque range: 0.78 to 1.08N•m) Mountable with a DIN rail in 6 orientations	
Applicable DIN rail		TH35-7.5Fe, TH35-7.5Al (compliant with IEC 60715 and JIS C 2812)	
Applicable solderless terminal		• RAV1.25-3 (compliant with JIS C 2805) [Applicable wire size: 0.3 to 1.25mm^2 (22 to 16 AWG) stranded wire] • V2-MS3, RAP2-3SL, TGV2-3N [Applicable wire size: 1.25 to 2.0mm^2 (16 to 14 AWG) stranded wire]	
Wire	Material	Copper	
	Temperature rating	75°C or more	
Accessory		User's manual	

* For applicable solderless terminals connected to the terminal block, refer to the table above. Use applicable wires for the solderless terminals and fix them with an appropriate tightening torque. Use UL listed solderless terminals and, for crimping, use a tool recommended by their manufacturer.

5 - 7

External connection

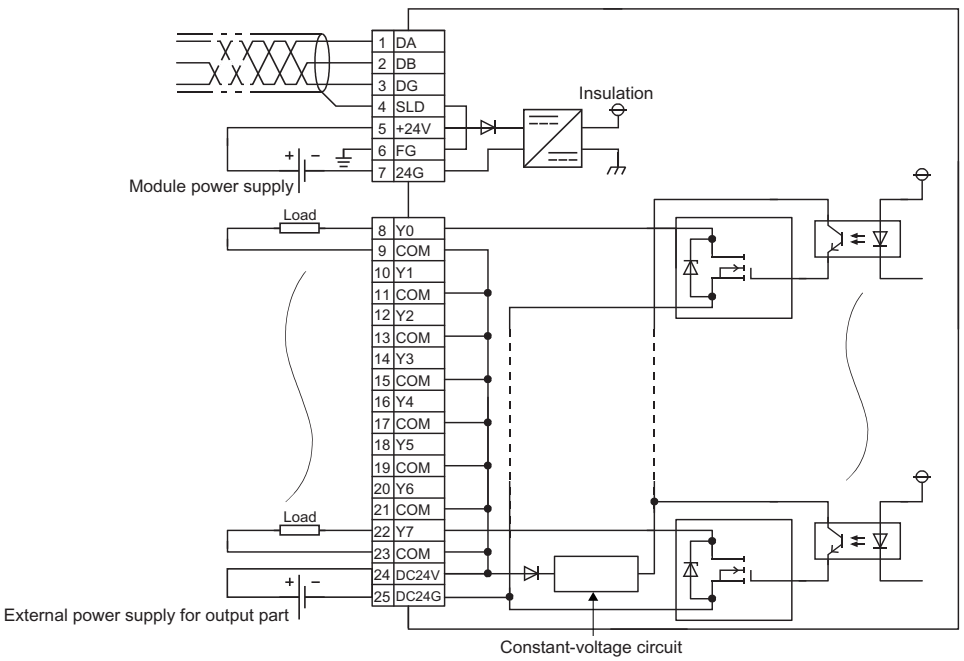

Terminal number	Signal name
TB1	DA
TB2	DB
TB3	DG
TB4	SLD
TB5	+24V
TB6	⏚ (FG)
TB7	24G
TB8	Y0
TB9	COM
TB10	Y1
TB11	COM
TB12	Y2
TB13	COM
TB14	Y3
TB15	COM
TB16	Y4
TB17	COM
TB18	Y5
TB19	COM
TB20	Y6
TB21	COM
TB22	Y7
TB23	COM
TB24	DC24V
TB25	DC24G

AbN
automation

5.1.5 AJ65SBTB1-16T transistor output module (sink type)

Item \ Type		Transistor output module	
		AJ65SBTB1-16T	Appearance
Number of output points		16 points	
Isolation method		Photocoupler	
Rated load voltage		12/24VDC (ripple ratio: within 5%)	
Operating load voltage range		10.2 to 26.4VDC	
Max. load current		0.5A/point, 3.6A/common	
Max. inrush current		1.0A, 10ms or less	
Leakage current at OFF		0.25mA or lower	
Max. voltage drop at ON		0.3VDC or lower (TYP.) 0.5A, 0.6VDC or lower (MAX.) 0.5A	
Output type		Sink type	
Protection function		Overload protection, overvoltage protection, overheat protection	
Response time	OFF→ON	0.5ms or less	
	ON→OFF	1.5ms or less (resistive load)	
External Power supply for output part	Voltage	12/24VDC (ripple ratio: within 5%) (allowable voltage range: 10.2 to 26.4VDC)	
	Current	30mA or lower (TYP. 24VDC/common), excluding external load current	
Surge suppressor		Zener diode	
Wiring method for common		16 points/common (1-wire, terminal block type)	
Number of occupied stations		32-point assignment/station (16 points used)	
Module power supply	Voltage	24VDC (ripple ratio: within 5%) (allowable voltage range: 20.4 to 26.4VDC)	
	Current	50mA or lower (at 24VDC and all points ON)	
Noise immunity		Noise voltage 500Vp-p, noise width 1μs, noise frequency 25 to 60Hz (DC type noise simulator condition)	
Withstand voltage		500VAC for 1 minute between all DC external terminals and ground	
Insulation resistance		10MΩ or higher between all DC external terminals and ground (500VDC insulation resistance tester)	
Protection degree		IP2X	
Weight		0.18kg	
External connection system	Communication part, module power supply part	7-point two-piece terminal block [Transmission circuit, module power supply, FG] M3×5.2 screw (tightening torque range: 0.59 to 0.88N•m) Applicable solderless terminal: 2 or less	
	I/O power supply part, I/O part	18-point direct-mount terminal block [I/O power supply, I/O signal] M3×5.2 screw (tightening torque range: 0.59 to 0.88N•m) Applicable solderless terminal: 2 or less	
Module mounting screw		M4 screw with plain washer finished round (tightening torque range: 0.78 to 1.08N•m) Mountable with a DIN rail in 6 orientations	
Applicable DIN rail		TH35-7.5Fe, TH35-7.5Al (compliant with IEC 60715 and JIS C 2812)	
Applicable solderless terminal		• RAV1.25-3 (compliant with JIS C 2805) [Applicable wire size: 0.3 to 1.25mm^2 (22 to 16 AWG) stranded wire] • V2-MS3, RAP2-3SL, TGV2-3N [Applicable wire size: 1.25 to 2.0mm^2 (16 to 14 AWG) stranded wire]	
Wire	Material	Copper	
	Temperature rating	75°C or more	
Accessory		User's manual	

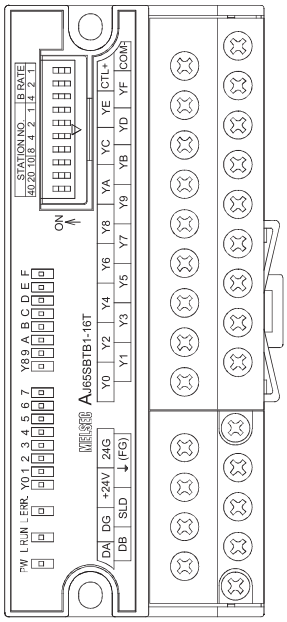

* For applicable solderless terminals connected to the terminal block, refer to the table above. Use applicable wires for the solderless terminals and fix them with an appropriate tightening torque. Use UL listed solderless terminals and, for crimping, use a tool recommended by their manufacturer.

5 - 9

External connection

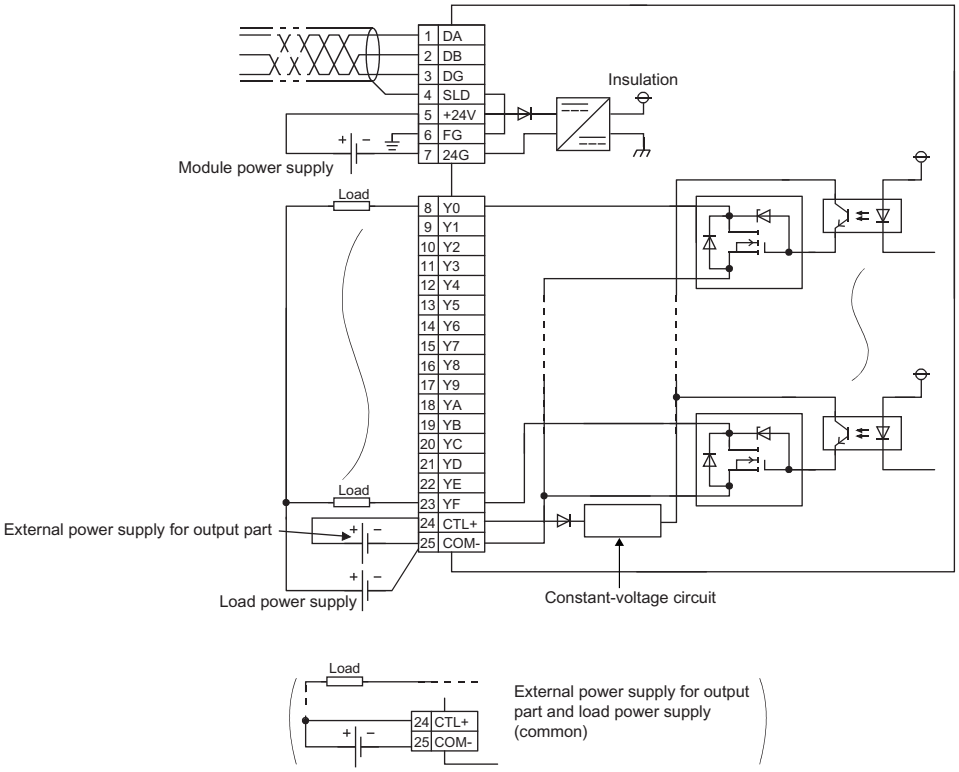

Terminal number	Signal name
TB1	DA
TB2	DB
TB3	DG
TB4	SLD
TB5	+24V
TB6	⏚ (FG)
TB7	24G
TB8	Y0
TB9	Y1
TB10	Y2
TB11	Y3
TB12	Y4
TB13	Y5
TB14	Y6
TB15	Y7
TB16	Y8
TB17	Y9
TB18	YA
TB19	YB
TB20	YC
TB21	YD
TB22	YE
TB23	YF
TB24	CTL+
TB25	COM-

5 - 10

5.1.6 AJ65SBTB1-16T1 transistor output module (sink type)

Item \ Type		Transistor output module	
		AJ65SBTB1-16T1	Appearance
Number of output points		16 points	
Isolation method		Photocoupler	
Rated load voltage		12/24VDC (ripple ratio: within 5%)	
Operating load voltage range		10.2 to 26.4VDC	
Max. load current		0.5A/point, 3.6A/common	
Max. inrush current		1.0A, 10ms or less	
Leakage current at OFF		0.1mA or lower	
Max. voltage drop at ON		0.3VDC or lower (TYP.) 0.5A, 0.6VDC or lower (MAX.) 0.5A	
Output type		Sink type	
Protection function		None	
Response time	OFF→ON	0.5ms or less	
	ON→OFF	1.5ms or less (resistive load)	
External power supply for output part	Voltage	12/24VDC (ripple ratio: within 5%) (allowable voltage range: 10.2 to 26.4VDC)	
	Current	30mA or lower (TYP. 24VDC/common), excluding external load current	
Surge suppressor		Zener diode	
Wiring method for common		16 points/common (1-wire, terminal block type)	
Number of occupied stations		32-point assignment/station (16 points used)	
Module power supply	Voltage	24VDC (ripple ratio: within 5%) (allowable voltage range: 20.4 to 26.4VDC)	
	Current	50mA or lower (at 24VDC and all points ON)	
Noise immunity		Noise voltage 500Vp-p, noise width 1μs, noise frequency 25 to 60Hz (DC type noise simulator condition)	
Withstand voltage		500VAC for 1 minute between all DC external terminals and ground	
Insulation resistance		10MΩ or higher between all DC external terminals and ground (500VDC insulation resistance tester)	
Protection degree		IP2X	
Weight		0.18kg	
External connection system	Communication part, module power supply part	7-point two-piece terminal block [Transmission circuit, module power supply, FG] M3×5.2 screw (tightening torque range: 0.59 to 0.88N•m) Applicable solderless terminal: 2 or less	
	I/O power supply part, I/O part	18-point direct-mount terminal block [I/O power supply, I/O signal] M3×5.2 screw (tightening torque range: 0.59 to 0.88N•m) Applicable solderless terminal: 2 or less	
Module mounting screw		M4 screw with plain washer finished round (tightening torque range: 0.78 to 1.08N•m) Mountable with a DIN rail in 6 orientations	
Applicable DIN rail		TH35-7.5Fe, TH35-7.5Al (compliant with IEC 60715 and JIS C 2812)	
Applicable solderless terminal		• RAV1.25-3 (compliant with JIS C 2805) [Applicable wire size: 0.3 to 1.25mm^2 (22 to 16 AWG) stranded wire] • V2-MS3, RAP2-3SL, TGV2-3N [Applicable wire size: 1.25 to 2.0mm^2 (16 to 14 AWG) stranded wire]	
Wire	Material	Copper	
	Temperature rating	75°C or more	
Accessory		User's manual	

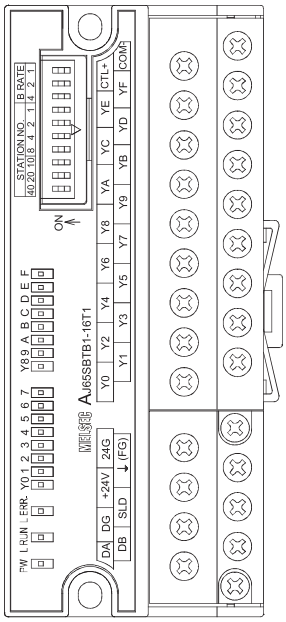

* For applicable solderless terminals connected to the terminal block, refer to the table above. Use applicable wires for the solderless terminals and fix them with an appropriate tightening torque. Use UL listed solderless terminals and, for crimping, use a tool recommended by their manufacturer.

External connection

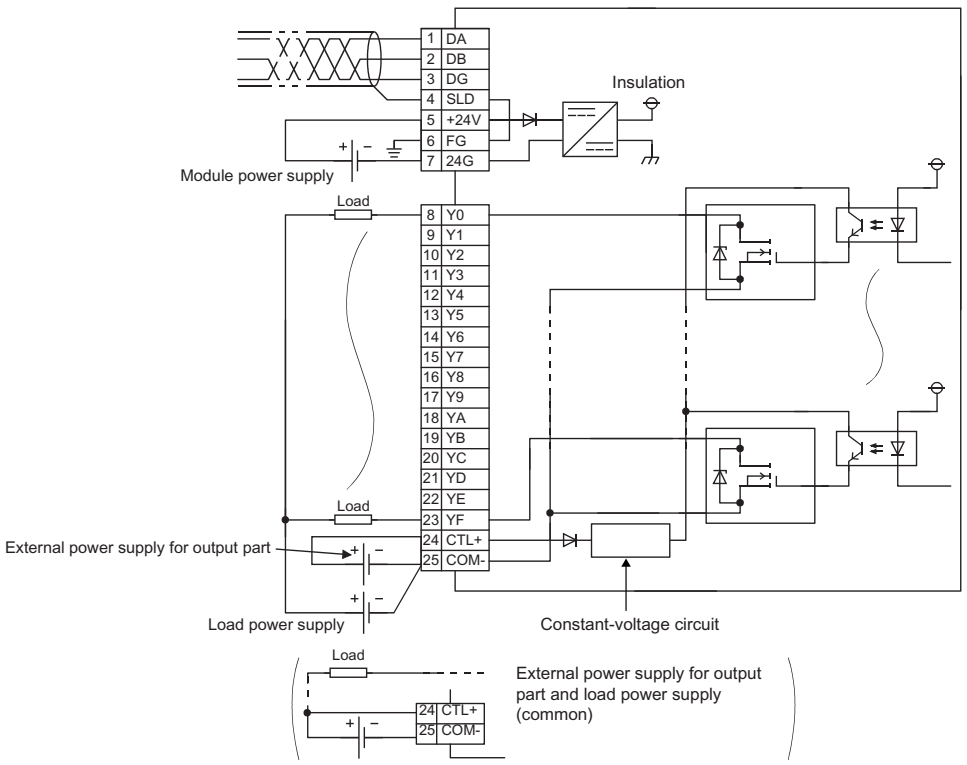

Terminal number	Signal name
TB1	DA
TB2	DB
TB3	DG
TB4	SLD
TB5	+24V
TB6	⏚ (FG)
TB7	24G
TB8	Y0
TB9	Y1
TB10	Y2
TB11	Y3
TB12	Y4
TB13	Y5
TB14	Y6
TB15	Y7
TB16	Y8
TB17	Y9
TB18	YA
TB19	YB
TB20	YC
TB21	YD
TB22	YE
TB23	YF
TB24	CTL+
TB25	COM-

5 - 12

AbN
automation

5.1.7 AJ65SBTB2-16T transistor output module (sink type)

Item \ Type		Transistor output module	
		AJ65SBTB2-16T	Appearance
Number of output points		16 points	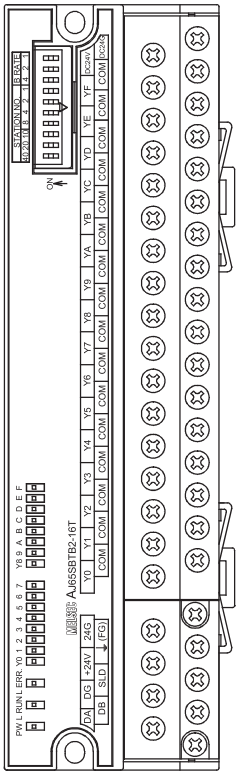
Isolation method		Photocoupler	
Rated load voltage		12/24VDC (ripple ratio: within 5%)	
Operating load voltage range		10.2 to 26.4VDC	
Max. load current		0.5A/point, 3.6A/common	
Max. inrush current		1.0A, 10ms or less	
Leakage current at OFF		0.25mA or lower	
Max. voltage drop at ON		0.3VDC or lower (TYP.) 0.5A, 0.6VDC or lower (MAX.) 0.5A	
Output type		Sink type	
Protection function		Overload protection, overvoltage protection, overheat protection	
Response time	OFF→ON	0.5ms or less	
	ON→OFF	1.5ms or less (resistive load)	
External power supply for output part	Voltage	12/24VDC (ripple ratio: within 5%) (allowable voltage range: 10.2 to 26.4VDC)	
	Current	24.2mA or lower (TYP. 24VDC/common), excluding external load current	
Surge suppressor		Zener diode	
Wiring method for common		16 points/common (2-wire, terminal block type)	
Number of occupied stations		32-point assignment/station (16 points used)	
Module power supply	Voltage	24VDC (ripple ratio: within 5%) (allowable voltage range: 20.4 to 26.4VDC)	
	Current	55mA or lower (at 24VDC and all points ON)	
Noise immunity		Noise voltage 500Vp-p, noise width 1μs, noise frequency 25 to 60Hz (DC type noise simulator condition)	
Withstand voltage		500VAC for 1 minute between all DC external terminals and ground	
Insulation resistance		10MΩ or higher between all DC external terminals and ground (500VDC insulation resistance tester)	
Protection degree		IP2X	
Weight		0.25kg	
External connection system	Communication part, module power supply part	7-point two-piece terminal block [Transmission circuit, module power supply, FG] M3×5.2 screw (tightening torque range: 0.59 to 0.88N•m) Applicable solderless terminal: 2 or less	
	I/O power supply part, I/O part	34-point direct-mount terminal block [I/O power supply, I/O signal] M3×5.2 screw (tightening torque range: 0.59 to 0.88N•m) Applicable solderless terminal: 2 or less	
Module mounting screw		M4 screw with plain washer finished round (tightening torque range: 0.78 to 1.08N•m) Mountable with a DIN rail in 6 orientations	
Applicable DIN rail		TH35-7.5Fe, TH35-7.5Al (compliant with IEC 60715 and JIS C 2812)	
Applicable solderless terminal		• RAV1.25-3 (compliant with JIS C 2805) [Applicable wire size: 0.3 to 1.25mm^2 (22 to 16 AWG) stranded wire] • V2-MS3, RAP2-3SL, TGV2-3N [Applicable wire size: 1.25 to 2.0mm^2 (16 to 14 AWG) stranded wire]	
Wire	Material	Copper	
	Temperature rating	75°C or more	
Accessory		User's manual	

* For applicable solderless terminals connected to the terminal block, refer to the table above. Use applicable wires for the solderless terminals and fix them with an appropriate tightening torque. Use UL listed solderless terminals and, for crimping, use a tool recommended by their manufacturer.

5 - 13

External connection

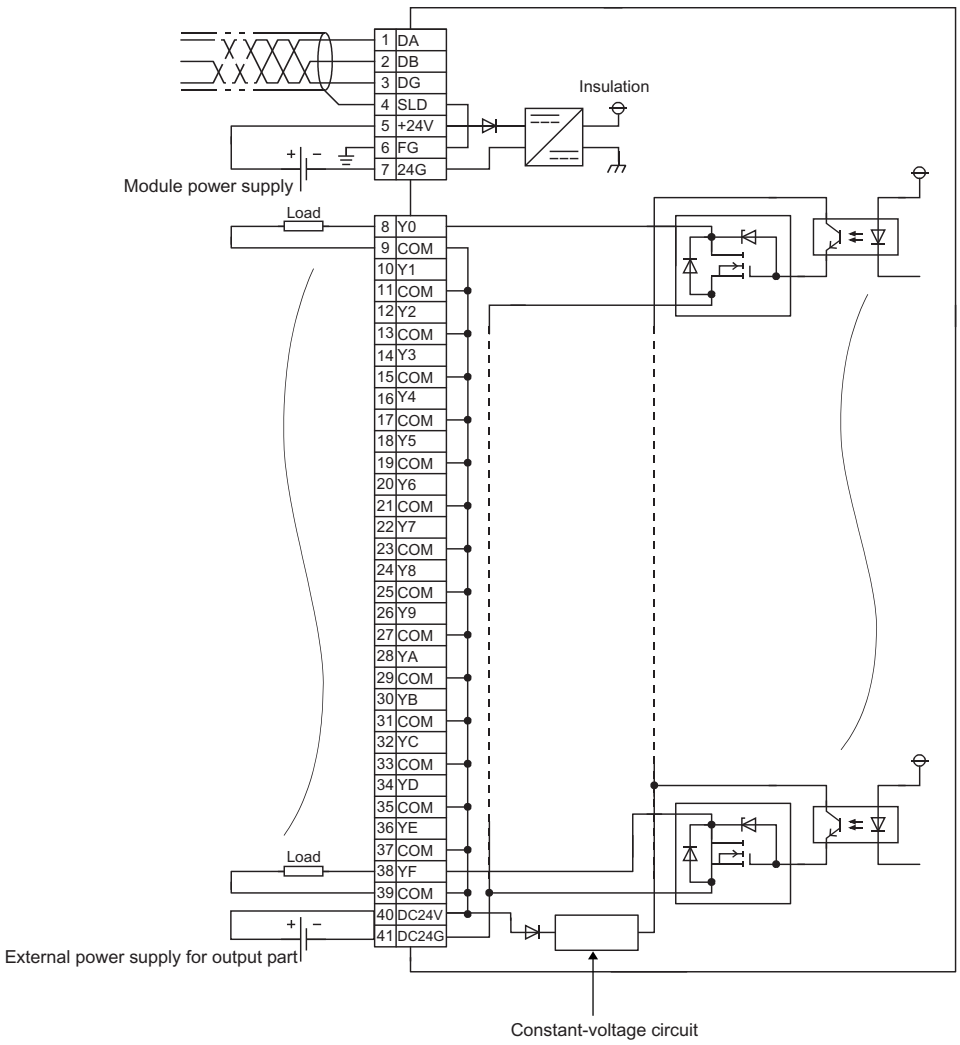

Terminal number	Signal name
TB1	DA
TB2	DB
TB3	DG
TB4	SLD
TB5	+24V
TB6	⏚ (FG)
TB7	24G
TB8	Y0
TB9	COM
TB10	Y1
TB11	COM
TB12	Y2
TB13	COM
TB14	Y3
TB15	COM
TB16	Y4
TB17	COM
TB18	Y5
TB19	COM
TB20	Y6
TB21	COM
TB22	Y7
TB23	COM
TB24	Y8
TB25	COM
TB26	Y9
TB27	COM
TB28	YA
TB29	COM
TB30	YB
TB31	COM
TB32	YC
TB33	COM
TB34	YD
TB35	COM
TB36	YE
TB37	COM
TB38	YF
TB39	COM
TB40	DC24V
TB41	DC24G

5 - 14

AbN
automation

5.1.8 AJ65SBTB2-16T1 transistor output module (sink type)

Item \ Type			Transistor output module	
			AJ65SBTB2-16T1	Appearance
Number of output points			16 points	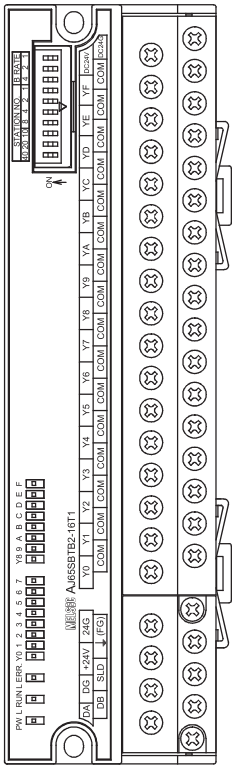
Isolation method			Photocoupler	
Rated load voltage			12/24VDC (ripple ratio: within 5%)	
Operating load voltage range			10.2 to 26.4VDC	
Max. load current			0.5A/point, 3.6A/common	
Max. inrush current			1.0A, 10ms or less	
Leakage current at OFF			0.1mA or lower	
Max. voltage drop at ON			0.3VDC or lower (TYP.) 0.5A, 0.6VDC or lower (MAX.) 0.5A	
Output type			Sink type	
Protection function			None	
Response time		OFF→ON	0.5ms or less	
		ON→OFF	1.5ms or less (resistive load)	
External power supply for output part		Voltage	12/24VDC (ripple ratio: within 5%) (allowable voltage range: 10.2 to 26.4VDC)	
		Current	24.2mA or lower (TYP. 24VDC/common), excluding external load current	
Surge suppressor			Zener diode	
Wiring method for common			16 points/common (2-wire, terminal block type)	
Number of occupied stations			32-point assignment/station (16 points used)	
Module power supply		Voltage	24VDC (ripple ratio: within 5%) (allowable voltage range: 20.4 to 26.4VDC)	
		Current	55mA or lower (at 24VDC and all points ON)	
Noise immunity			Noise voltage 500Vp-p, noise width 1μs, noise frequency 25 to 60Hz (DC type noise simulator condition)	
Withstand voltage			500VAC for 1 minute between all DC external terminals and ground	
Insulation resistance			10MΩ or higher between all DC external terminals and ground (500VDC insulation resistance tester)	
Protection degree			IP2X	
Weight			0.25kg	
External connection system	Communication part, module power supply part		7-point two-piece terminal block [Transmission circuit, module power supply, FG] M3×5.2 screw (tightening torque range: 0.59 to 0.88N•m) Applicable solderless terminal: 2 or less	
	I/O power supply part, I/O part		34-point direct-mount terminal block [I/O power supply, I/O signal] M3×5.2 screw (tightening torque range: 0.59 to 0.88N•m) Applicable solderless terminal: 2 or less	
Module mounting screw			M4 screw with plain washer finished round (tightening torque range: 0.78 to 1.08N•m) Mountable with a DIN rail in 6 orientations	
Applicable DIN rail			TH35-7.5Fe, TH35-7.5Al (compliant with IEC 60715 and JIS C 2812)	
Applicable solderless terminal			• RAV1.25-3 (compliant with JIS C 2805) [Applicable wire size: 0.3 to 1.25mm^2 (22 to 16 AWG) stranded wire] • V2-MS3, RAP2-3SL, TGV2-3N [Applicable wire size: 1.25 to 2.0mm^2 (16 to 14 AWG) stranded wire]	
Wire	Material		Copper	
	Temperature rating		75°C or more	
Accessory			User's manual	

* For applicable solderless terminals connected to the terminal block, refer to the table above. Use applicable wires for the solderless terminals and fix them with an appropriate tightening torque. Use UL listed solderless terminals and, for crimping, use a tool recommended by their manufacturer.

5 - 15

External connection

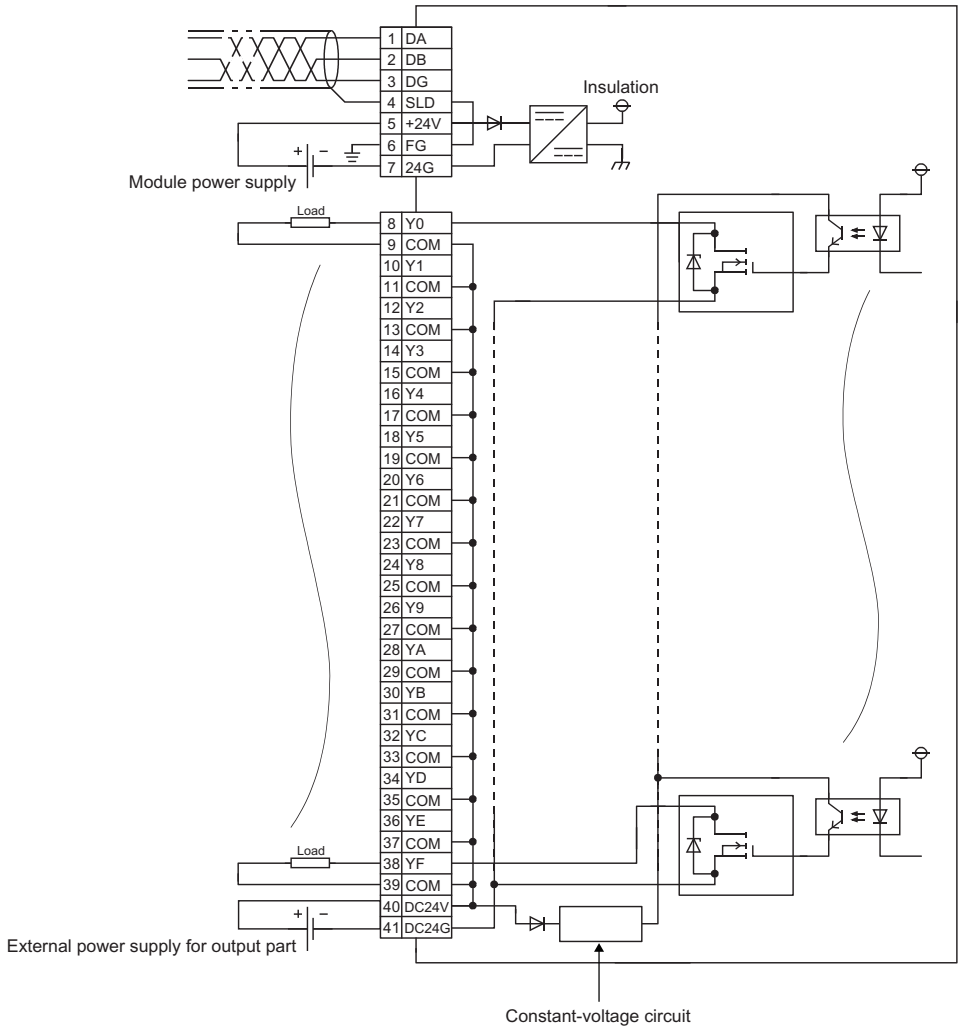

Terminal number	Signal name
TB1	DA
TB2	DB
TB3	DG
TB4	SLD
TB5	+24V
TB6	⏚ (FG)
TB7	24G
TB8	Y0
TB9	COM
TB10	Y1
TB11	COM
TB12	Y2
TB13	COM
TB14	Y3
TB15	COM
TB16	Y4
TB17	COM
TB18	Y5
TB19	COM
TB20	Y6
TB21	COM
TB22	Y7
TB23	COM
TB24	Y8
TB25	COM
TB26	Y9
TB27	COM
TB28	YA
TB29	COM
TB30	YB
TB31	COM
TB32	YC
TB33	COM
TB34	YD
TB35	COM
TB36	YE
TB37	COM
TB38	YF
TB39	COM
TB40	DC24V
TB41	DC24G

5 - 16

AbN
automation

5.1.9 AJ65SBTB1-32T transistor output module (sink type)

Item \ Type		Transistor output module	
		AJ65SBTB1-32T	Appearance
Number of output points		32 points	
Isolation method		Photocoupler	
Rated load voltage		12/24VDC (ripple ratio: within 5%)	
Operating load voltage range		10.2 to 26.4VDC	
Max. load current		0.5A/point, 4.8A/common	
Max. inrush current		1.0A, 10ms or less	
Leakage current at OFF		0.25mA or lower	
Max. voltage drop at ON		0.3VDC or lower (TYP.) 0.5A, 0.6VDC or lower (MAX.) 0.5A	
Output type		Sink type	
Protection function		Overload protection, overvoltage protection, overheat protection	
Response time	OFF→ON	0.5ms or less	
	ON→OFF	1.5ms or less (resistive load)	
External power supply for output part	Voltage	12/24VDC (ripple ratio: within 5%) (allowable voltage range: 10.2 to 26.4VDC)	
	Current	50mA or lower (TYP. 24VDC/common), excluding external load current	
Surge suppressor		Zener diode	
Wiring method for common		32 points/common (1-wire, terminal block type)	
Number of occupied stations		32-point assignment/station (32 points used)	
Module power supply	Voltage	24VDC (ripple ratio: within 5%) (allowable voltage range: 20.4 to 26.4VDC)	
	Current	65mA or lower (at 24VDC and all points ON)	
Noise immunity		Noise voltage 500Vp-p, noise width 1μs, noise frequency 25 to 60Hz (DC type noise simulator condition)	
Withstand voltage		500VAC for 1 minute between all DC external terminals and ground	
Insulation resistance		10MΩ or higher between all DC external terminals and ground (500VDC insulation resistance tester)	
Protection degree		IP2X	
Weight		0.25kg	
External connection system	Communication part, module power supply part	7-point two-piece terminal block [Transmission circuit, module power supply, FG] M3×5.2 screw (tightening torque range: 0.59 to 0.88N•m) Applicable solderless terminal: 2 or less	
	I/O power supply part, I/O part	34-point direct-mount terminal block [I/O power supply, I/O signal] M3×5.2 screw (tightening torque range: 0.59 to 0.88N•m) Applicable solderless terminal: 2 or less	
Module mounting screw		M4 screw with plain washer finished round (tightening torque range: 0.78 to 1.08N•m) Mountable with a DIN rail in 6 orientations	
Applicable DIN rail		TH35-7.5Fe, TH35-7.5Al (compliant with IEC 60715 and JIS C 2812)	
Applicable solderless terminal		• RAV1.25-3 (compliant with JIS C 2805) [Applicable wire size: 0.3 to 1.25mm^2 (22 to 16 AWG) stranded wire] • V2-MS3, RAP2-3SL, TGV2-3N [Applicable wire size: 1.25 to 2.0mm^2 (16 to 14 AWG) stranded wire]	
Wire	Material	Copper	
	Temperature rating	75°C or more	
Accessory		User's manual	

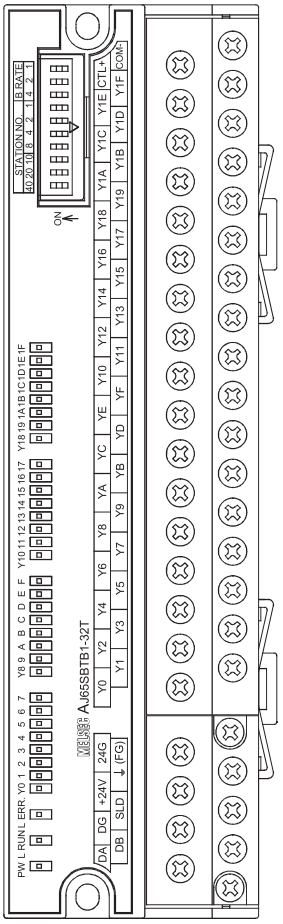

* For applicable solderless terminals connected to the terminal block, refer to the table above. Use applicable wires for the solderless terminals and fix them with an appropriate tightening torque. Use UL listed solderless terminals and, for crimping, use a tool recommended by their manufacturer.

5 - 17

External connection

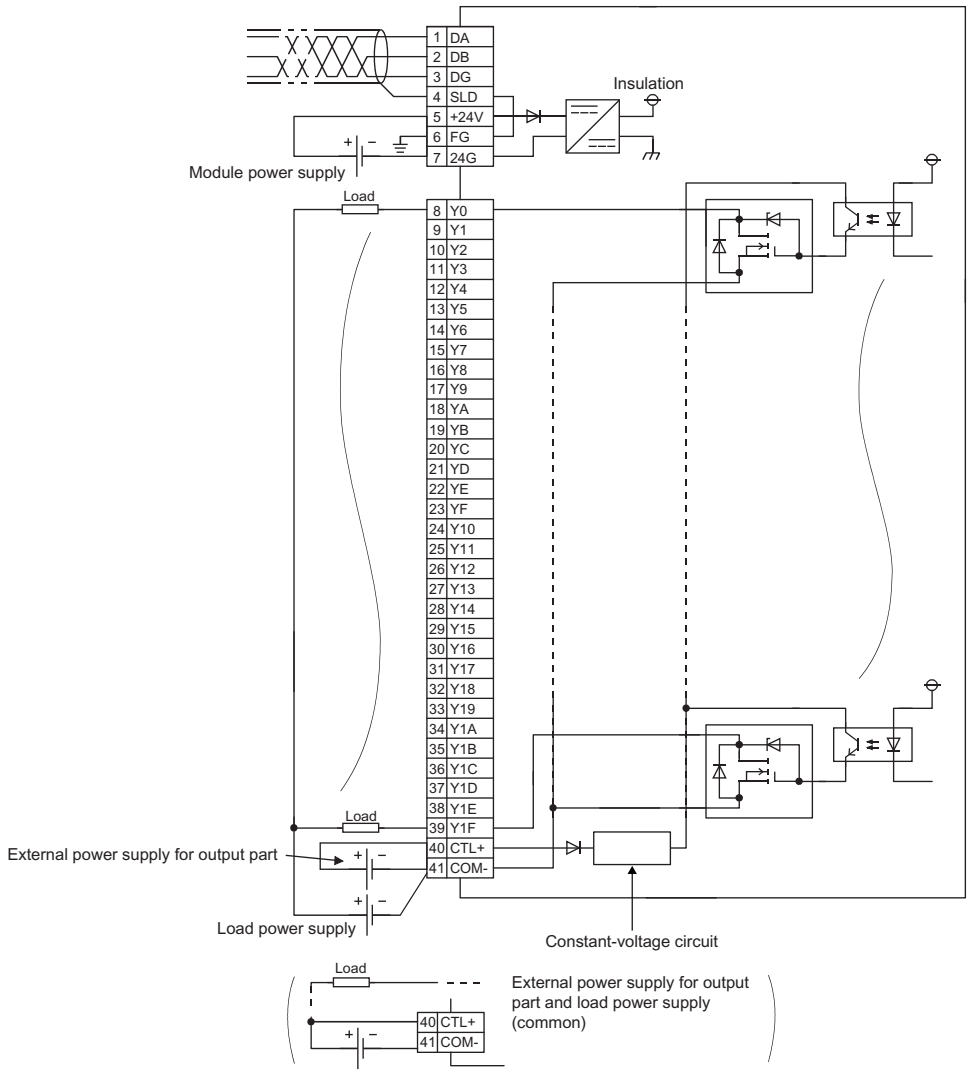

Terminal number	Signal name
TB1	DA
TB2	DB
TB3	DG
TB4	SLD
TB5	+24V
TB6	⏚ (FG)
TB7	24G
TB8	Y0
TB9	Y1
TB10	Y2
TB11	Y3
TB12	Y4
TB13	Y5
TB14	Y6
TB15	Y7
TB16	Y8
TB17	Y9
TB18	YA
TB19	YB
TB20	YC
TB21	YD
TB22	YE
TB23	YF
TB24	Y10
TB25	Y11
TB26	Y12
TB27	Y13
TB28	Y14
TB29	Y15
TB30	Y16
TB31	Y17
TB32	Y18
TB33	Y19
TB34	Y1A
TB35	Y1B
TB36	Y1C
TB37	Y1D
TB38	Y1E
TB39	Y1F
TB40	CTL+
TB41	COM-

AbN
automation

5.1.10 AJ65SBTB1-32T1 transistor output module (sink type)

Item \ Type		Transistor output module	
		AJ65SBTB1-32T1	Appearance
Number of output points		32 points	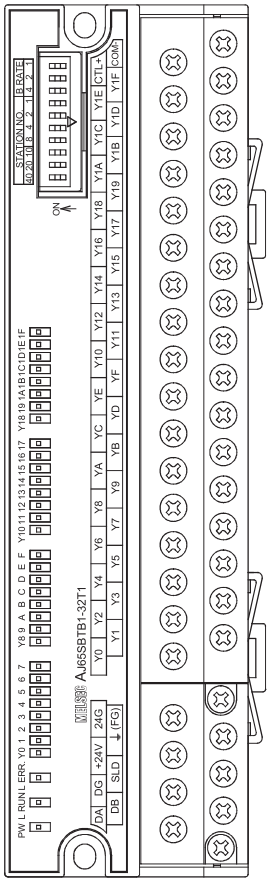
Isolation method		Photocoupler	
Rated load voltage		12/24VDC (ripple ratio: within 5%)	
Operating load voltage range		10.2 to 26.4VDC	
Max. load current		0.5A/point, 4.8A/common	
Max. inrush current		1.0A, 10ms or less	
Leakage current at OFF		0.1mA or lower	
Max. voltage drop at ON		0.3VDC or lower (TYP.) 0.5A, 0.6VDC or lower (MAX.) 0.5A	
Output type		Sink type	
Protection function		None	
Response time	OFF→ON	0.5ms or less	
	ON→OFF	1.5ms or less (resistive load)	
External power supply for output part	Voltage	12/24VDC (ripple ratio: within 5%) (allowable voltage range: 10.2 to 26.4VDC)	
	Current	50mA or lower (TYP. 24VDC/common), excluding external load current	
Surge suppressor		Zener diode	
Wiring method for common		32 points/common (1-wire, terminal block type)	
Number of occupied stations		32-point assignment/station (32 points used)	
Module power supply	Voltage	24VDC (ripple ratio: within 5%) (allowable voltage range: 20.4 to 26.4VDC)	
	Current	65mA or lower (at 24VDC and all points ON)	
Noise immunity		Noise voltage 500Vp-p, noise width 1μs, noise frequency 25 to 60Hz (DC type noise simulator condition)	
Withstand voltage		500VAC for 1 minute between all DC external terminals and ground	
Insulation resistance		10MΩ or higher between all DC external terminals and ground (500VDC insulation resistance tester)	
Protection degree		IP2X	
Weight		0.25kg	
External connection system	Communication part, module power supply part	7-point two-piece terminal block [Transmission circuit, module power supply, FG] M3×5.2 screw (tightening torque range: 0.59 to 0.88N•m) Applicable solderless terminal: 2 or less	
	I/O power supply part, I/O part	34-point direct-mount terminal block [I/O power supply, I/O signal] M3×5.2 screw (tightening torque range: 0.59 to 0.88N•m) Applicable solderless terminal: 2 or less	
Module mounting screw		M4 screw with plain washer finished round (tightening torque range: 0.78 to 1.08N•m) Mountable with a DIN rail in 6 orientations	
Applicable DIN rail		TH35-7.5Fe, TH35-7.5Al (compliant with IEC 60715 and JIS C 2812)	
Applicable solderless terminal		• RAV1.25-3 (compliant with JIS C 2805) [Applicable wire size: 0.3 to 1.25mm^2 (22 to 16 AWG) stranded wire] • V2-MS3, RAP2-3SL, TGV2-3N [Applicable wire size: 1.25 to 2.0mm^2 (16 to 14 AWG) stranded wire]	
Wire	Material	Copper	
	Temperature rating	75°C or more	
Accessory		User's manual	

* For applicable solderless terminals connected to the terminal block, refer to the table above. Use applicable wires for the solderless terminals and fix them with an appropriate tightening torque. Use UL listed solderless terminals and, for crimping, use a tool recommended by their manufacturer.

5 - 19

External connection

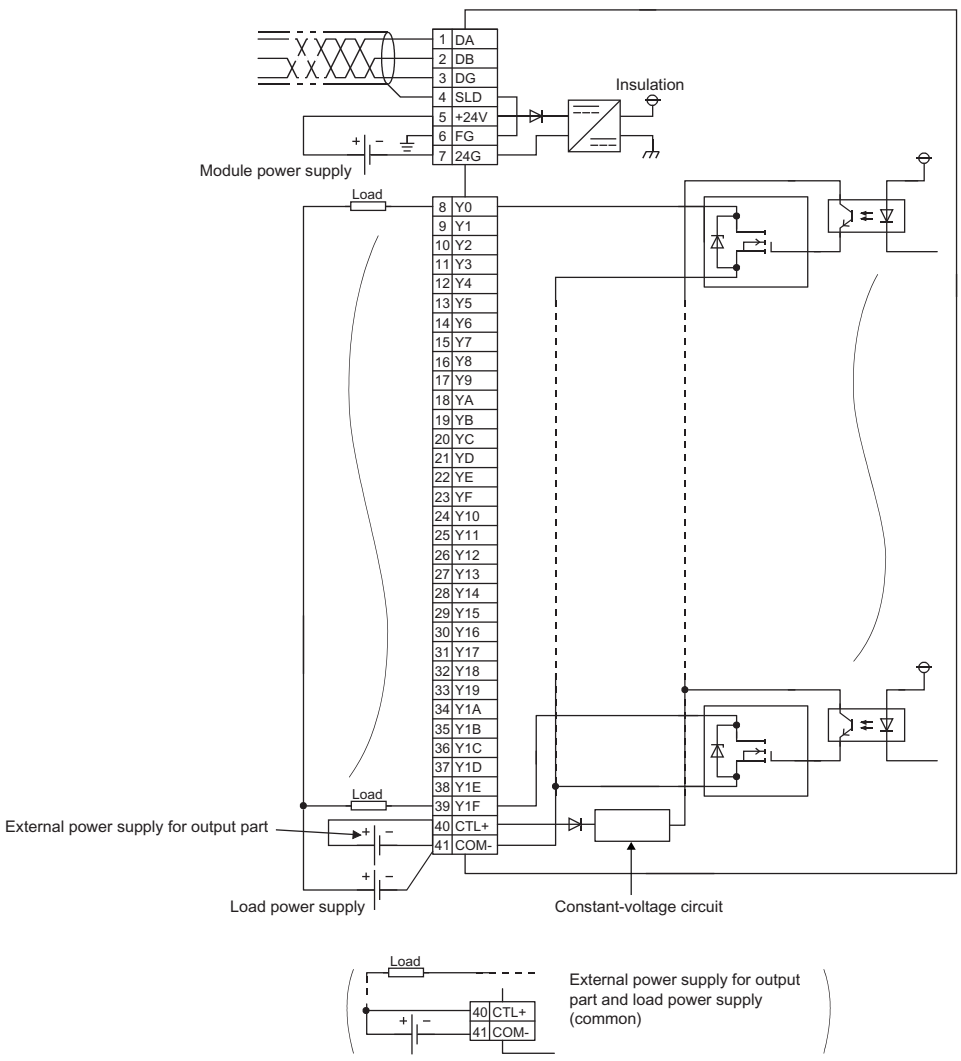

Terminal number	Signal name
TB1	DA
TB2	DB
TB3	DG
TB4	SLD
TB5	+24V
TB6	⏚ (FG)
TB7	24G
TB8	Y0
TB9	Y1
TB10	Y2
TB11	Y3
TB12	Y4
TB13	Y5
TB14	Y6
TB15	Y7
TB16	Y8
TB17	Y9
TB18	YA
TB19	YB
TB20	YC
TB21	YD
TB22	YE
TB23	YF
TB24	Y10
TB25	Y11
TB26	Y12
TB27	Y13
TB28	Y14
TB29	Y15
TB30	Y16
TB31	Y17
TB32	Y18
TB33	Y19
TB34	Y1A
TB35	Y1B
TB36	Y1C
TB37	Y1D
TB38	Y1E
TB39	Y1F
TB40	CTL+
TB41	COM-

5 - 20

AbN
automation

5.1.11 AJ65SBTB1-8TE transistor output module (source type)

Item \ Type		Transistor output module	
		AJ65SBTB1-8TE	Appearance
Number of output points		8 points	
Isolation method		Photocoupler	
Rated load voltage		12/24VDC (ripple ratio: within 5%)	
Operating load voltage range		10.2 to 26.4VDC	
Max. load current		0.1A/point, 0.8A/common	
Max. inrush current		1.0A, 10ms or less	
Leakage current at OFF		0.1mA or lower	
Max. voltage drop at ON		0.1VDC or lower (TYP.) 0.1A, 0.2VDC or lower (MAX.) 0.1A	
Output type		Source type	
Protection function		Overload protection, overheat protection	
Response time	OFF→ON	0.5ms or less	
	ON→OFF	1.5ms or less (resistive load)	
External power supply for output part	Voltage	12/24VDC (ripple ratio: within 5%) (allowable voltage range: 10.2 to 26.4VDC)	
	Current	15mA or lower (TYP. 24VDC/common), excluding external load current	
Surge suppressor		Zener diode	
Wiring method for common		8 points/common (1-wire, terminal block type)	
Number of occupied stations		32-point assignment/station (8 points used)	
Module power supply	Voltage	24VDC (ripple ratio: within 5%) (allowable voltage range: 20.4 to 26.4VDC)	
	Current	35mA or lower (at 24VDC and all points ON)	
Noise immunity		Noise voltage 500Vp-p, noise width 1μs, noise frequency 25 to 60Hz (DC type noise simulator condition)	
Withstand voltage		500VAC for 1 minute between all DC external terminals and ground	
Insulation resistance		10MΩ or higher between all DC external terminals and ground (500VDC insulation resistance tester)	
Weight		0.14kg	
External connection system	Communication part, module power supply part	7-point two-piece terminal block [Transmission circuit, module power supply, FG] M3×5.2 screw (tightening torque range: 0.59 to 0.88N•m) Applicable solderless terminal: 2 or less	
	I/O power supply part, I/O part	10-point direct-mount terminal block [I/O power supply, I/O signal] M3×5.2 screw (tightening torque range: 0.59 to 0.88N•m) Applicable solderless terminal: 2 or less	
Module mounting screw		M4 screw with plain washer finished round (tightening torque range: 0.78 to 1.08N•m) Mountable with a DIN rail in 6 orientations	
Applicable DIN rail		TH35-7.5Fe, TH35-7.5Al (compliant with IEC 60715 and JIS C 2812)	
Applicable solderless terminal		• RAV1.25-3 (compliant with JIS C 2805) [Applicable wire size: 0.3 to 1.25mm^2 (22 to 16 AWG) stranded wire] • V2-MS3, RAP2-3SL, TGV2-3N [Applicable wire size: 1.25 to 2.0mm^2 (16 to 14 AWG) stranded wire]	
Wire	Material	Copper	
	Temperature rating	75°C or more	
Accessory		User's manual	

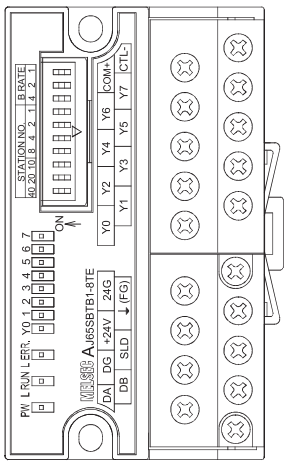

* For applicable solderless terminals connected to the terminal block, refer to the table above. Use applicable wires for the solderless terminals and fix them with an appropriate tightening torque. Use UL listed solderless terminals and, for crimping, use a tool recommended by their manufacturer.

5 - 21

External connection

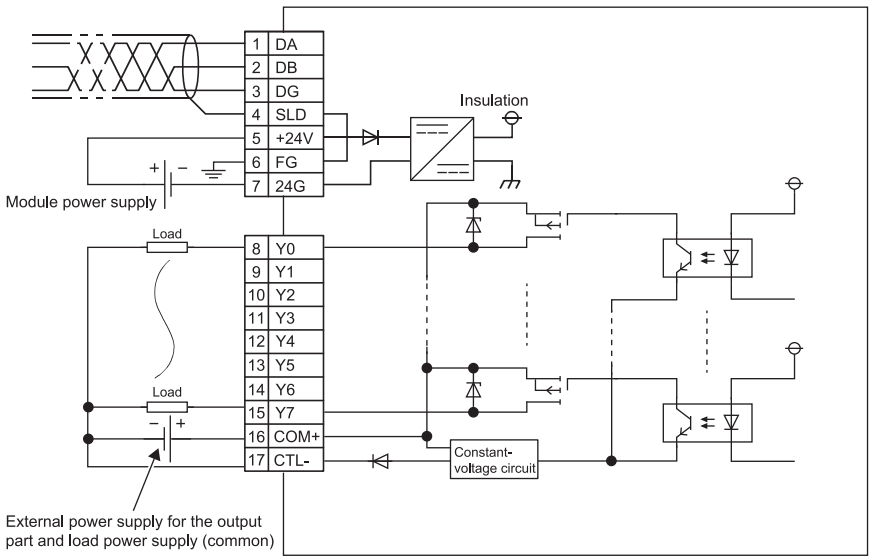

Terminal number	Signal name
TB1	DA
TB2	DB
TB3	DG
TB4	SLD
TB5	+24V
TB6	⏚ (FG)
TB7	24G
TB8	Y0
TB9	Y1
TB10	Y2
TB11	Y3
TB12	Y4
TB13	Y5
TB14	Y6
TB15	Y7
TB16	COM+
TB17	CTL-

5 - 22

AbN
automation

5.1.12 AJ65SBTB1-16TE transistor output module (source type)

Item \ Type			Transistor output module	Appearance
			AJ65SBTB1-16TE	
Number of output points			16 points	
Isolation method			Photocoupler	
Rated load voltage			12/24VDC (ripple ratio: within 5%)	
Operating load voltage range			10.2 to 26.4VDC	
Max. load current			0.1A/point, 1.6A/common	
Max. inrush current			1.0A, 10ms or less	
Leakage current at OFF			0.1mA or lower	
Max. voltage drop at ON			0.1VDC or lower (TYP.) 0.1A, 0.2VDC or lower (MAX.) 0.1A	
Output type			Source type	
Protection function			Overload protection, overheat protection	
Response time		OFF→ON	0.5ms or less	
		ON→OFF	1.5ms or less (resistive load)	
External power supply for output part		Voltage	12/24VDC (ripple ratio: within 5%) (allowable voltage range: 10.2 to 26.4VDC)	
		Current	30mA or lower (TYP. 24VDC/common), excluding external load current	
Surge suppressor			Zener diode	
Wiring method for common			16 points/common (1-wire, terminal block type)	
Number of occupied stations			32-point assignment/station (16 points used)	
Module power supply		Voltage	24VDC (ripple ratio: within 5%) (allowable voltage range: 20.4 to 26.4VDC)	
		Current	50mA or lower (at 24VDC and all points ON)	
Noise immunity			Noise voltage 500Vp-p, noise width 1μs, noise frequency 25 to 60Hz (DC type noise simulator condition)	
Withstand voltage			500VAC for 1 minute between all DC external terminals and ground	
Insulation resistance			10MΩ or higher between all DC external terminals and ground (500VDC insulation resistance tester)	
Weight			0.18kg	
External connection system	Communication part, module power supply part		7-point two-piece terminal block [Transmission circuit, module power supply, FG] M3×5.2 screw (tightening torque range: 0.59 to 0.88N•m) Applicable solderless terminal: 2 or less	
	I/O power supply part, I/O part		18-point direct-mount terminal block [I/O power supply, I/O signal] M3×5.2 screw (tightening torque range: 0.59 to 0.88N•m) Applicable solderless terminal: 2 or less	
Module mounting screw			M4 screw with plain washer finished round (tightening torque range: 0.78 to 1.08N•m) Mountable with a DIN rail in 6 orientations	
Applicable DIN rail			TH35-7.5Fe, TH35-7.5Al (compliant with IEC 60715 and JIS C 2812)	
Applicable solderless terminal			• RAV1.25-3 (compliant with JIS C 2805) [Applicable wire size: 0.3 to 1.25mm^2 (22 to 16 AWG) stranded wire] • V2-MS3, RAP2-3SL, TGV2-3N [Applicable wire size: 1.25 to 2.0mm^2 (16 to 14 AWG) stranded wire]	
Wire	Material		Copper	
	Temperature rating		75°C or more	
Accessory			User's manual	

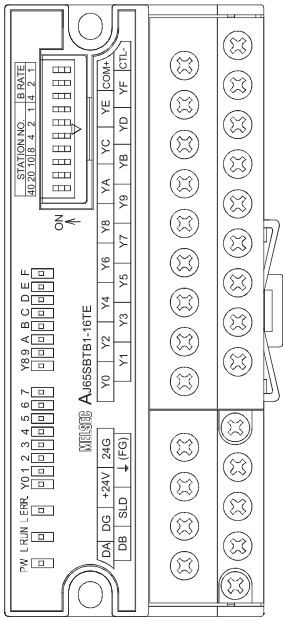

* For applicable solderless terminals connected to the terminal block, refer to the table above. Use applicable wires for the solderless terminals and fix them with an appropriate tightening torque. Use UL listed solderless terminals and, for crimping, use a tool recommended by their manufacturer.

5 - 23

External connection

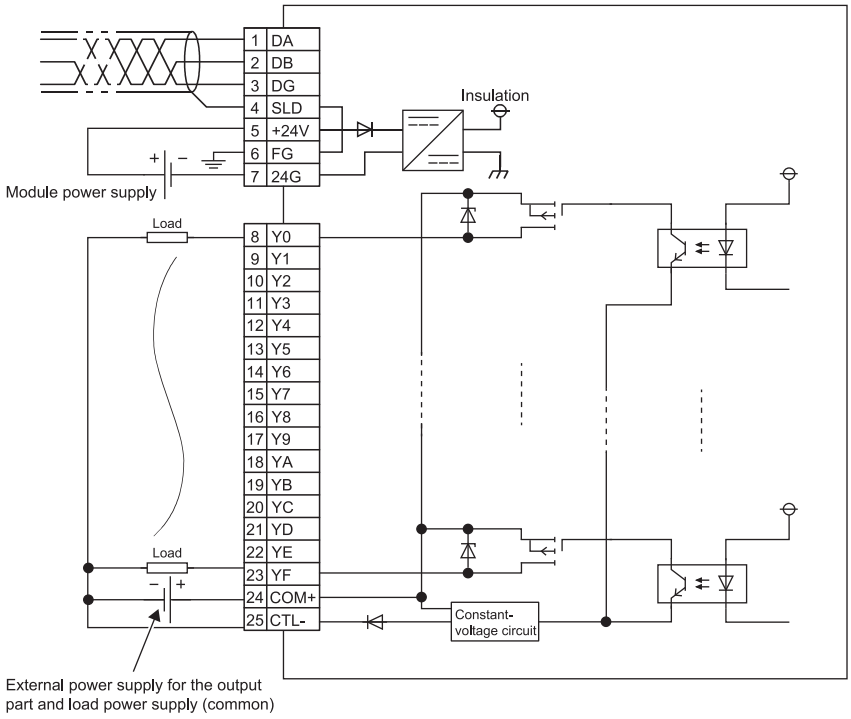

Terminal number	Signal name
TB1	DA
TB2	DB
TB3	DG
TB4	SLD
TB5	+24V
TB6	⏚ (FG)
TB7	24G
TB8	Y0
TB9	Y1
TB10	Y2
TB11	Y3
TB12	Y4
TB13	Y5
TB14	Y6
TB15	Y7
TB16	Y8
TB17	Y9
TB18	YA
TB19	YB
TB20	YC
TB21	YD
TB22	YE
TB23	YF
TB24	COM+
TB25	CTL-

5 - 24

AbN
automation

5.1.13 AJ65SBTB1B-16TE1 transistor output module (source type)

Item \ Type		Transistor output module	
		AJ65SBTB1B-16TE1	Appearance
Number of output points		16 points	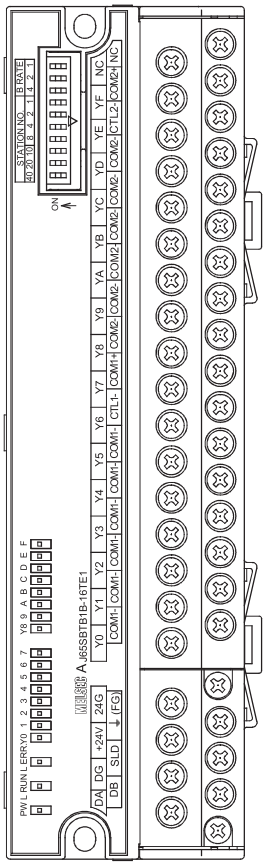
Isolation method		Photocoupler	
Rated load voltage		12/24VDC (ripple ratio: within 5%)	
Operating load voltage range		10.2 to 26.4VDC	
Max. load current		0.5A/point, 4A/common	
Max. inrush current		1.0A, 10ms or less	
Leakage current at OFF		0.1mA or lower	
Max. voltage drop at ON		0.5VDC or lower (TYP.) 0.5A, 0.8VDC or lower (MAX.) 0.5A	
Output type		Source type	
Protection function		None	
Response time	OFF→ON	0.5ms or less	
	ON→OFF	1.5ms or less (resistive load)	
External power supply for output part	Voltage	12/24VDC (ripple ratio: within 5%) (allowable voltage range: 10.2 to 26.4VDC)	
	Current	10mA or lower (TYP. 24VDC/common), excluding external load current	
Surge suppressor		Zener diode	
Wiring method for common		8 points/common (1-wire, terminal block type)	
Number of occupied stations		32-point assignment/station (16 points used)	
Module power supply	Voltage	24VDC (ripple ratio: within 5%) (allowable voltage range: 20.4 to 26.4VDC)	
	Current	45mA or lower (at 24VDC and all points ON)	
Noise immunity		Noise voltage 500Vp-p, noise width 1μs, noise frequency 25 to 60Hz (DC type noise simulator condition)	
Withstand voltage		500VAC for 1 minute between all DC external terminals and ground	
Insulation resistance		10MΩ or higher between all DC external terminals and ground (500VDC insulation resistance tester)	
Protection degree		IP2X	
Weight		0.26kg	
External connection system	Communication part, module power supply part	7-point two-piece terminal block [Transmission circuit, module power supply, FG] M3×5.2 screw (tightening torque range: 0.59 to 0.88N•m) Applicable solderless terminal: 2 or less	
	I/O power supply part, I/O part	34-point direct-mount terminal block [I/O power supply, I/O signal] M3×5.2 screw (tightening torque range: 0.59 to 0.88N•m) Applicable solderless terminal: 2 or less	
Module mounting screw		M4 screw with plain washer finished round (tightening torque range: 0.78 to 1.08N•m) Mountable with a DIN rail in 6 orientations	
Applicable DIN rail		TH35-7.5Fe, TH35-7.5Al (compliant with IEC 60715 and JIS C 2812)	
Applicable solderless terminal		• RAV1.25-3 (compliant with JIS C 2805) [Applicable wire size: 0.3 to 1.25mm^2 (22 to 16 AWG) stranded wire] • V2-MS3, RAP2-3SL, TGV2-3N [Applicable wire size: 1.25 to 2.0mm^2 (16 to 14 AWG) stranded wire]	
Wire	Material	Copper	
	Temperature rating	75°C or more	
Accessory		User's manual	

* For applicable solderless terminals connected to the terminal block, refer to the table above. Use applicable wires for the solderless terminals and fix them with an appropriate tightening torque. Use UL listed solderless terminals and, for crimping, use a tool recommended by their manufacturer.

5 - 25

External connection

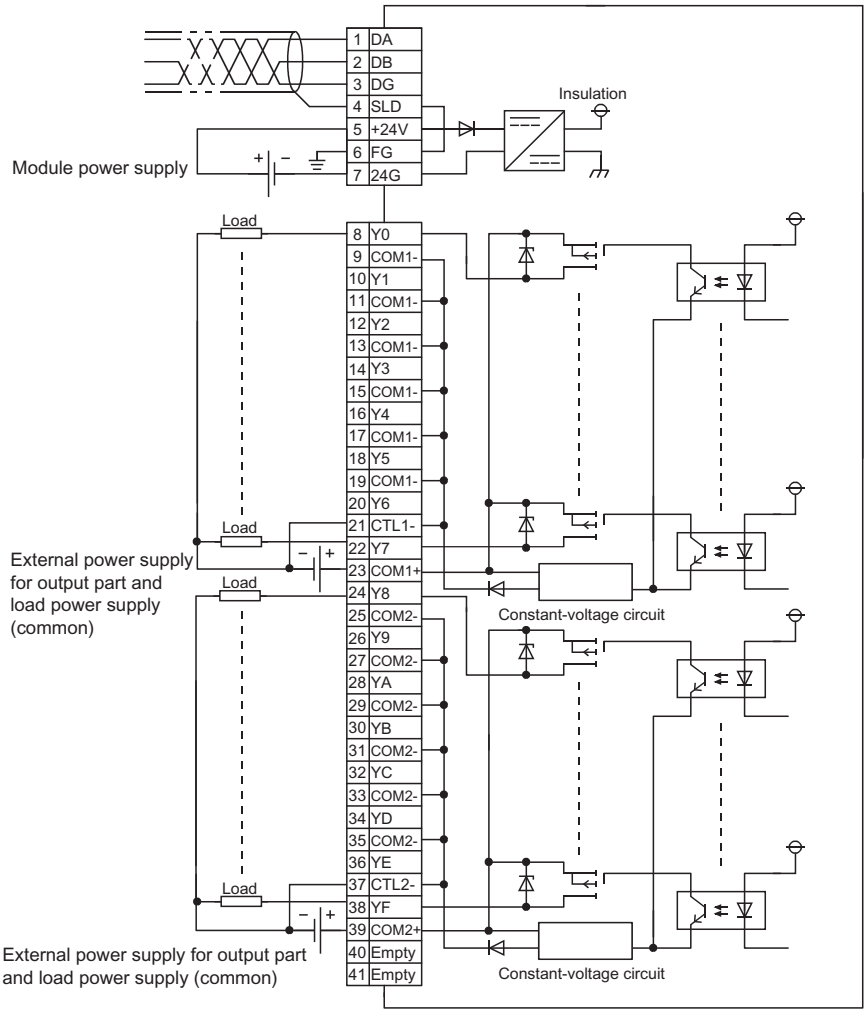

Terminal number	Signal name
TB1	DA
TB2	DB
TB3	DG
TB4	SLD
TB5	+24V
TB6	⏚ (FG)
TB7	24G
TB8	Y0
TB9	COM1-
TB10	Y1
TB11	COM1-
TB12	Y2
TB13	COM1-
TB14	Y3
TB15	COM1-
TB16	Y4
TB17	COM1-
TB18	Y5
TB19	COM1-
TB20	Y6
TB21	CTL1-
TB22	Y7
TB23	COM1+
TB24	Y8
TB25	COM2-
TB26	Y9
TB27	COM2-
TB28	YA
TB29	COM2-
TB30	YB
TB31	COM2-
TB32	YC
TB33	COM2-
TB34	YD
TB35	COM2-
TB36	YE
TB37	CTL2-
TB38	YF
TB39	COM2+
TB40	Empty
TB41	Empty

5 - 26

AbN
automation

5.1.14 AJ65SBTB1-32TE1 transistor output module (source type)

Item \ Type			Transistor output module AJ65SBTB1-32TE1	Appearance
Number of output points			32 points	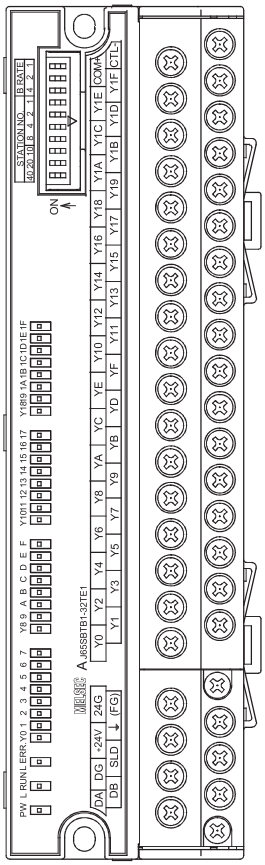
Isolation method			Photocoupler	
Rated load voltage			12/24VDC (ripple ratio: within 5%)	
Operating load voltage range			10.2 to 26.4VDC	
Max. load current			0.5A/point, 4.8A/common	
Max. inrush current			1.0A, 10ms or less	
Leakage current at OFF			0.1mA or lower	
Max. voltage drop at ON			0.5VDC or lower (TYP.) 0.5A, 0.8VDC or lower (MAX.) 0.5A	
Output type			Source type	
Protection function			None	
Response time		OFF→ON	0.5ms or less	
		ON→OFF	1.5ms or less (resistive load)	
External power supply for output part		Voltage	12/24VDC (ripple ratio: within 5%) (allowable voltage range: 10.2 to 26.4VDC)	
		Current	15mA or lower (TYP. 24VDC/common), excluding external load current	
Surge suppressor			Zener diode	
Wiring method for common			32 points/common (1-wire, terminal block type)	
Number of occupied stations			32-point assignment/station (32 points used)	
Module power supply		Voltage	24VDC (ripple ratio: within 5%) (allowable voltage range: 20.4 to 26.4VDC)	
		Current	60mA or lower (at 24VDC and all points ON)	
Noise immunity			Noise voltage 500Vp-p, noise width 1μs, noise frequency 25 to 60Hz (DC type noise simulator condition)	
Withstand voltage			500VAC for 1 minute between all DC external terminals and ground	
Insulation resistance			10MΩ or higher between all DC external terminals and ground (500VDC insulation resistance tester)	
Protection degree			IP2X	
Weight			0.26kg	
External connection system	Communication part, module power supply part		7-point two-piece terminal block [Transmission circuit, module power supply, FG] M3×5.2 screw (tightening torque range: 0.59 to 0.88N•m) Applicable solderless terminal: 2 or less	
	I/O power supply part, I/O part		34-point direct-mount terminal block [I/O power supply, I/O signal] M3×5.2 screw (tightening torque range: 0.59 to 0.88N•m) Applicable solderless terminal: 2 or less	
Module mounting screw			M4 screw with plain washer finished round (tightening torque range: 0.78 to 1.08N•m) Mountable with a DIN rail in 6 orientations	
Applicable DIN rail			TH35-7.5Fe, TH35-7.5Al (compliant with IEC 60715 and JIS C 2812)	
Applicable solderless terminal			• RAV1.25-3 (compliant with JIS C 2805) [Applicable wire size: 0.3 to 1.25mm^2 (22 to 16 AWG) stranded wire] • V2-MS3, RAP2-3SL, TGV2-3N [Applicable wire size: 1.25 to 2.0mm^2 (16 to 14 AWG) stranded wire]	
Wire	Material		Copper	
	Temperature rating		75°C or more	
Accessory			User's manual	

* For applicable solderless terminals connected to the terminal block, refer to the table above. Use applicable wires for the solderless terminals and fix them with an appropriate tightening torque. Use UL listed solderless terminals and, for crimping, use a tool recommended by their manufacturer.

5 - 27

External connection

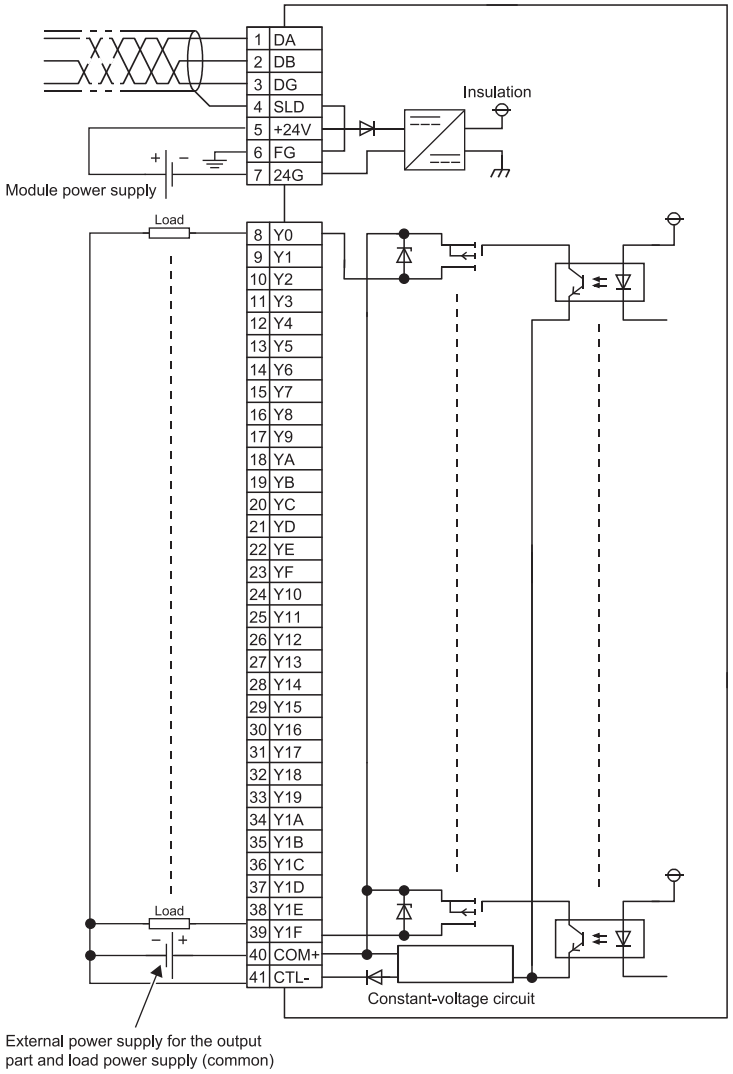

Terminal number	Signal name
TB1	DA
TB2	DB
TB3	DG
TB4	SLD
TB5	+24V
TB6	⏚ (FG)
TB7	24G
TB8	Y0
TB9	Y1
TB10	Y2
TB11	Y3
TB12	Y4
TB13	Y5
TB14	Y6
TB15	Y7
TB16	Y8
TB17	Y9
TB18	YA
TB19	YB
TB20	YC
TB21	YD
TB22	YE
TB23	YF
TB24	Y10
TB25	Y11
TB26	Y12
TB27	Y13
TB28	Y14
TB29	Y15
TB30	Y16
TB31	Y17
TB32	Y18
TB33	Y19
TB34	Y1A
TB35	Y1B
TB36	Y1C
TB37	Y1D
TB38	Y1E
TB39	Y1F
TB40	COM+
TB41	CTL-

5 - 28

5.1.15 AJ65SBTB2N-8R contact output module

Item \ Type			Contact output module	
			AJ65SBTB2N-8R	Appearance
Number of output points			8 points	
Isolation method			Relay	
Rated load voltage/current			2A/point, 4A/common at 24VDC (resistive load) or 240VAC (cosϕ=1)	
Min. switching load			5VDC, 1mA	
Max. switching voltage			264VAC, 125VDC	
Response time		OFF→ON	10ms or less	
		ON→OFF	12ms or less	
Life		Mechanical	20 million times or more	
		Electrical	Rated switching voltage/current load: 100 thousand times or more	
			200VAC 1.5A, 240VAC 1A (cosϕ=0.7): 100 thousand times or more	
			200VAC 1A, 240VAC 0.5A (cosϕ=0.35): 100 thousand times or more	
			24VDC 1A, 100VDC 0.1A (L/R=7ms): 100 thousand times or more	
Max. switching frequency			3600 times/hour	
Surge suppressor			None	
Wiring method for common			8 points/common (2-wire, terminal block type)	
Number of occupied stations			32-point assignment/station (8 points used)	
Module power supply		Voltage	24VDC (ripple ratio: within 5%) (allowable voltage range: 20.4 to 26.4VDC)	
		Current	85mA or lower (at 24VDC and all points ON)	
Noise immunity			Noise voltage: 1500Vp-p (AC type), 500Vp-p (DC type), noise width 1μs, noise frequency 25 to 60Hz (noise simulator condition) Fast transient/burst immunity test IEC61000-4-4:1kV	
Withstand voltage			2830VACrms for 3 cycles between all AC external terminals and ground (2000m above sea level) 500VAC for 1 minute between all DC external terminals and ground	
Insulation resistance			10MΩ or higher between all AC external terminals and ground (500VDC insulation resistance tester) 10MΩ or higher between all DC external terminals and ground (500VDC insulation resistance tester)	
Weight			0.25kg	
External connection system	Communication part, module power supply part		7-point two-piece terminal block [Transmission circuit, module power supply, FG] M3×5.2 screw (tightening torque range: 0.59 to 0.88N•m) Applicable solderless terminal: 2 or less	
	I/O power supply part, I/O part		18-point direct-mount terminal block [I/O power supply, I/O signal] M3×5.2 screw (tightening torque range: 0.59 to 0.88N•m) Applicable solderless terminal: 2 or less	
Module mounting screw			M4 screw with plain washer finished round (tightening torque range: 0.78 to 1.08N•m) Mountable with a DIN rail in 6 orientations	
Applicable DIN rail			TH35-7.5Fe, TH35-7.5Al (compliant with IEC 60715 and JIS C 2812)	
Applicable solderless terminal			• RAV1.25-3 (compliant with JIS C 2805) [Applicable wire size: 0.3 to 1.25mm^2 (22 to 16 AWG) stranded wire] • V2-MS3, RAP2-3SL, TGV2-3N [Applicable wire size: 1.25 to 2.0mm^2 (16 to 14 AWG) stranded wire]	
Wire	Material		Copper	
	Temperature rating		75°C or more	
Accessory			User's manual	

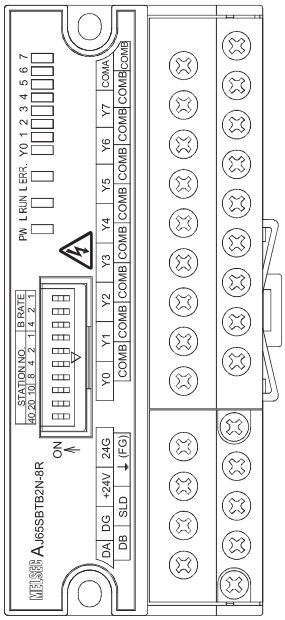

* For applicable solderless terminals connected to the terminal block, refer to the table above. Use applicable wires for the solderless terminals and fix them with an appropriate tightening torque. Use UL listed solderless terminals and, for crimping, use a tool recommended by their manufacturer.

External connection

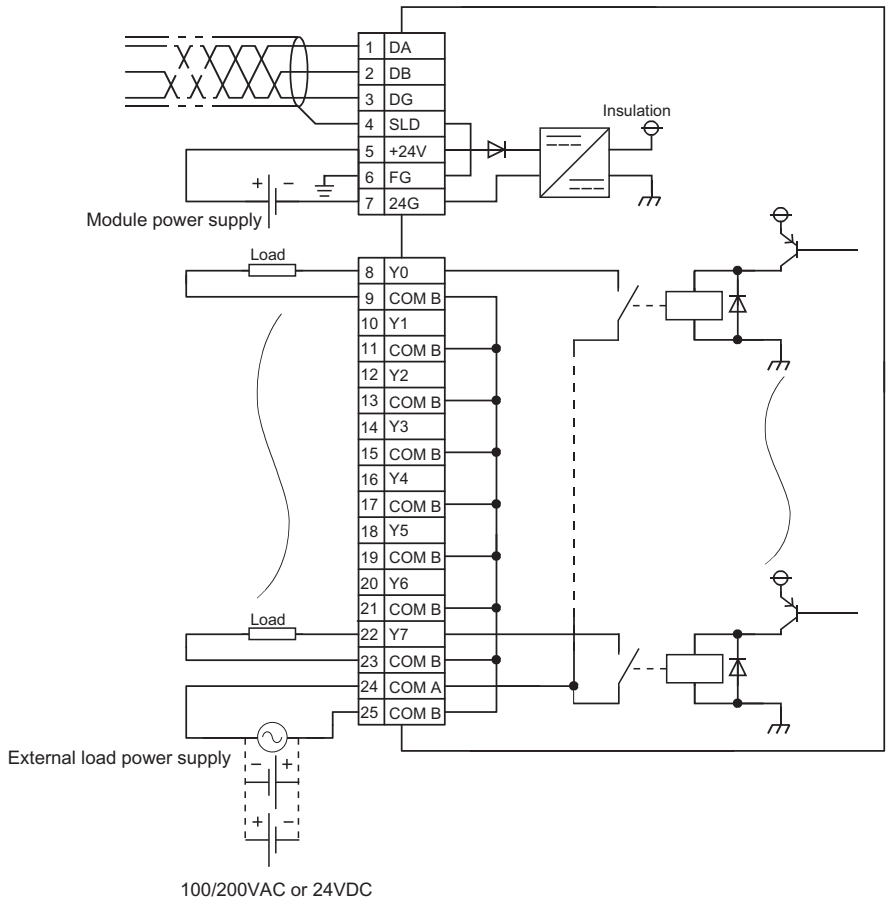

Terminal number	Signal name
TB1	DA
TB2	DB
TB3	DG
TB4	SLD
TB5	+24V
TB6	⏚ (FG)
TB7	24G
TB8	Y0
TB9	COM B
TB10	Y1
TB11	COM B
TB12	Y2
TB13	COM B
TB14	Y3
TB15	COM B
TB16	Y4
TB17	COM B
TB18	Y5
TB19	COM B
TB20	Y6
TB21	COM B
TB22	Y7
TB23	COM B
TB24	COM A
TB25	COM B

All COM B terminals are connected inside the module (shared common).

5 - 30

AbN
automation

5.1.16 AJ65SBTB2N-16R contact output module

Item \ Type			Contact output module AJ65SBTB2N-16R	Appearance
Number of output points			16 points	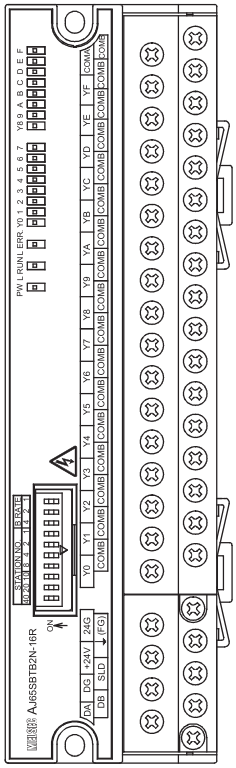
Isolation method			Relay	
Rated load voltage/current			2A/point, 8A/common at 24VDC (resistive load) or 240VAC (cosϕ=1)	
Min. switching load			5VDC, 1mA	
Max. switching voltage			264VAC, 125VDC	
Response time		OFF→ON	10ms or less	
		ON→OFF	12ms or less	
Life		Mechanical	20 million times or more	
		Electrical	Rated switching voltage/current load: 100 thousand times or more	
			200VAC 1.5A, 240VAC 1A (cosϕ=0.7): 100 thousand times or more	
			200VAC 1A, 240VAC 0.5A (cosϕ=0.35): 100 thousand times or more	
			24VDC 1A, 100VDC 0.1A (L/R=7ms): 100 thousand times or more	
Max. switching frequency			3600 times/hour	
Surge suppressor			None	
Wiring method for common			16 points/common (2-wire, terminal block type)	
Number of occupied stations			32-point assignment/station (16 points used)	
Module power supply		Voltage	24VDC (ripple ratio: within 5%) (allowable voltage range: 20.4 to 26.4VDC)	
		Current	120mA or lower (at 24VDC and all points ON)	
Noise immunity			Noise voltage: 1500Vp-p (AC type), 500Vp-p (DC type), noise width 1μs, noise frequency 25 to 60Hz (noise simulator condition) Fast transient/burst immunity test IEC 61000-4-4:1kV	
Withstand voltage			2830VACrms for 3 cycles between all AC external terminals and ground (2000m above sea level) 500VAC for 1 minute between all DC external terminals and ground	
Insulation resistance			10MΩ or higher between all AC external terminals and ground (500VDC insulation resistance tester) 10MΩ or higher between all DC external terminals and ground (500VDC insulation resistance tester)	
Weight			0.35kg	
External connection system	Communication part, module power supply part		7-point two-piece terminal block [Transmission circuit, module power supply, FG] M3×5.2 screw (tightening torque range: 0.59 to 0.88N•m) Applicable solderless terminal: 2 or less	
	I/O power supply part, I/O part		34-point direct-mount terminal block [I/O power supply, I/O signal] M3×5.2 screw (tightening torque range: 0.59 to 0.88N•m) Applicable solderless terminal: 2 or less	
Module mounting screw			M4 screw with plain washer finished round (tightening torque range: 0.78 to 1.08N•m) Mountable with a DIN rail in 6 orientations	
Applicable DIN rail			TH35-7.5Fe, TH35-7.5Al (compliant with IEC 60715 and JIS C 2812)	
Applicable solderless terminal			• RAV1.25-3 (compliant with JIS C 2805) [Applicable wire size: 0.3 to 1.25mm^2 (22 to 16 AWG) stranded wire] • V2-MS3, RAP2-3SL, TGV2-3N [Applicable wire size: 1.25 to 2.0mm^2 (16 to 14 AWG) stranded wire]	
Wire	Material		Copper	
	Temperature rating		75°C or more	
Accessory			User's manual	

* For applicable solderless terminals connected to the terminal block, refer to the table above. Use applicable wires for the solderless terminals and fix them with an appropriate tightening torque. Use UL listed solderless terminals and, for crimping, use a tool recommended by their manufacturer.

5 - 31

External connection

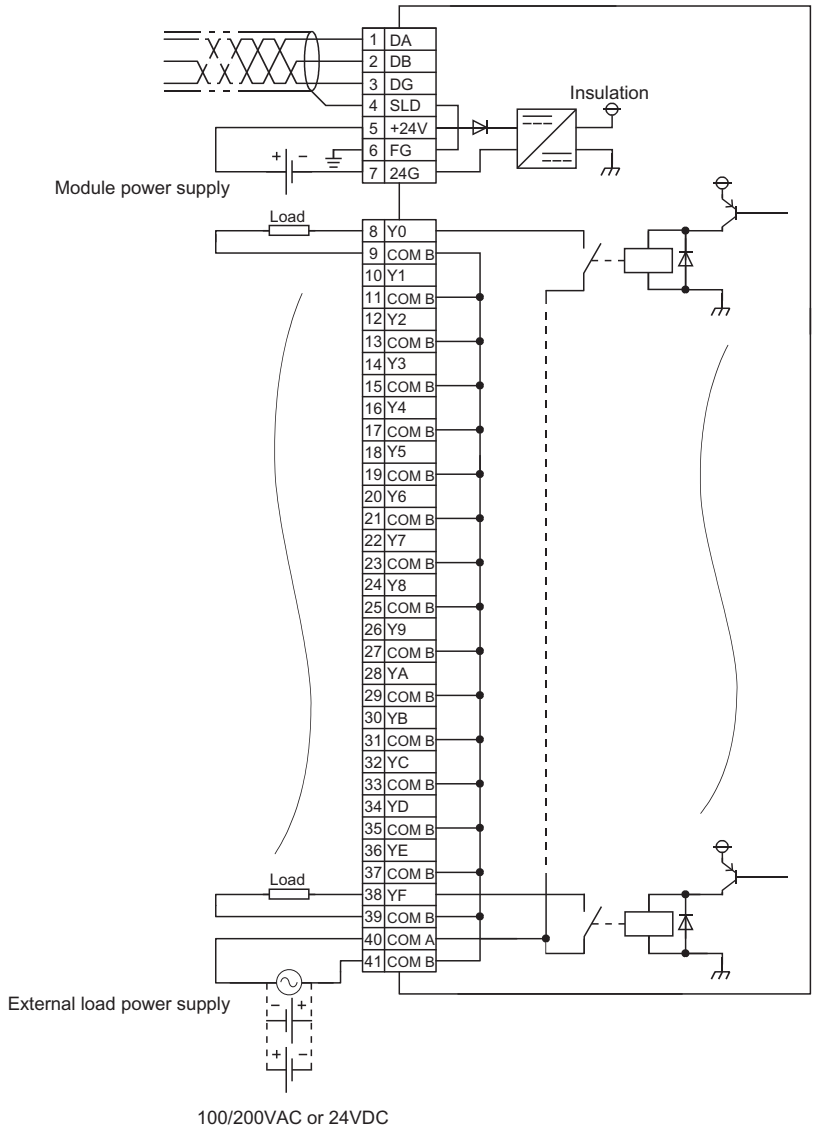

Terminal number	Signal name
TB1	DA
TB2	DB
TB3	DG
TB4	SLD
TB5	+24V
TB6	⏚ (FG)
TB7	24G
TB8	Y0
TB9	COM B
TB10	Y1
TB11	COM B
TB12	Y2
TB13	COM B
TB14	Y3
TB15	COM B
TB16	Y4
TB17	COM B
TB18	Y5
TB19	COM B
TB20	Y6
TB21	COM B
TB22	Y7
TB23	COM B
TB24	Y8
TB25	COM B
TB26	Y9
TB27	COM B
TB28	YA
TB29	COM B
TB30	YB
TB31	COM B
TB32	YC
TB33	COM B
TB34	YD
TB35	COM B
TB36	YE
TB37	COM B
TB38	YF
TB39	COM B
TB40	COM A
TB41	COM B

All COM B terminals are connected inside the module (shared common).

5 - 32

AbN
automation

5.1.17 AJ65SBTB2N-8S triac output module

Item \ Type		Triac output module	
		AJ65SBTB2N-8S	Appearance
Number of output points		8 points	
Isolation method		Photocoupler	
Rated load voltage		100 to 240VAC, 50/60Hz ±5%	
Load voltage distortion ratio		Within 5%	
Max. load voltage		264VAC	
Max. load current		0.6A/point, 2.4A/common	
Min. load voltage/current		50VAC 100mA, 100VAC 10mA, 240VAC 10mA	
Max. inrush current		25A, 10ms or less	
Leakage current at OFF		1.5mArms or lower (at 100VACrms, 60Hz), 3mArms or lower (at 200VACrms, 60Hz)	
Max. voltage drop at ON		1.5VACrms or lower (at 0.6A)	
Response time	OFF→ON	1ms or less	
	ON→OFF	Total of 1ms and 0.5 cycles or less	
Surge suppressor		CR absorber (0.01μF + 47Ω)	
Wiring method for common		8 points/common (2-wire, terminal block type)	
Number of occupied stations		32-point assignment/station (8 points used)	
Module power supply	Voltage	24VDC (ripple ratio: within 5%) (allowable voltage range: 20.4 to 26.4VDC)	
	Current	55mA or lower (at 24VDC and all points ON)	
Noise immunity		Noise voltage: 1500Vp-p (AC type), 500Vp-p (DC type), noise width 1μs, noise frequency 25 to 60Hz (noise simulator condition) Fast transient/burst immunity test IEC61000-4-4:1kV	
Withstand voltage		2830VACrms for 3 cycles between all AC external terminals and ground (2000m above sea level) 500VAC for 1 minute between all DC external terminals and ground	
Insulation resistance		10MΩ or higher between all AC external terminals and ground (500VDC insulation resistance tester) 10MΩ or higher between all DC external terminals and ground (500VDC insulation resistance tester)	
Weight		0.25kg	
External connection system	Communication part, module power supply part	7-point two-piece terminal block [Transmission circuit, module power supply, FG] M3×5.2 screw (tightening torque range: 0.59 to 0.88N•m) Applicable solderless terminal: 2 or less	
	I/O power supply part, I/O part	18-point direct-mount terminal block [I/O power supply, I/O signal] M3×5.2 screw (tightening torque range: 0.59 to 0.88N•m) Applicable solderless terminal: 2 or less	
Module mounting screw		M4 screw with plain washer finished round (tightening torque range: 0.78 to 1.08N•m) Mountable with a DIN rail in 6 orientations	
Applicable DIN rail		TH35-7.5Fe, TH35-7.5Al (compliant with IEC 60715 and JIS C 2812)	
Applicable solderless terminal		• RAV1.25-3 (compliant with JIS C 2805) [Applicable wire size: 0.3 to 1.25mm^2 (22 to 16 AWG) stranded wire] • V2-MS3, RAP2-3SL, TGV2-3N [Applicable wire size: 1.25 to 2.0mm^2 (16 to 14 AWG) stranded wire]	
Wire	Material	Copper	
	Temperature rating	75°C or more	
Accessory		User's manual	

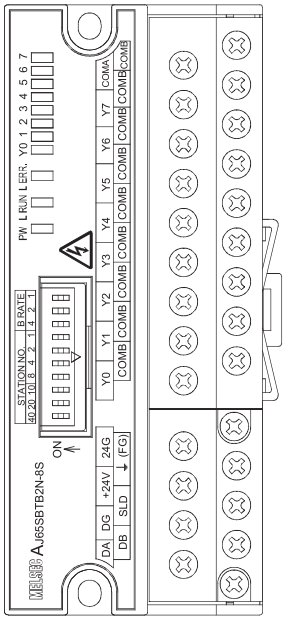

* For applicable solderless terminals connected to the terminal block, refer to the table above. Use applicable wires for the solderless terminals and fix them with an appropriate tightening torque. Use UL listed solderless terminals and, for crimping, use a tool recommended by their manufacturer.

5 - 33

External connection

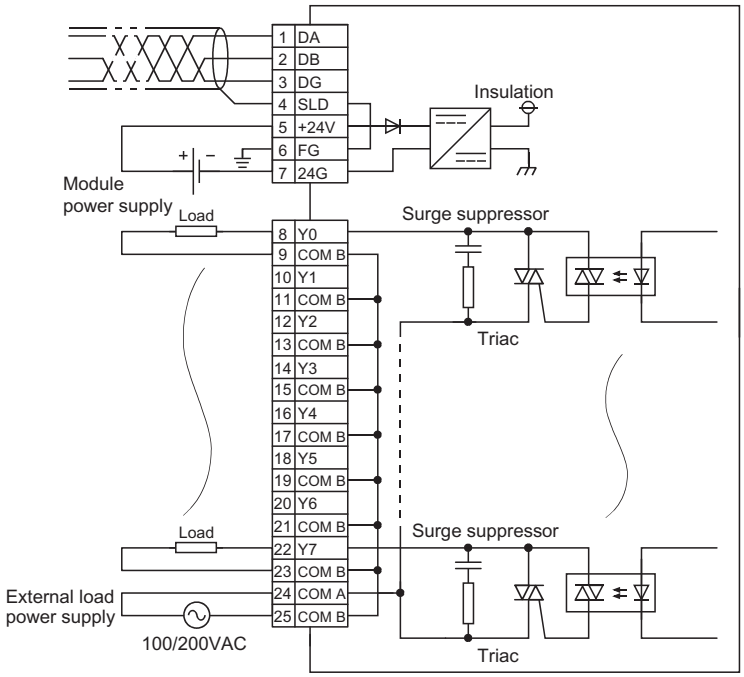

Terminal number	Signal name
TB1	DA
TB2	DB
TB3	DG
TB4	SLD
TB5	+24V
TB6	⏚ (FG)
TB7	24G
TB8	Y0
TB9	COM B
TB10	Y1
TB11	COM B
TB12	Y2
TB13	COM B
TB14	Y3
TB15	COM B
TB16	Y4
TB17	COM B
TB18	Y5
TB19	COM B
TB20	Y6
TB21	COM B
TB22	Y7
TB23	COM B
TB24	COM A
TB25	COM B

All COM B terminals are connected inside the module (shared common).

5 - 34

5.1.18 AJ65SBTB2N-16S triac output module

Item \ Type		Triac output module	
		AJ65SBTB2N-16S	Appearance
Number of output points		16 points	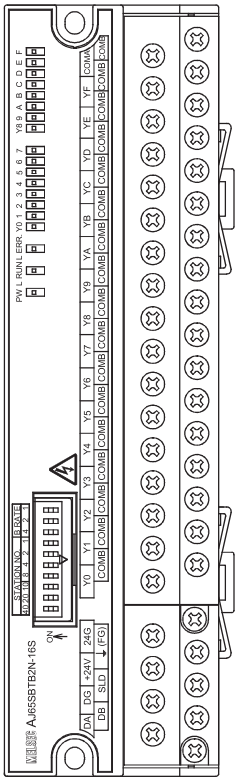
Isolation method		Photocoupler	
Rated load voltage		100 to 240VAC, 50/60Hz ±5%	
Load voltage distortion ratio		Within 5%	
Max. load voltage		264VAC	
Max. load current		0.6A/point, 4.8A/common	
Min. load voltage/current		50VAC 100mA, 100VAC 10mA, 240VAC 10mA	
Max. inrush current		25A, 10ms or less	
Leakage current at OFF		1.5mArms or lower (at 100VACrms, 60Hz), 3mArms or lower (at 200VACrms, 60Hz)	
Max. voltage drop at ON		1.5VACrms or lower (at 0.6A)	
Response time	OFF→ON	1ms or less	
	ON→OFF	Total of 1ms and 0.5 cycles or less	
Surge suppressor		CR absorber (0.01μF + 47Ω)	
Wiring method for common		16 points/common (2-wire, terminal block type)	
Number of occupied stations		32-point assignment/station (16 points used)	
Module power supply	Voltage	24VDC (ripple ratio: within 5%) (allowable voltage range: 20.4 to 26.4VDC)	
	Current	85mA or lower (at 24VDC and all points ON)	
Noise immunity		Noise voltage: 1500Vp-p (AC type), 500Vp-p (DC type), noise width 1μs, noise frequency 25 to 60Hz (noise simulator condition) Fast transient/burst immunity test IEC 61000-4-4:1kV	
Withstand voltage		2830VACrms for 3 cycles between all AC external terminals and ground (2000m above sea level) 500VAC for 1 minute between all DC external terminals and ground	
Insulation resistance		10MΩ or higher between all AC external terminals and ground (500VDC insulation resistance tester) 10MΩ or higher between all DC external terminals and ground (500VDC insulation resistance tester)	
Weight		0.35kg	
External connection system	Communication part, module power supply part	7-point two-piece terminal block [Transmission circuit, module power supply, FG] M3×5.2 screw (tightening torque range: 0.59 to 0.88N•m) Applicable solderless terminal: 2 or less	
	I/O power supply part, I/O part	34-point direct-mount terminal block [I/O power supply, I/O signal] M3×5.2 screw (tightening torque range: 0.59 to 0.88N•m) Applicable solderless terminal: 2 or less	
Module mounting screw		M4 screw with plain washer finished round (tightening torque range: 0.78 to 1.08N•m) Mountable with a DIN rail in 6 orientations	
Applicable DIN rail		TH35-7.5Fe, TH35-7.5Al (compliant with IEC 60715 and JIS C 2812)	
Applicable solderless terminal		• RAV1.25-3 (compliant with JIS C 2805) [Applicable wire size: 0.3 to 1.25mm^2 (22 to 16 AWG) stranded wire] • V2-MS3, RAP2-3SL, TGV2-3N [Applicable wire size: 1.25 to 2.0mm^2 (16 to 14 AWG) stranded wire]	
Wire	Material	Copper	
	Temperature rating	75°C or more	
Accessory		User's manual	

* For applicable solderless terminals connected to the terminal block, refer to the table above. Use applicable wires for the solderless terminals and fix them with an appropriate tightening torque. Use UL listed solderless terminals and, for crimping, use a tool recommended by their manufacturer.

5 - 35

External connection

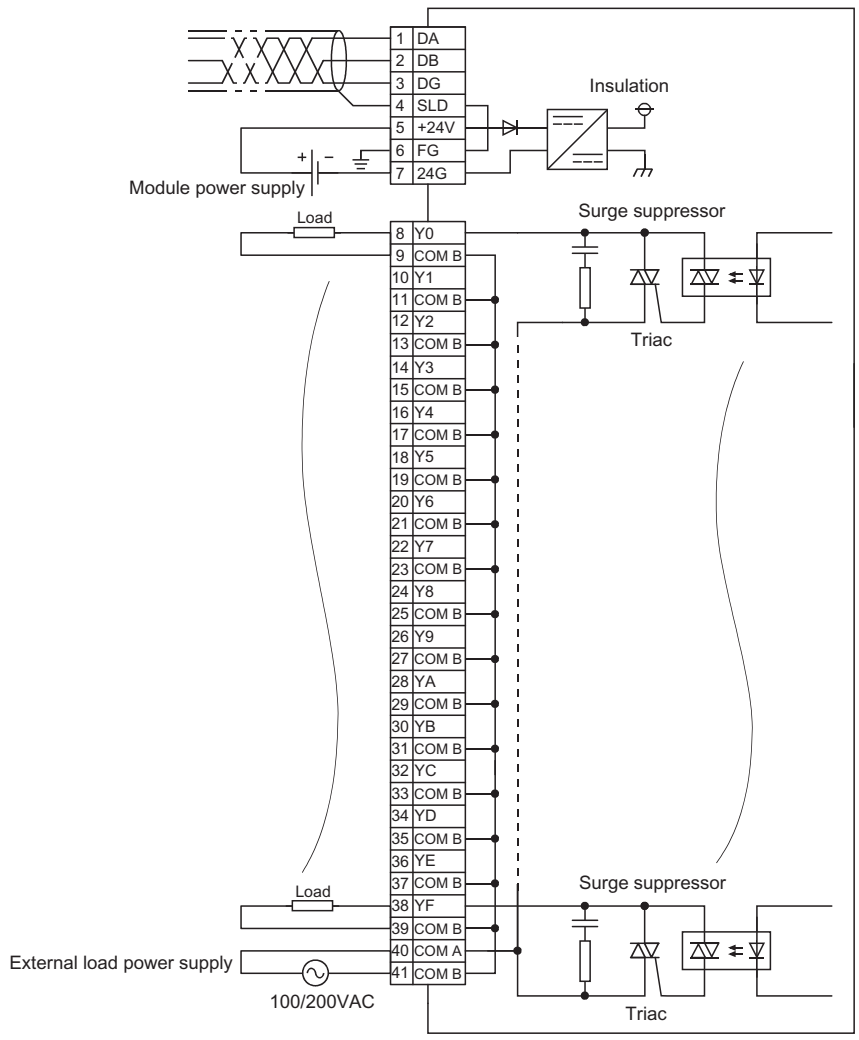

Terminal number	Signal name
TB1	DA
TB2	DB
TB3	DG
TB4	SLD
TB5	+24V
TB6	⏚ (FG)
TB7	24G
TB8	Y0
TB9	COM B
TB10	Y1
TB11	COM B
TB12	Y2
TB13	COM B
TB14	Y3
TB15	COM B
TB16	Y4
TB17	COM B
TB18	Y5
TB19	COM B
TB20	Y6
TB21	COM B
TB22	Y7
TB23	COM B
TB24	Y8
TB25	COM B
TB26	Y9
TB27	COM B
TB28	YA
TB29	COM B
TB30	YB
TB31	COM B
TB32	YC
TB33	COM B
TB34	YD
TB35	COM B
TB36	YE
TB37	COM B
TB38	YF
TB39	COM B
TB40	COM A
TB41	COM B

All COM B terminals are connected inside the module (shared common).

5 - 36

AbN
automation

5.1.19 AJ65DBTB1-32T1 transistor output module (sink type)

Item \ Type		Transistor output module	
		AJ65DBTB1-32T1	Appearance
Number of output points		32 points	
Isolation method		Photocoupler	
Rated load voltage		12/24VDC (ripple ratio: within 5%)	
Operating load voltage range		10.2 to 31.2VDC	
Max. load current		0.5A/point, 8A/common (2A/terminal)	
Max. inrush current		1.2A, 10ms or less	
Leakage current at OFF		0.1mA or lower	
Max. voltage drop at ON		0.3VDC or lower (TYP.) 0.5A, 0.6VDC or lower (MAX.) 0.5A	
Output type		Sink type	
Protection function		None	
Response time	OFF→ON	0.5ms or less	
	ON→OFF	1.5ms or less (resistive load)	
External power supply for output part	Voltage	12/24VDC (ripple ratio: within 5%) (allowable voltage range: 10.2 to 31.2VDC)	
	Current	50mA or lower (at 24VDC and all points ON), excluding external load current	
Surge suppressor		Zener diode	
Wiring method for common		32 points/common (4 points) (1-wire, terminal block type)	
Number of occupied stations		32-point assignment/station (32 points used)	
Module power supply	Voltage	24VDC (ripple ratio: within 5%) (allowable voltage range: 20.4 to 26.4VDC)	
	Current	65mA or lower (at 24VDC and all points ON)	
Noise immunity		Noise voltage 500Vp-p, noise width 1μs, noise frequency 25 to 60Hz (DC type noise simulator condition)	
Withstand voltage		500VAC for 1 minute between all DC external terminals and ground	
Insulation resistance		10MΩ or higher between all DC external terminals and ground (500VDC insulation resistance tester)	
Protection degree		IP2X	
Weight		0.7kg	
External connection system		50-point terminal block [Transmission circuit, module power supply, FG, I/O power supply, I/O signal] M3×7 screw (tightening torque range: 0.68 to 0.92N•m) Applicable solderless terminal: 2 or less	
Module mounting screw		M4 screw with plain washer finished round (tightening torque range: 0.78 to 1.08N•m)	
Applicable solderless terminal		• R1.25-3.5 (compliant with JIS C 2805) [Applicable wire size: 0.3 to 1.25mm^2 (22 to 16 AWG) stranded wire] • RAV2-3.5 (compliant with JIS C 2805) [Applicable wire size: 1.25 to 2.0mm^2 (16 to 14 AWG) stranded wire]	
Wire	Material	Copper	
	Temperature rating	75°C or more	
Accessory		User's manual	
Part sold separately		A6DIN1C, A2CCOM-TB	

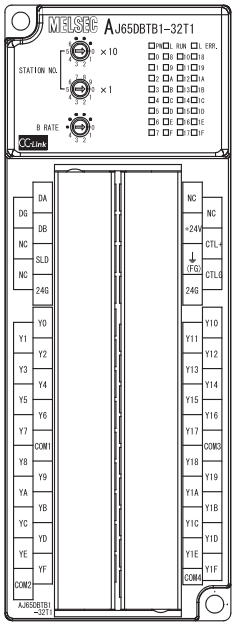

* For applicable solderless terminals connected to the terminal block, refer to the table above. Use applicable wires for the solderless terminals and fix them with an appropriate tightening torque. Use UL listed solderless terminals and, for crimping, use a tool recommended by their manufacturer.

5 - 37

External connection

Terminal number	Signal name
TB1	DA
TB2	DG
TB3	DB
TB4	Empty
TB5	SLD
TB6	Empty
TB7	24G
TB8	Y0
TB9	Y1
TB10	Y2
TB11	Y3
TB12	Y4
TB13	Y5
TB14	Y6
TB15	Y7
TB16	COM1
TB17	Y8
TB18	Y9
TB19	YA
TB20	YB
TB21	YC
TB22	YD
TB23	YE
TB24	YF
TB25	COM2

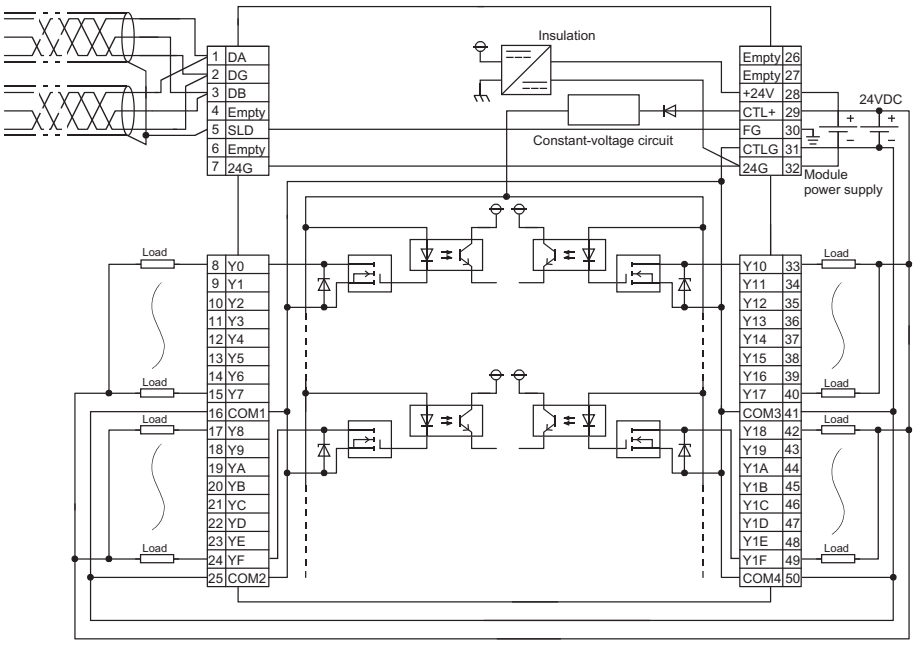

Terminal number	Signal name
TB26	Empty
TB27	Empty
TB28	+24V
TB29	CTL+
TB30	⏚ (FG)
TB31	CTLG
TB32	24G
TB33	Y10
TB34	Y11
TB35	Y12
TB36	Y13
TB37	Y14
TB38	Y15
TB39	Y16
TB40	Y17
TB41	COM3
TB42	Y18
TB43	Y19
TB44	Y1A
TB45	Y1B
TB46	Y1C
TB47	Y1D
TB48	Y1E
TB49	Y1F
TB50	COM4

5 - 38

AbN
automation

5.1.20 AJ65DBTB1-32R contact output module

Item \ Type			Contact output module: AJ65DBTB1-32R	Appearance
Number of output points			32 points	
Isolation method			Photocoupler	
Rated load voltage/current			2A/point, 4A/common (2A/terminal) at 24VDC (resistive load) or 240VAC (cosϕ=1)	
Min. switching load			5VDC, 1mA	
Max. switching voltage			264VAC, 125VDC	
Response time	OFF→ON		10ms or less	
	ON→OFF		12ms or less	
Life	Mechanical		20 million times or more	
	Electrical		Rated switching voltage/current load: 100 thousand times or more 200VAC 1.5A, 240VAC 1A (cosϕ=0.7): 100 thousand times or more 200VAC 1A, 240VAC 0.5A (cosϕ=0.35): 100 thousand times or more 24VDC 1A, 100VDC 0.1A (L/R=7ms): 100 thousand times or more	
Max. switching frequency			3600 times/hour	
Surge suppressor			None	
External power supply for output part (CTL+ and CTLG terminals)		Voltage	24VDC ±10% (ripple ratio: 4Vp-p or lower)	
		Current	180mA or lower (at 24VDC and all points ON)	
Wiring method for common			8 points/common (1-wire, terminal block type)	
Number of occupied stations			32-point assignment/station (32 points used)	
Module power supply		Voltage	24VDC (ripple ratio: within 5%) (allowable voltage range: 20.4 to 26.4VDC)	
		Current	80mA or lower (at 24VDC and all points ON)	
Noise immunity			Noise voltage: 1500Vp-p (AC type), 500Vp-p (DC type), noise width 1μs, noise frequency 25 to 60Hz (noise simulator condition)	
Withstand voltage			1500VAC for 1 minute between all AC external terminals and ground 500VAC for 1 minute between all DC external terminals and ground	
Insulation resistance			10MΩ or higher between all AC external terminals and ground (500VDC insulation resistance tester) 10MΩ or higher between all DC external terminals and ground (500VDC insulation resistance tester)	
Protection degree			IP1X	
Weight			0.7kg	
External connection system			50-point terminal block [Transmission circuit, module power supply, FG, I/O power supply, I/O signal] M3.5×7 screw (tightening torque range: 0.68 to 0.92N•m) Applicable solderless terminal: 2 or less	
Module mounting screw			M4 screw with plain washer finished round (tightening torque range: 0.78 to 1.08N•m)	
Applicable solderless terminal			• R1.25-3.5 (compliant with JIS C 2805) [Applicable wire size: 0.3 to 1.25mm^2 (22 to 16 AWG) stranded wire] • RAV2-3.5 (compliant with JIS C 2805) [Applicable wire size: 1.25 to 2.0mm^2 (16 to 14 AWG) stranded wire]	
Wire	Material		Copper	
	Temperature rating		75°C or more	
Accessory			User's manual	
Part sold separately			A6DIN1C, A2CCOM-TB	

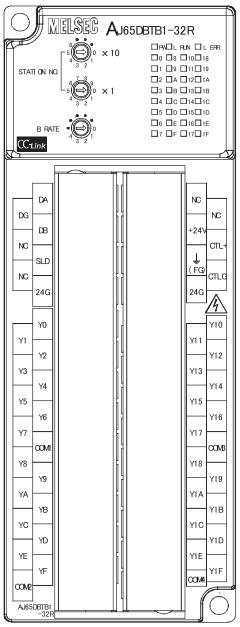

* For applicable solderless terminals connected to the terminal block, refer to the table above. Use applicable wires for the solderless terminals and fix them with an appropriate tightening torque. Use UL listed solderless terminals and, for crimping, use a tool recommended by their manufacturer.

5 - 39

External connection

Terminal number	Signal name
TB1	DA
TB2	DG
TB3	DB
TB4	Empty
TB5	SLD
TB6	Empty
TB7	24G
TB8	Y0
TB9	Y1
TB10	Y2
TB11	Y3
TB12	Y4
TB13	Y5
TB14	Y6
TB15	Y7
TB16	COM1
TB17	Y8
TB18	Y9
TB19	YA
TB20	YB
TB21	YC
TB22	YD
TB23	YE
TB24	YF
TB25	COM2

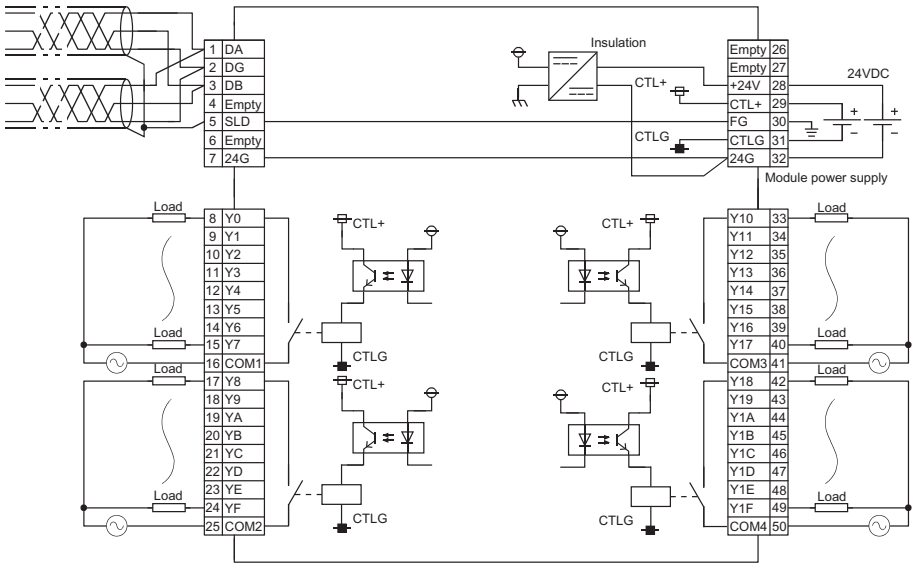

Terminal number	Signal name
TB26	Empty
TB27	Empty
TB28	+24V
TB29	CTL+
TB30	⏚ (FG)
TB31	CTLG
TB32	24G
TB33	Y10
TB34	Y11
TB35	Y12
TB36	Y13
TB37	Y14
TB38	Y15
TB39	Y16
TB40	Y17
TB41	COM3
TB42	Y18
TB43	Y19
TB44	Y1A
TB45	Y1B
TB46	Y1C
TB47	Y1D
TB48	Y1E
TB49	Y1F
TB50	COM4

5 - 40

AbN
automation

5.2 Spring Clamp Terminal Block Type Output Module

5.2.1 AJ65VBTS2-16T transistor output module (sink type)

Item \ Type			Transistor output module AJ65VBTS2-16T	Appearance
Number of output points			16 points	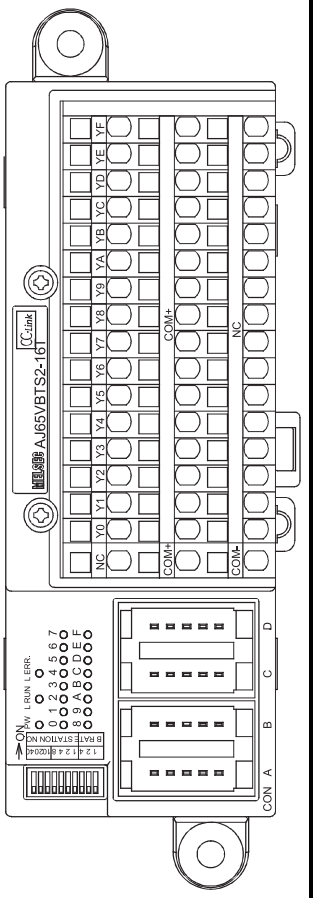
Isolation method			Photocoupler	
Rated load voltage			12/24VDC (ripple ratio: within 5%)	
Operating load voltage range			10.2 to 26.4VDC	
Max. load current			0.5A/point, 4A/common	
Max. inrush current			1.0A, 10ms or less	
Leakage current at OFF			0.1mA or lower	
Max. voltage drop at ON			0.3VDC or lower (TYP.) 0.5A, 0.6VDC or lower (MAX.) 0.5A	
Output type			Sink type	
Protection function			None	
Response time		OFF→ON	1ms or less	
		ON→OFF	1ms or less (resistive load)	
External power supply for output part		Voltage	12/24VDC (ripple ratio: within 5%) (allowable voltage range: 10.2 to 26.4VDC)	
		Current	30mA or lower (at 24VDC and all points ON), excluding external load current	
Surge suppressor			Zener diode	
Wiring method for common			16 points/common (2-wire, spring clamp terminal block type)	
Number of occupied stations			32-point assignment/station (16 points used)	
Module power supply		Voltage	24VDC (ripple ratio: within 5%) (allowable voltage range: 20.4 to 26.4VDC)	
		Current	45mA or lower (at 24VDC and all points ON)	
Noise immunity			Noise voltage 500Vp-p, noise width 1μs, noise frequency 25 to 60Hz (DC type noise simulator condition)	
Withstand voltage			500VAC for 1 minute between all DC external terminals and ground	
Insulation resistance			10MΩ or higher between all DC external terminals and ground (500VDC insulation resistance tester)	
Protection degree			IP1XB	
Weight			0.24kg	
External connection system	Communication part		One-touch connector for communication [Transmission circuit] 5-pin IDC plug is sold separately: A6CON-L5P <Optional> Online connector for communication: A6CON-LJ5P	
	Power supply part		One-touch connector for power supply and FG [Module power supply, FG] 5-pin IDC plug is sold separately: A6CON-PW5P, A6CON-PW5P-SOD <Optional> Online connector for power supply: A6CON-PWJ5P	
	I/O part		2-piece spring clamp terminal block [I/O power supply, I/O signals]	
Applicable DIN rail			TH35-7.5Fe, TH35-7.5Al (compliant with IEC 60715 and JIS C 2812)	
Applicable wire size	Connector for communication		Applicable cable: FANC-110SBH, FA-CBL200PSBH, CS-110	
	Connector for power supply and FG		0.66 to 0.98mm^2 (18 AWG) [ϕ2.2 to 3.0mm (A6CON-PW5P), ϕ2.0 to 2.3mm (A6CON-PW5P-SOD)] Wire diameter: 0.16mm or more Insulating coating material: PVC (heat-resistant)	
	Spring clamp terminal block for I/O		Stranded wire 0.08 to 1.5mm^2 (28 to 16 AWG) * 1 Wire strip length: 8 to 11mm	
		Applicable solderless terminal	NF0.5 [Applicable wire size: 0.5mm^2] NF0.75 [Applicable wire size: 0.75mm^2] NF1 [Applicable wire size: 0.9 to 1.0mm^2] NF1.5 [Applicable wire size: 1.25 to 1.5mm^2] TGV TC1.25-9T [Applicable wire size: 0.3 to 1.65mm^2] TGWV TC1.25-T9 [Applicable wire size: 0.3 to 1.65mm^2]	
Accessory			User's manual, Holding fixtures for screw installation	

* 1: Insert one wire per terminal.

5 - 41

External connection

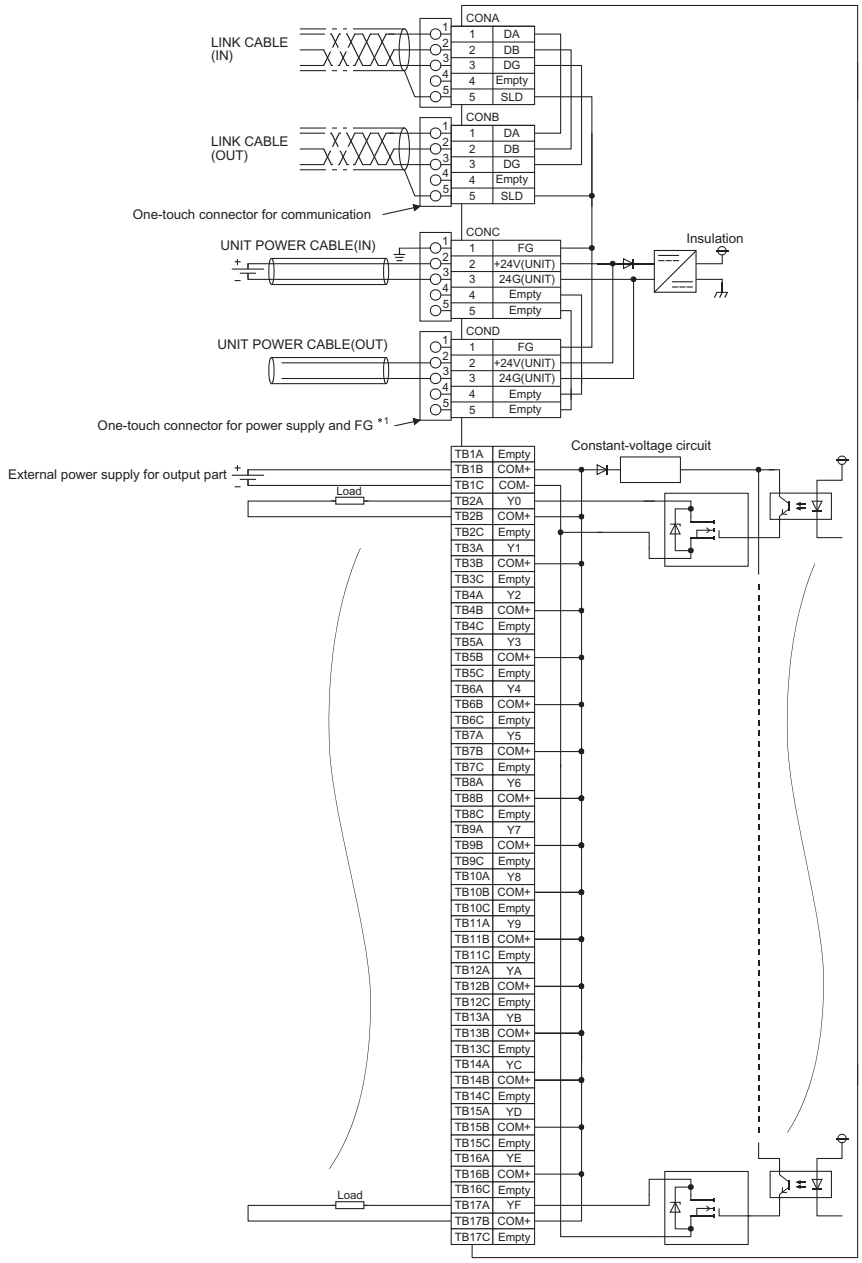

Pin number		Signal name
CON A, B	1	DA
	2	DB
	3	DG
	4	Empty
	5	SLD
CON C, D	1	⏚ (FG)
	2	+24V (UNIT)
	3	24G (UNIT)
	4	Empty
	5	Empty

Terminal block

Column A		Column B		Column C	
1	Empty	1	COM+	1	COM-
2	Y0	2	COM+	2	Empty
3	Y1	3	COM+	3	Empty
4	Y2	4	COM+	4	Empty
5	Y3	5	COM+	5	Empty
6	Y4	6	COM+	6	Empty
7	Y5	7	COM+	7	Empty
8	Y6	8	COM+	8	Empty
9	Y7	9	COM+	9	Empty
10	Y8	10	COM+	10	Empty
11	Y9	11	COM+	11	Empty
12	YA	12	COM+	12	Empty
13	YB	13	COM+	13	Empty
14	YC	14	COM+	14	Empty
15	YD	15	COM+	15	Empty
16	YE	16	COM+	16	Empty
17	YF	17	COM+	17	Empty

* 1: Attach an unwired connector plug to an unused one-touch connector for power supply and FG.

5 - 42

AbN
automation

External connection

<When using online connectors>

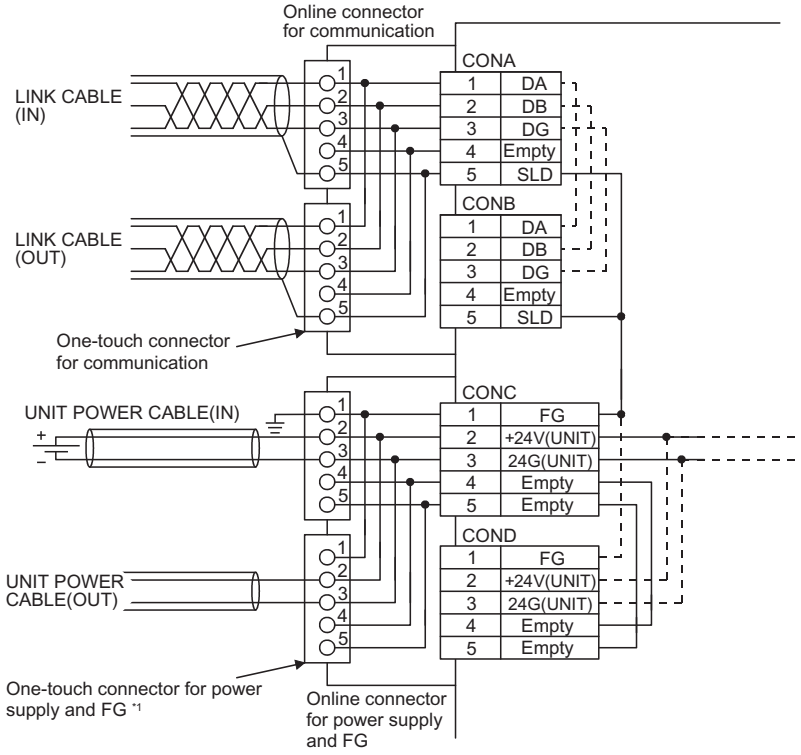

* 1: Attach an unwired connector plug to an unused one-touch connector for power supply and FG.

Pin layout

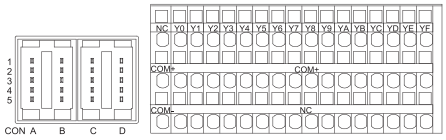

Viewed from the front of the module

5 - 43

5.2.2 AJ65VBTS2-32T transistor output module (sink type)

Item \ Type		Transistor output module AJ65VBTS2-32T	Appearance
Number of output points		32 points	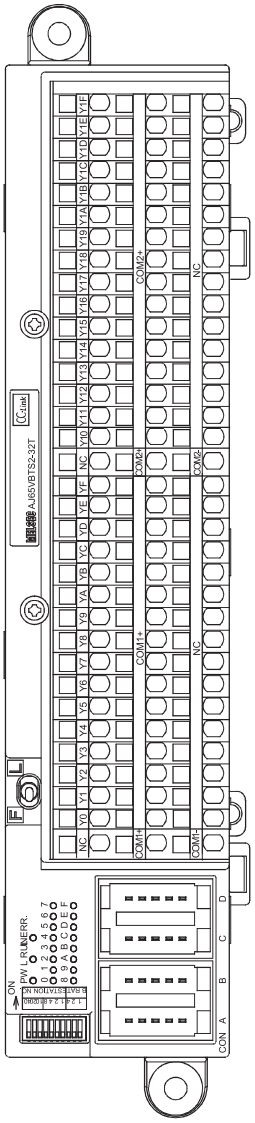
Isolation method		Photocoupler	
Rated load voltage		12/24VDC (ripple ratio: within 5%)	
Operating load voltage range		10.2 to 26.4VDC	
Max. load current		0.5A/point, 4A/common	
Max. inrush current		1.0A, 10ms or less	
Leakage current at OFF		0.1mA or lower	
Max. voltage drop at ON		0.3VDC or lower (TYP.) 0.5A, 0.6VDC or lower (MAX.) 0.5A	
Output type		Sink type	
Protection function		None	
Response time	OFF→ON	1ms or less	
	ON→OFF	1ms or less (resistive load)	
External power supply for output part	Voltage	12/24VDC (ripple ratio: within 5%) (allowable voltage range: 10.2 to 26.4VDC)	
	Current	30mA or lower (at 24VDC and all points ON), excluding external load current	
Surge suppressor		Zener diode	
Wiring method for common		16 points/common (2-wire, spring clamp terminal block type)	
Number of occupied stations		32-point assignment/station (32 points used)	
Module power supply	Voltage	24VDC (ripple ratio: within 5%) (allowable voltage range: 20.4 to 26.4VDC)	
	Current	60mA or lower (at 24VDC and all points ON)	
Noise immunity		Noise voltage 500Vp-p, noise width 1μs, noise frequency 25 to 60Hz (DC type noise simulator condition)	
Withstand voltage		500VAC for 1 minute between all DC external terminals and ground	
Insulation resistance		10MΩ or higher between all DC external terminals and ground (500VDC insulation resistance tester)	
Protection degree		IP1XB	
Weight		0.40kg	
External connection system	Communication part	One-touch connector for communication [Transmission circuit] 5-pin IDC plug is sold separately: A6CON-L5P <Optional> Online connector for communication: A6CON-LJ5P	
	Power supply part	One-touch connector for power supply and FG [Module power supply, FG] 5-pin IDC plug is sold separately: A6CON-PW5P, A6CON-PW5P-SOD <Optional> Online connector for power supply: A6CON-PWJ5P	
	I/O part	2-piece spring clamp terminal block [I/O power supply, I/O signals]	
Applicable DIN rail		TH35-7.5Fe, TH35-7.5Al (compliant with IEC 60715 and JIS C 2812)	
Applicable wire size	Connector for communication	Applicable cable: FANC-110SBH, FA-CBL200PSBH, CS-110	
	Connector for power supply and FG	0.66 to 0.98mm^2 (18 AWG) [ϕ2.2 to 3.0mm (A6CON-PW5P), ϕ2.0 to 2.3mm (A6CON-PW5P-SOD)] Wire diameter: 0.16mm or more Insulating coating material: PVC (heat-resistant)	
	Spring clamp terminal block for I/O	Stranded wire 0.08 to 1.5mm^2 (28 to 16 AWG) ＊1 Wire strip length: 8 to 11mm	
	Applicable solderless terminal	NF0.5 [Applicable wire size: 0.5mm^2] NF0.75 [Applicable wire size: 0.75mm^2] NF1 [Applicable wire size: 0.9 to 1.0mm^2] NF1.5 [Applicable wire size: 1.25 to 1.5mm^2] TGV TC1.25-9T [Applicable wire size: 0.3 to 1.65mm^2] TGWV TC1.25-T9 [Applicable wire size: 0.3 to 1.65mm^2]	
Accessory		User's manual, Holding fixtures for screw installation	

＊1: Insert one wire per terminal.

5 - 44

AbN
automation

External connection

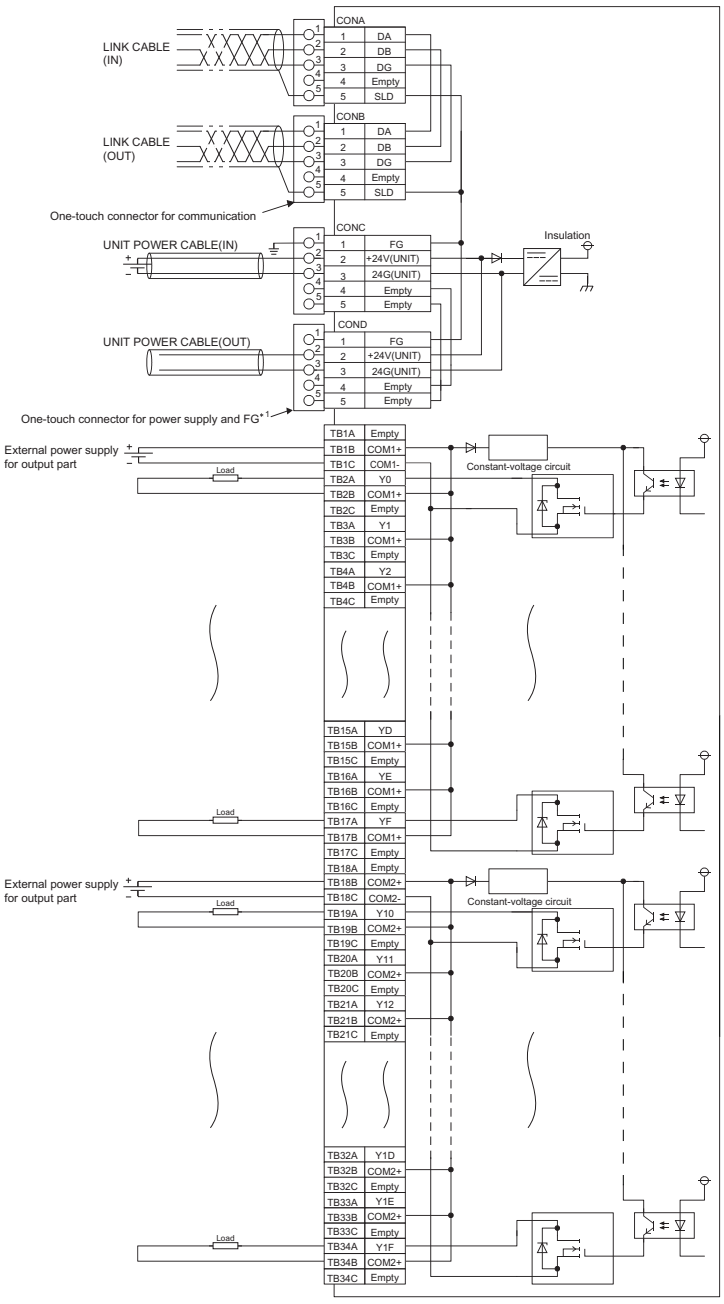

Pin number		Signal name
CON A, B	1	DA
	2	DB
	3	DG
	4	Empty
	5	SLD
CON C, D	1	⏚ (FG)
	2	+24V (UNIT)
	3	24G (UNIT)
	4	Empty
	5	Empty

Terminal block

Column A		Column B		Column C	
1	Empty	1	COM1+	1	COM1-
2	Y0	2	COM1+	2	Empty
3	Y1	3	COM1+	3	Empty
4	Y2	4	COM1+	4	Empty
5	Y3	5	COM1+	5	Empty
6	Y4	6	COM1+	6	Empty
7	Y5	7	COM1+	7	Empty
8	Y6	8	COM1+	8	Empty
9	Y7	9	COM1+	9	Empty
10	Y8	10	COM1+	10	Empty
11	Y9	11	COM1+	11	Empty
12	YA	12	COM1+	12	Empty
13	YB	13	COM1+	13	Empty
14	YC	14	COM1+	14	Empty
15	YD	15	COM1+	15	Empty
16	YE	16	COM1+	16	Empty
17	YF	17	COM1+	17	Empty
18	Empty	18	COM2+	18	COM2-
19	Y10	19	COM2+	19	Empty
20	Y11	20	COM2+	20	Empty
21	Y12	21	COM2+	21	Empty
22	Y13	22	COM2+	22	Empty
23	Y14	23	COM2+	23	Empty
24	Y15	24	COM2+	24	Empty
25	Y16	25	COM2+	25	Empty
26	Y17	26	COM2+	26	Empty
27	Y18	27	COM2+	27	Empty
28	Y19	28	COM2+	28	Empty
29	Y1A	29	COM2+	29	Empty
30	Y1B	30	COM2+	30	Empty
31	Y1C	31	COM2+	31	Empty
32	Y1D	32	COM2+	32	Empty
33	Y1E	33	COM2+	33	Empty
34	Y1F	34	COM2+	34	Empty

* 1: Attach an unwired connector plug to an unused one-touch connector for power supply and FG.

5 - 45

External connection

<When using online connectors>

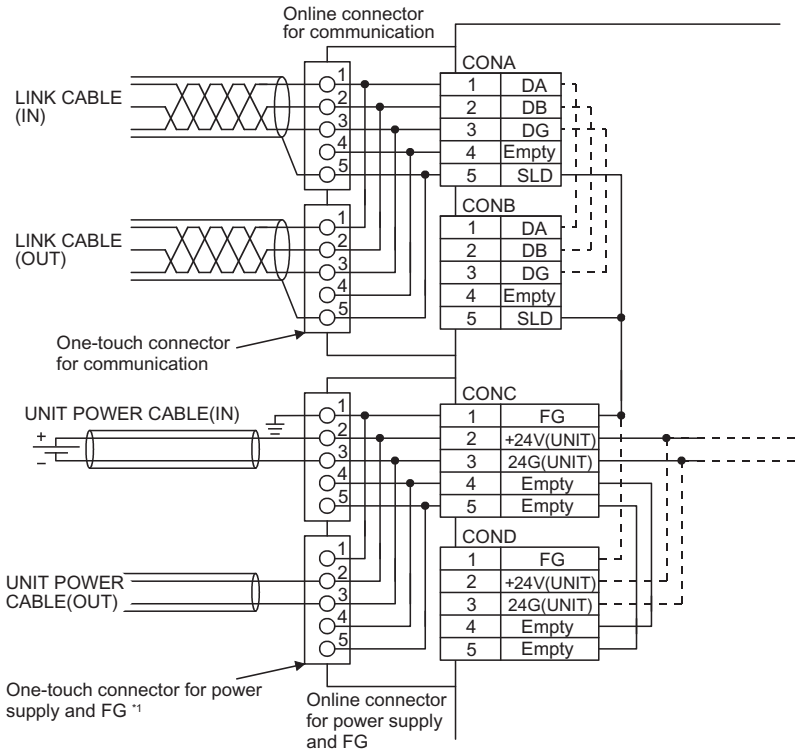

* 1: Attach an unwired connector plug to an unused one-touch connector for power supply and FG.

Pin layout

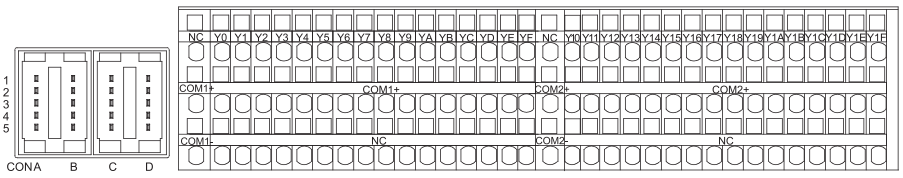

Viewed from the front of the module

5 - 46

5.3 Sensor Connector (e-CON) Type Output Module

5.3.1 AJ65VBTCE2-8T transistor output module (sink type)

Item \ Type		Transistor output module	
		AJ65VBTCE2-8T	Appearance
Number of output points		8 points	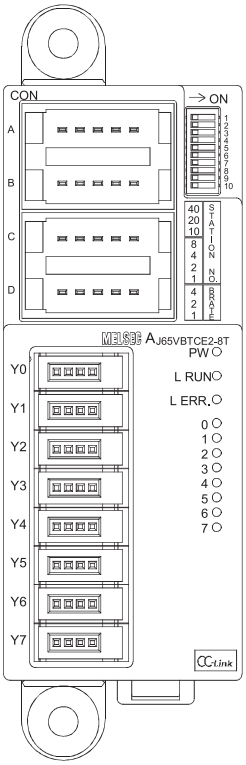
Isolation method		Photocoupler	
Rated load voltage		12/24VDC (ripple ratio: within 5%)	
Operating load voltage range		10.2 to 26.4VDC	
Max. load current		0.1A/point, 0.8A/common	
Max. inrush current		0.7A, 10ms or less	
Leakage current at OFF		0.1mA or lower	
Max. voltage drop at ON		0.1VDC or lower (TYP.) 0.1A, 0.2VDC or lower (MAX.) 0.1A	
Output type		Sink type	
Protection function		Overload protection, overvoltage protection, overheat protection	
Response time	OFF→ON	1ms or less	
	ON→OFF	1ms or less (resistive load)	
External power supply for output part	Voltage	12/24VDC (ripple ratio: within 5%) (allowable voltage range: 10.2 to 26.4VDC)	
	Current	5mA or lower (at 24VDC and all points ON), excluding external load current	
Surge suppressor		Zener diode	
Wiring method for common		8 points/common (2-wire, sensor connector (e-CON) type)	
Number of occupied stations		32-point assignment/station (8 points used)	
Module power supply	Voltage	24VDC (ripple ratio: within 5%) (allowable voltage range: 20.4 to 26.4VDC)	
	Current	35mA or lower (at 24VDC and all points ON)	
Noise immunity		Noise voltage 500Vp-p, noise width 1μs, noise frequency 25 to 60Hz (DC type noise simulator condition)	
Withstand voltage		500VAC for 1 minute between all DC external terminals and ground	
Insulation resistance		10MΩ or higher between all DC external terminals and ground (500VDC insulation resistance tester)	
Protection degree		IP1XB	
Weight		0.10kg	
External connection system	Communication part	One-touch connector for communication [Transmission circuit] 5-pin IDC plug is sold separately: A6CON-L5P <Optional> Online connector for communication: A6CON-LJ5P	
	Power supply part	One-touch connector for power supply and FG [Module power supply, I/O power supply, FG] 5-pin IDC plug is sold separately: A6CON-PW5P, A6CON-PW5P-SOD <Optional> Online connector for power supply: A6CON-PWJ5P	
	I/O part	Sensor connector (e-CON) [I/O signals] 4-pin IDC plug is sold separately. ＊1	
Applicable DIN rail		TH35-7.5Fe, TH35-7.5Al (compliant with IEC 60715 and JIS C 2812)	
Applicable wire size	Connector for communication	Applicable cable: FANC-110SBH, FA-CBL200PSBH, CS-110	
	Connector for power supply and FG	0.66 to 0.98mm^2 (18 AWG) [ϕ2.2 to 3.0mm (A6CON-PW5P), ϕ2.0 to 2.3mm (A6CON-PW5P-SOD)] Wire diameter: 0.16mm or more Insulating coating material: PVC (heat-resistant)	
	Connector for I/O	Sensor connector (e-CON). Applicable connector plugs are sold separately. ＊1 (applicable wire size: 0.08 to 0.5mm^2, depending on the connector plug)	
Accessory		User's manual, Holding fixtures for screw installation	

＊1: Refer to Section 1.6.2 for details.

5 - 47

External connection

<When using online connectors>

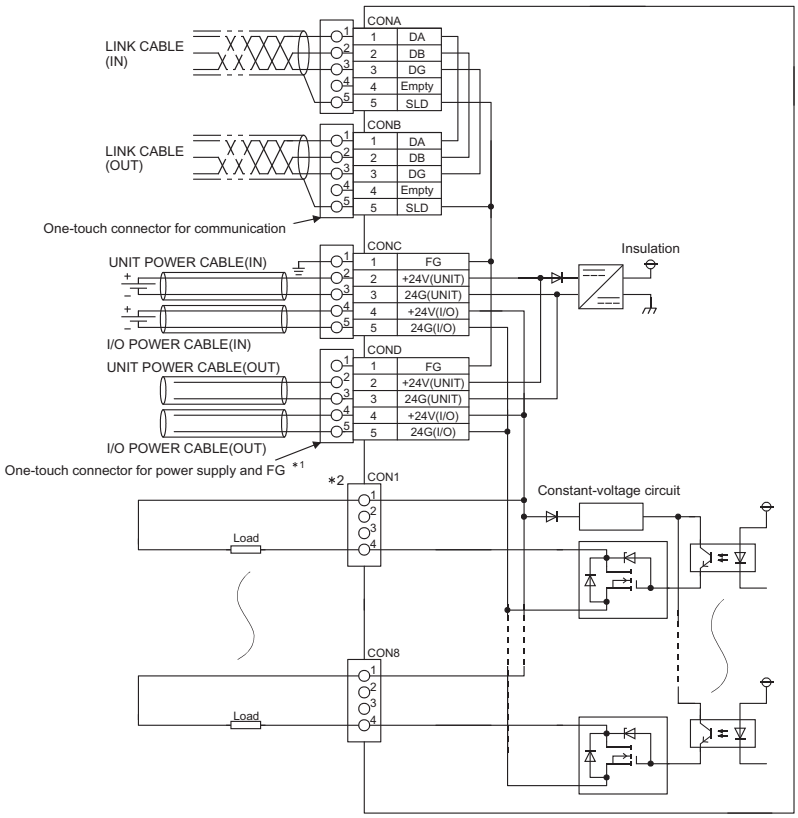

Pin number		Signal name
CON A,B	1	DA
	2	DB
	3	DG
	4	Empty
	5	SLD
CON C,D	1	⏚ (FG)
	2	+24V (UNIT)
	3	24G (UNIT)
	4	+24V (I/O)
	5	24G (I/O)

Pin number		Signal name	Pin layout
CON1 (Y0)	1	+24V	
	2	Empty	
	3	Empty	
	4	Y0	
CON2 (Y1)	1	+24V	
	2	Empty	
	3	Empty	
	4	Y1	
CON3 (Y2)	1	+24V	
	2	Empty	
	3	Empty	
	4	Y2	
CON4 (Y3)	1	+24V	
	2	Empty	
	3	Empty	
	4	Y3	
CON5 (Y4)	1	+24V	
	2	Empty	
	3	Empty	
	4	Y4	
CON6 (Y5)	1	+24V	
	2	Empty	
	3	Empty	
	4	Y5	
CON7 (Y6)	1	+24V	
	2	Empty	
	3	Empty	
	4	Y6	
CON8 (Y7)	1	+24V	
	2	Empty	
	3	Empty	
	4	Y7	

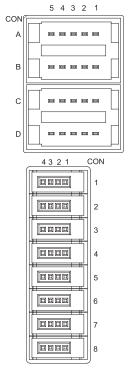

Viewed from the front of the module

* 1: Attach an unwired connector plug to an unused one-touch connector for power supply and FG.

* 2: Wiring the sensor connector (e-CON) incorrectly may cause malfunction or failure due to short circuit of the power supply.

5 - 48

AbN
automation

External connection

<When using online connectors>

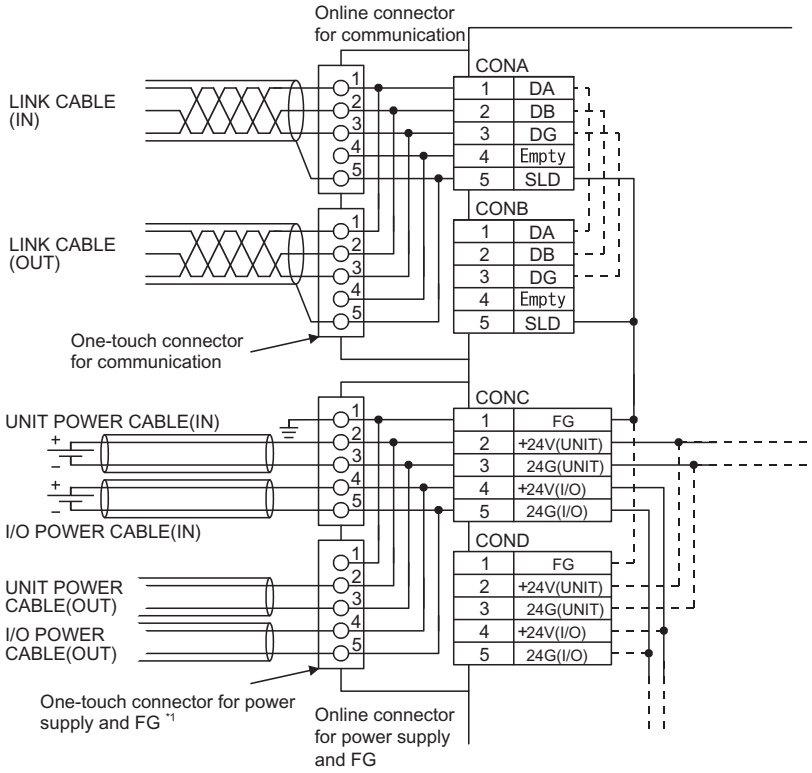

* 1: Attach an unwired connector plug to an unused one-touch connector for power supply and FG.

5 - 49

5.3.2 AJ65VBTCE2-16T transistor output module (sink type)

Item \ Type		Transistor output module	
		AJ65VBTCE2-16T	Appearance
Number of output points		16 points	
Isolation method		Photocoupler	
Rated load voltage		12/24VDC (ripple ratio: within 5%)	
Operating load voltage range		10.2 to 26.4VDC	
Max. load current		0.1A/point, 1.6A/common	
Max. inrush current		0.7A, 10ms or less	
Leakage current at OFF		0.1mA or lower	
Max. voltage drop at ON		0.1VDC or lower (TYP.) 0.1A, 0.2VDC or lower (MAX.) 0.1A	
Output type		Sink type	
Protection function		Overload protection, overvoltage protection, overheat protection	
Response time	OFF→ON	1ms or less	
	ON→OFF	1ms or less (resistive load)	
External power supply for output part	Voltage	12/24VDC (ripple ratio: within 5%) (allowable voltage range: 10.2 to 26.4VDC)	
	Current	10mA or lower (at 24VDC and all points ON), excluding external load current	
Surge suppressor		Zener diode	
Wiring method for common		16 points/common (2-wire, sensor connector (e-CON) type)	
Number of occupied stations		32-point assignment/station (16 points used)	
Module power supply	Voltage	24VDC (ripple ratio: within 5%) (allowable voltage range: 20.4 to 26.4VDC)	
	Current	45mA or lower (at 24VDC and all points ON)	
Noise immunity		Noise voltage 500Vp-p, noise width 1μs, noise frequency 25 to 60Hz (DC type noise simulator condition)	
Withstand voltage		500VAC for 1 minute between all DC external terminals and ground	
Insulation resistance		10MΩ or higher between all DC external terminals and ground (500VDC insulation resistance tester)	
Protection degree		IP1XB	
Weight		0.10kg	
External connection system	Communication part	One-touch connector for communication [Transmission circuit] 5-pin IDC plug is sold separately: A6CON-L5P <Optional> Online connector for communication: A6CON-LJ5P	
	Power supply part	One-touch connector for power supply and FG [Module power supply, I/O power supply, FG] 5-pin IDC plug is sold separately: A6CON-PW5P, A6CON-PW5P-SOD <Optional> Online connector for power supply: A6CON-PWJ5P	
	I/O part	Sensor connector (e-CON) [I/O signals] 4-pin IDC plug is sold separately. * 1	
Applicable DIN rail		TH35-7.5Fe, TH35-7.5Al (compliant with IEC 60715 and JIS C 2812)	
Applicable wire size	Connector for communication	Applicable cable: FANC-110SBH, FA-CBL200PSBH, CS-110	
	Connector for power supply and FG	0.66 to 0.98mm^2 (18 AWG) [ϕ2.2 to 3.0mm (A6CON-PW5P), ϕ2.0 to 2.3mm (A6CON-PW5P-SOD)] Wire diameter: 0.16mm or more Insulating coating material: PVC (heat-resistant)	
	Connector for I/O	Sensor connector (e-CON). Applicable connector plugs are sold separately. * 1 (applicable wire size: 0.08 to 0.5mm^2, depending on the connector plug)	
Accessory		User's manual, Holding fixtures for screw installation	

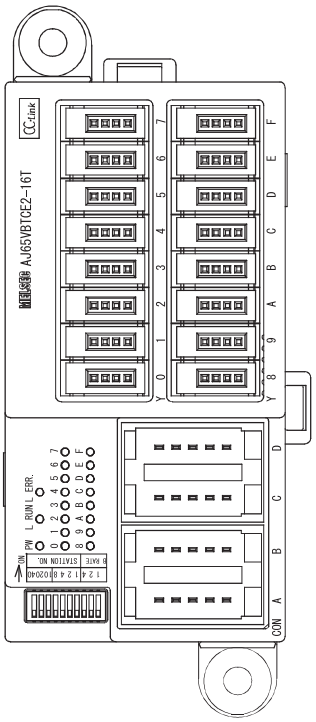

* 1: Refer to Section 1.6.2 for details.

5 - 50

AbN
automation

External connection

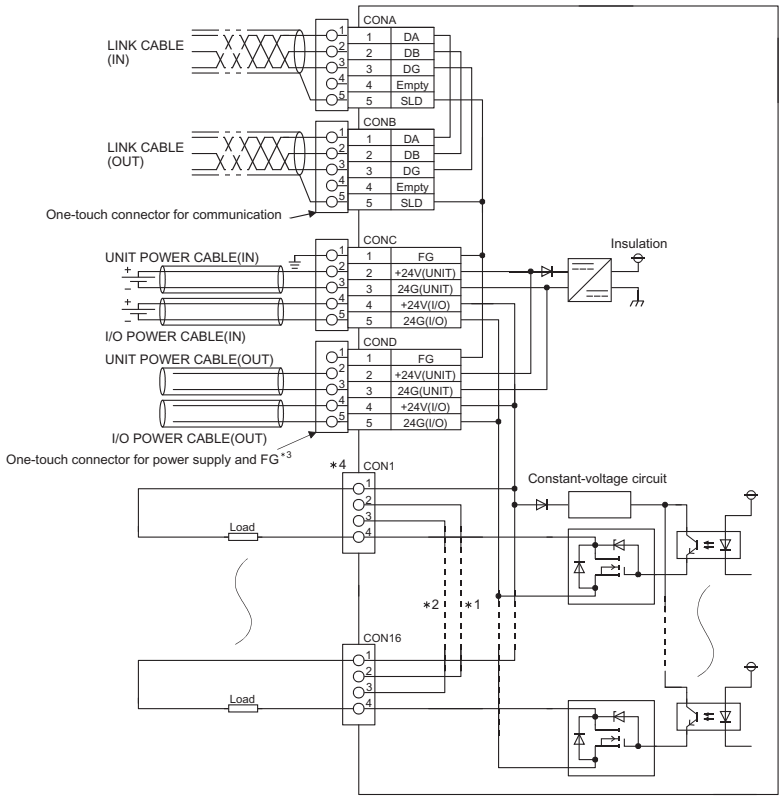

Pin number		Signal name
CON A, B	1	DA
	2	DB
	3	DG
	4	Empty
	5	SLD
CON C, D	1	⏚ (FG)
	2	+24V (UNIT)
	3	24G (UNIT)
	4	+24V (I/O)
	5	24G (I/O)

Pin number		Signal name	Pin number		Signal name
CON1 (Y0)	1	+24V	CON9 (Y8)	1	+24V
	2	Empty ＊1		2	Empty ＊1
	3	Empty ＊2		3	Empty ＊2
	4	Y0		4	Y8
CON2 (Y1)	1	+24V	CON10 (Y9)	1	+24V
	2	Empty ＊1		2	Empty ＊1
	3	Empty ＊2		3	Empty ＊2
	4	Y1		4	Y9
CON3 (Y2)	1	+24V	CON11 (YA)	1	+24V
	2	Empty ＊1		2	Empty ＊1
	3	Empty ＊2		3	Empty ＊2
	4	Y2		4	YA
CON4 (Y3)	1	+24V	CON12 (YB)	1	+24V
	2	Empty ＊1		2	Empty ＊1
	3	Empty ＊2		3	Empty ＊2
	4	Y3		4	YB
CON5 (Y4)	1	+24V	CON13 (YC)	1	+24V
	2	Empty ＊1		2	Empty ＊1
	3	Empty ＊2		3	Empty ＊2
	4	Y4		4	YC
CON6 (Y5)	1	+24V	CON14 (YD)	1	+24V
	2	Empty ＊1		2	Empty ＊1
	3	Empty ＊2		3	Empty ＊2
	4	Y5		4	YD
CON7 (Y6)	1	+24V	CON15 (YE)	1	+24V
	2	Empty ＊1		2	Empty ＊1
	3	Empty ＊2		3	Empty ＊2
	4	Y6		4	YE
CON8 (Y7)	1	+24V	CON16 (YF)	1	+24V
	2	Empty ＊1		2	Empty ＊1
	3	Empty ＊2		3	Empty ＊2
	4	Y7		4	YF

＊1: Since all No.2 pins of CON1 to CON16 are connected inside the module, they cannot be used.

＊2: Since all No.3 pins of CON1 to CON16 are connected inside the module, they cannot be used.

＊3: Attach an unwired connector plug to an unused one-touch connector for power supply and FG.

＊4: Wiring the sensor connector (e-CON) incorrectly may cause malfunction or failure due to short circuit of the power supply.

5 - 51

External connection

<When using online connectors>

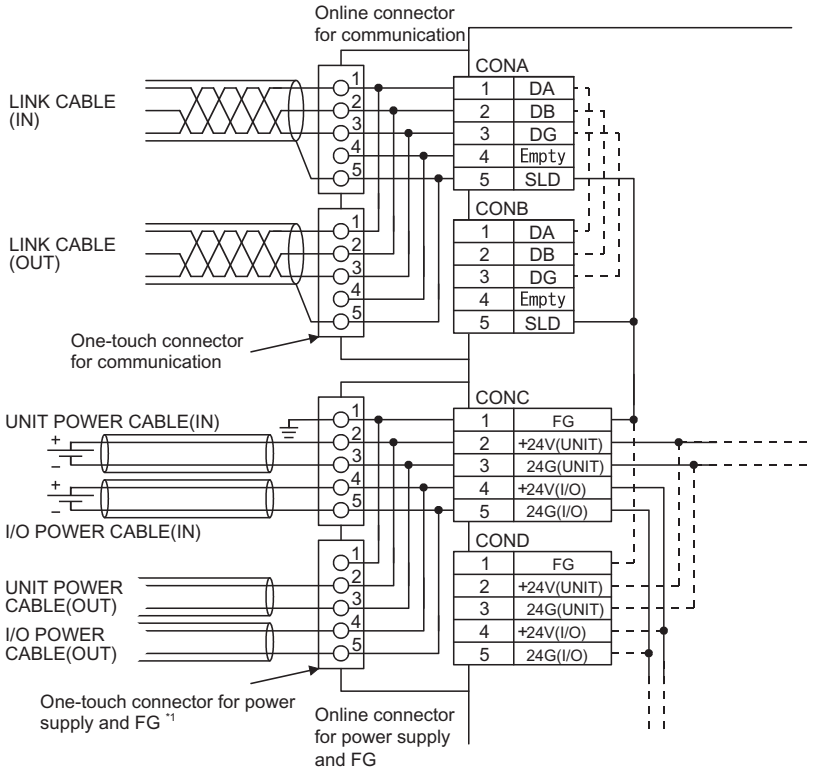

* 1: Attach an unwired connector plug to an unused one-touch connector for power supply and FG.

Pin layout

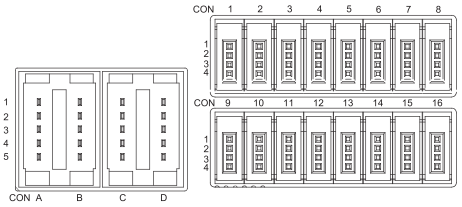

Viewed from the front of the module

5 - 52

AbN
automation

5.3.3 AJ65VBTCE3-16TE transistor output module (source type)

Item \ Type		Transistor output module	
		AJ65VBTCE3-16TE	Appearance
Number of output points		16 points	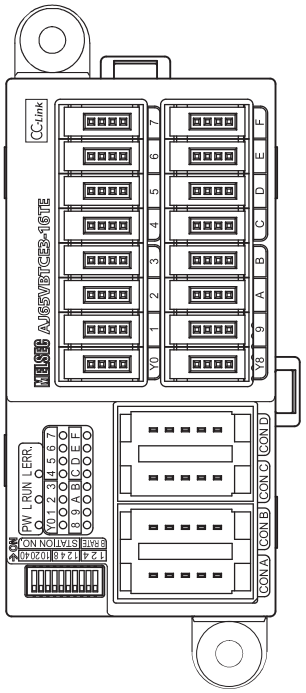
Isolation method		Photocoupler	
Rated load voltage		12/24VDC (ripple ratio: within 5%)	
Operating load voltage range		10.2 to 26.4VDC	
Max. load current		0.1A/point, 1.6A/common	
Max. inrush current		0.7A, 10ms or less	
Leakage current at OFF		0.1mA or lower	
Max. voltage drop at ON		0.1VDC or lower (TYP.) 0.1A, 0.2VDC or lower (MAX.) 0.1A	
Output type		Source type	
Protection function		Overload protection, overheat protection	
Response time	OFF→ON	1ms or less	
	ON→OFF	1ms or less (resistive load)	
External power supply for output part	Voltage	12/24VDC (ripple ratio: within 5%) (allowable voltage range: 10.2 to 26.4VDC)	
	Current	11mA or lower (at 24VDC and all points ON), excluding external load current	
Surge suppressor		Zener diode	
Supply current for connected device		1.0A or lower/common	
Wiring method for common		16 points/common (3-wire, sensor connector (e-CON) type)	
Number of occupied stations		32-point assignment/station (16 points used)	
Module power supply	Voltage	24VDC (ripple ratio: within 5%) (allowable voltage range: 20.4 to 26.4VDC)	
	Current	45mA or lower (at 24VDC and all points ON)	
Noise immunity		Noise voltage 500Vp-p, noise width 1μs, noise frequency 25 to 60Hz (DC type noise simulator condition)	
Withstand voltage		500VAC for 1 minute between all DC external terminals and ground	
Insulation resistance		10MΩ or higher between all DC external terminals and ground (500VDC insulation resistance tester)	
Protection degree		IP1XB	
Weight		0.11kg	
External connection system	Communication part	One-touch connector for communication [Transmission circuit] 5-pin IDC plug is sold separately: A6CON-L5P <Optional> Online connector for communication: A6CON-LJ5P	
	Power supply part	One-touch connector for power supply and FG [Module power supply, I/O power supply, FG] 5-pin IDC plug is sold separately: A6CON-PW5P, A6CON-PW5P-SOD <Optional> Online connector for power supply: A6CON-PWJ5P	
	I/O part	Sensor connector (e-CON) [I/O signals] 4-pin IDC plug is sold separately. * 1	
Applicable DIN rail		TH35-7.5Fe, TH35-7.5Al (compliant with IEC 60715 and JIS C 2812)	
Applicable wire size	Connector for communication	Applicable cable: FANC-110SBH, FA-CBL200PSBH, CS-110	
	Connector for power supply and FG	0.66 to 0.98mm^2 (18 AWG) [ϕ2.2 to 3.0mm (A6CON-PW5P), ϕ2.0 to 2.3mm (A6CON-PW5P-SOD)] Wire diameter: 0.16mm or more Insulating coating material: PVC (heat-resistant)	
	Connector for I/O	Sensor connector (e-CON). Applicable connector plugs are sold separately. * 1 (applicable wire size: 0.08 to 0.5mm^2, depending on the connector plug)	
Accessory		User's manual, Holding fixtures for screw installation	

* 1: Refer to Section 1.6.2 for details.

5 - 53

External connection

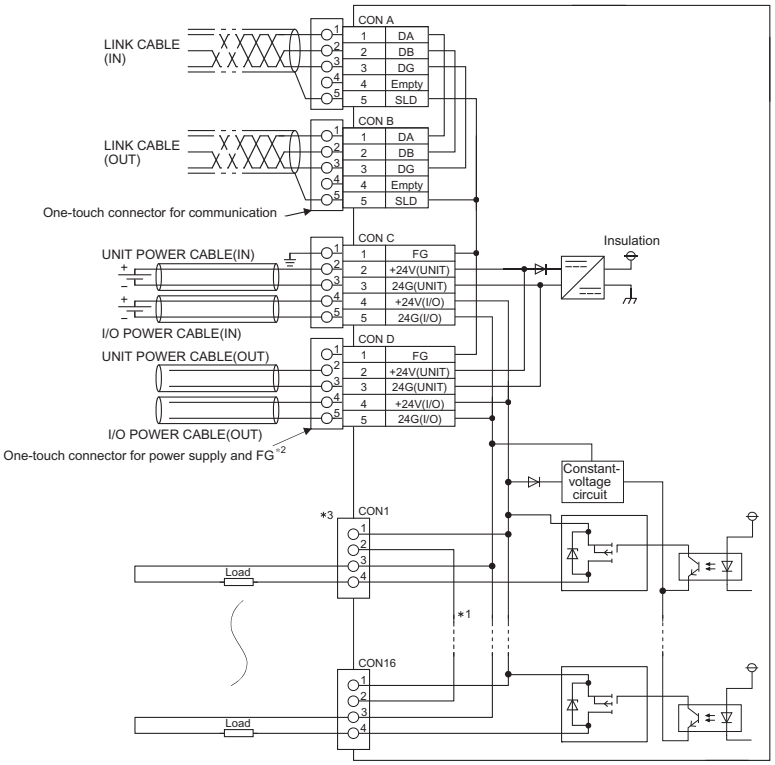

Pin number		Signal name
CON A, B	1	DA
	2	DB
	3	DG
	4	Empty
	5	SLD
CON C, D	1	⏚ (FG)
	2	+24V (UNIT)
	3	24G (UNIT)
	4	+24V (I/O)
	5	24G (I/O)

Pin number		Signal name	Pin number		Signal name
CON1 (Y0)	1	+24V	CON9 (Y8)	1	+24V
	2	Empty ＊1		2	Empty ＊1
	3	24G		3	24G
	4	Y0		4	Y8
CON2 (Y1)	1	+24V	CON10 (Y9)	1	+24V
	2	Empty ＊1		2	Empty ＊1
	3	24G		3	24G
	4	Y1		4	Y9
CON3 (Y2)	1	+24V	CON11 (YA)	1	+24V
	2	Empty ＊1		2	Empty ＊1
	3	24G		3	24G
	4	Y2		4	YA
CON4 (Y3)	1	+24V	CON12 (YB)	1	+24V
	2	Empty ＊1		2	Empty ＊1
	3	24G		3	24G
	4	Y3		4	YB
CON5 (Y4)	1	+24V	CON13 (YC)	1	+24V
	2	Empty ＊1		2	Empty ＊1
	3	24G		3	24G
	4	Y4		4	YC
CON6 (Y5)	1	+24V	CON14 (YD)	1	+24V
	2	Empty ＊1		2	Empty ＊1
	3	24G		3	24G
	4	Y5		4	YD
CON7 (Y6)	1	+24V	CON15 (YE)	1	+24V
	2	Empty ＊1		2	Empty ＊1
	3	24G		3	24G
	4	Y6		4	YE
CON8 (Y7)	1	+24V	CON16 (YF)	1	+24V
	2	Empty ＊1		2	Empty ＊1
	3	24G		3	24G
	4	Y7		4	YF

＊1: Since all No.2 pins of CON1 to CON16 are connected inside the module, they cannot be used.

＊2: Attach an unwired connector plug to an unused one-touch connector for power supply and FG.

＊3: Wiring the sensor connector (e-CON) incorrectly may cause malfunction or failure due to short circuit of the power supply.

5 - 54

AbN
automation

External connection

<When using online connectors>

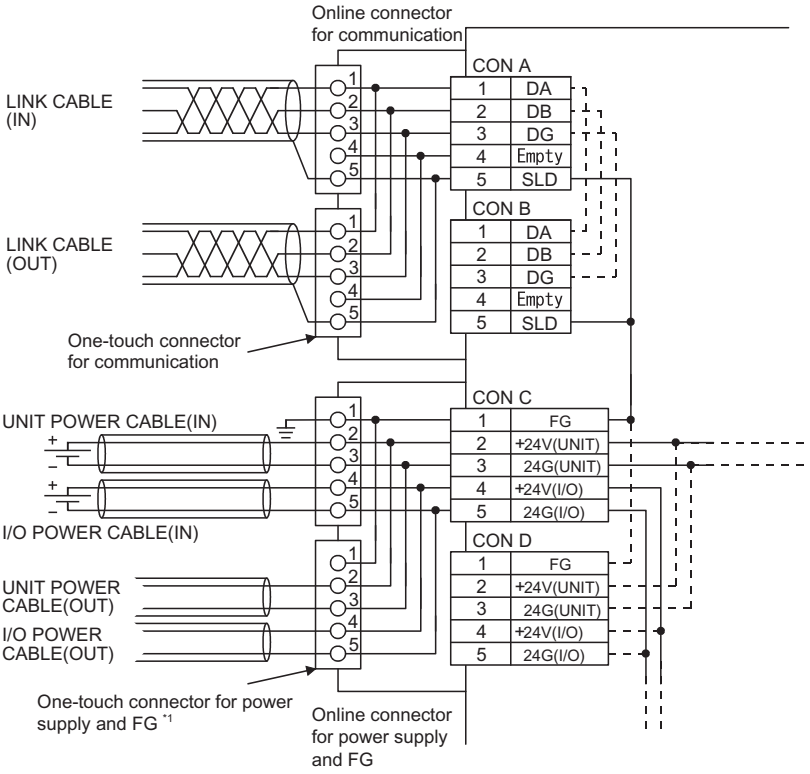

* 1: Attach an unwired connector plug to an unused one-touch connector for power supply and FG.

Pin layout

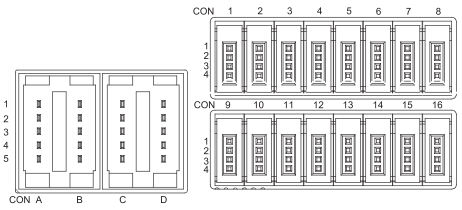

Viewed from the front of the module

5 - 55

5.4 One-Touch Connector Type Output Module

5.4.1 AJ65VBTCU2-8T transistor output module (sink type)

Item \ Type		Transistor output module	Appearance
		AJ65VBTCU2-8T	
Number of output points		8 points	
Isolation method		Photocoupler	
Rated load voltage		12/24VDC (ripple ratio: within 5%)	
Operating load voltage range		10.2 to 26.4VDC	
Max. load current		0.1A/point, 0.8A/common	
Max. inrush current		0.7A, 10ms or less	
Leakage current at OFF		0.1mA or lower	
Max. voltage drop at ON		0.1VDC or lower (TYP.) 0.1A, 0.2VDC or lower (MAX.) 0.1A	
Output type		Sink type	
Protection function		Overload protection, overvoltage protection, overheat protection	
Response time	OFF→ON	1ms or less	
	ON→OFF	1ms or less (rated load, resistive load)	
External power supply for output part	Voltage	12/24VDC (ripple ratio: within 5%) (allowable voltage range: 10.2 to 26.4VDC)	
	Current	5mA or lower (TYP., 24VDC/common)	
Surge suppressor		Zener diode	
Wiring method for common		8 points/common (2-wire, one-touch connector type)	
Number of occupied stations		32-point assignment/station (8 points used)	
Module power supply	Voltage	24VDC (ripple ratio: within 5%) (allowable voltage range: 20.4 to 26.4VDC)	
	Current	35mA or lower (at 24VDC and all points ON)	
Noise immunity		Noise voltage 500Vp-p, noise width 1μs, noise frequency 25 to 60Hz (DC type noise simulator condition)	
Withstand voltage		500VAC for 1 minute between all DC external terminals and ground	
Insulation resistance		10MΩ or higher between all DC external terminals and ground (500VDC insulation resistance tester)	
Protection degree		IP1XB	
Weight		0.15kg	
External connection system	Communication part	One-touch connector for communication [Transmission circuit] 5-pin IDC plug is sold separately. <Optional> Online connector for communication: A6CON-LJ5P	
	Power supply part	One-touch connector for power supply and FG [Module power supply, I/O power supply, FG] 5-pin IDC plug is sold separately: A6CON-PW5P, A6CON-PW5P-SOD <Optional> Online connector for power supply: A6CON-PWJ5P	
	I/O part	One-touch connector for I/O 4-pin IDC plug is sold separately.	
Applicable DIN rail		TH35-7.5Fe, TH35-7.5Al (compliant with IEC 60715 and JIS C 2812)	
Applicable wire size	Connector for communication	Applicable cable: FANC-110SBH, FA-CBL200PSBH, CS-110	
	Connector for power supply and FG	0.66 to 0.98mm^2 (18 AWG) [ϕ2.2 to 3.0mm (A6CON-PW5P), ϕ2.0 to 2.3mm (A6CON-PW5P-SOD)] Wire diameter: 0.16mm or more Insulating coating material: PVC (heat-resistant)	
	Connector for I/O	ϕ1.0 to 1.4 (A6CON-P214), ϕ1.4 to 2.0 (A6CON-P220) [Applicable wire size: 0.14 to 0.2mm^2] ϕ1.0 to 1.4 (A6CON-P514), ϕ1.4 to 2.0 (A6CON-P520) [Applicable wire size: 0.3 to 0.5mm^2]	
Accessory		User's manual	

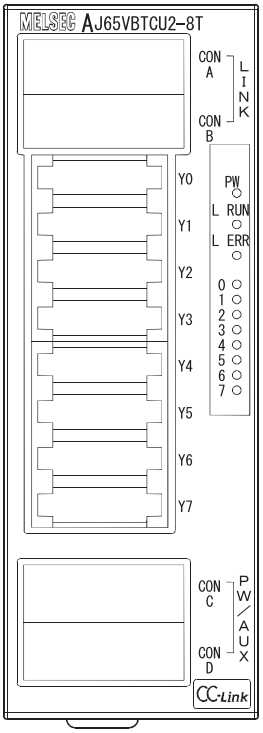

AbN
automation

External connection

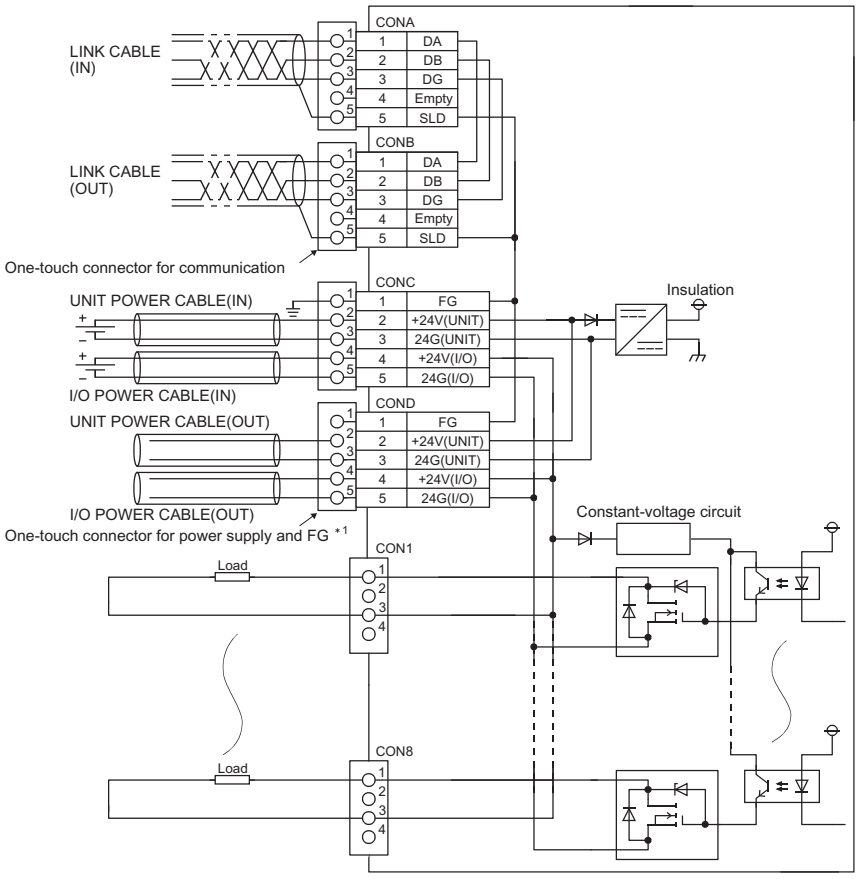

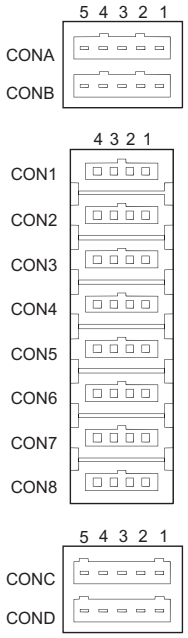

Viewed from the front of the module

Pin layout	Pin number		Signal name
	CON A, B	1	DA
		2	DB
		3	DG
		4	Empty
		5	SLD
	CON1	1	Y0
		2	Empty
		3	+24V
		4	Empty
	CON2	1	Y1
		2	Empty
		3	+24V
		4	Empty
	CON3	1	Y2
		2	Empty
		3	+24V
		4	Empty
	CON4	1	Y3
		2	Empty
		3	+24V
		4	Empty
	CON5	1	Y4
		2	Empty
		3	+24V
		4	Empty
	CON6	1	Y5
		2	Empty
		3	+24V
		4	Empty
	CON7	1	Y6
		2	Empty
		3	+24V
		4	Empty
	CON8	1	Y7
		2	Empty
		3	+24V
		4	Empty
	CON C, D	1	⏚ (FG)
		2	+24V (UNIT)
		3	24G (UNIT)
		4	+24V (I/O)
		5	24G (I/O)

* 1: Attach an unwired connector plug to an unused one-touch connector for power supply and FG.

5 - 57

External connection

<When using online connectors>

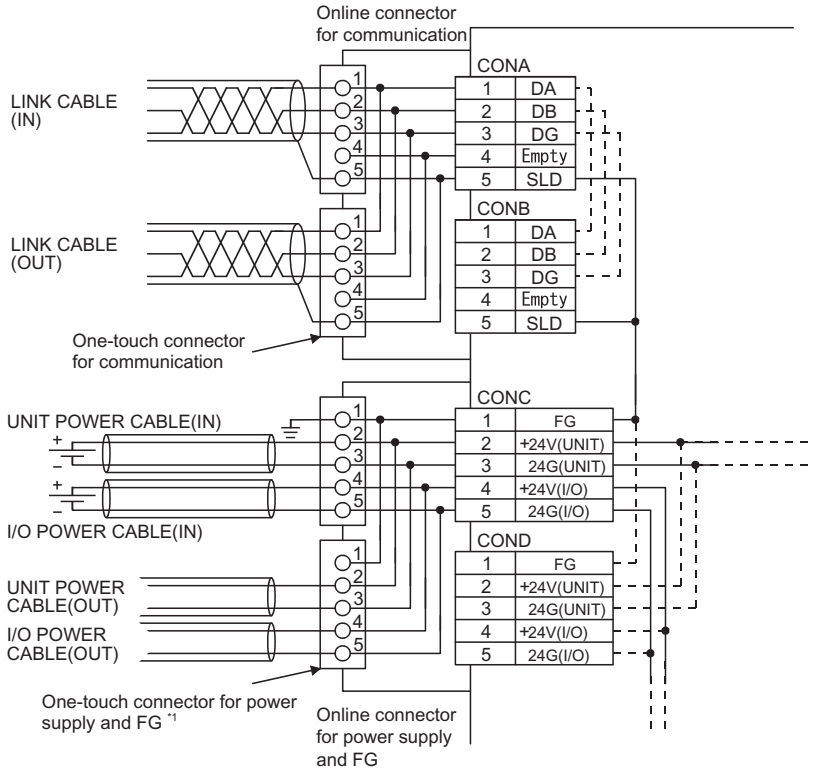

* 1: Attach an unwired connector plug to an unused one-touch connector for power supply and FG.

5 - 58

AbN
automation

5.4.2 AJ65VBTCU2-16T transistor output module (sink type)

Item \ Type		Transistor output module	
		AJ65VBTCU2-16T	Appearance
Number of output points		16 points	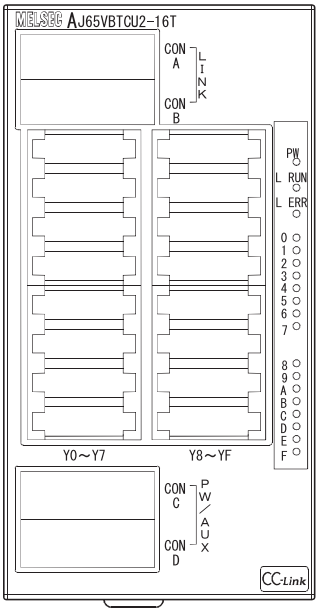
Isolation method		Photocoupler	
Rated load voltage		12/24VDC (ripple ratio: within 5%)	
Operating load voltage range		10.2 to 26.4VDC	
Max. load current		0.1A/point, 1.6A/common	
Max. inrush current		0.7A, 10ms or less	
Leakage current at OFF		0.1mA or lower	
Max. voltage drop at ON		0.1VDC or lower (TYP.) 0.1A, 0.2VDC or lower (MAX.) 0.1A	
Output type		Sink type	
Protection function		Overload protection, overvoltage protection, overheat protection	
Response time	OFF→ON	1ms or less	
	ON→OFF	1ms or less (resistive load)	
External power supply for output part	Voltage	12/24VDC (ripple ratio: within 5%) (allowable voltage range: 10.2 to 26.4VDC)	
	Current	10mA or lower (TYP. 24VDC/common), excluding external load current	
Surge suppressor		Zener diode	
Wiring method for common		16 points/common (2-wire, one-touch connector type)	
Number of occupied stations		32-point assignment/station (16 points used)	
Module power supply	Voltage	24VDC (ripple ratio: within 5%) (allowable voltage range: 20.4 to 26.4VDC)	
	Current	40mA or lower (at 24VDC and all points ON)	
Noise immunity		Noise voltage 500Vp-p, noise width 1μs, noise frequency 25 to 60Hz (DC type noise simulator condition)	
Withstand voltage		500VAC for 1 minute between all DC external terminals and ground	
Insulation resistance		10MΩ or higher between all DC external terminals and ground (500VDC insulation resistance tester)	
Protection degree		IP1XB	
Weight		0.19kg	
External connection system	Communication part	One-touch connector for communication [Transmission circuit] 5-pin IDC plug is sold separately. <Optional> Online connector for communication: A6CON-LJ5P	
	Power supply part	One-touch connector for power supply and FG [Module power supply, I/O power supply, FG] 5-pin IDC plug is sold separately: A6CON-PW5P, A6CON-PW5P-SOD <Optional> Online connector for power supply: A6CON-PWJ5P	
	I/O part	One-touch connector for I/O 4-pin IDC plug is sold separately.	
Applicable DIN rail		TH35-7.5Fe, TH35-7.5Al (compliant with IEC 60715 and JIS C 2812)	
Applicable wire size	Connector for communication	Applicable cable: FANC-110SBH, FA-CBL200PSBH, CS-110	
	Connector for power supply and FG	0.66 to 0.98mm^2 (18 AWG) [ϕ2.2 to 3.0mm (A6CON-PW5P), ϕ2.0 to 2.3mm (A6CON-PW5P-SOD)] Wire diameter: 0.16mm or more Insulating coating material: PVC (heat-resistant)	
	Connector for I/O	ϕ1.0 to 1.4 (A6CON-P214), ϕ1.4 to 2.0 (A6CON-P220) [Applicable wire size: 0.14 to 0.2mm^2] ϕ1.0 to 1.4 (A6CON-P514), ϕ1.4 to 2.0 (A6CON-P520) [Applicable wire size: 0.3 to 0.5mm^2]	
Accessory		User's manual	

5 - 59

External connection

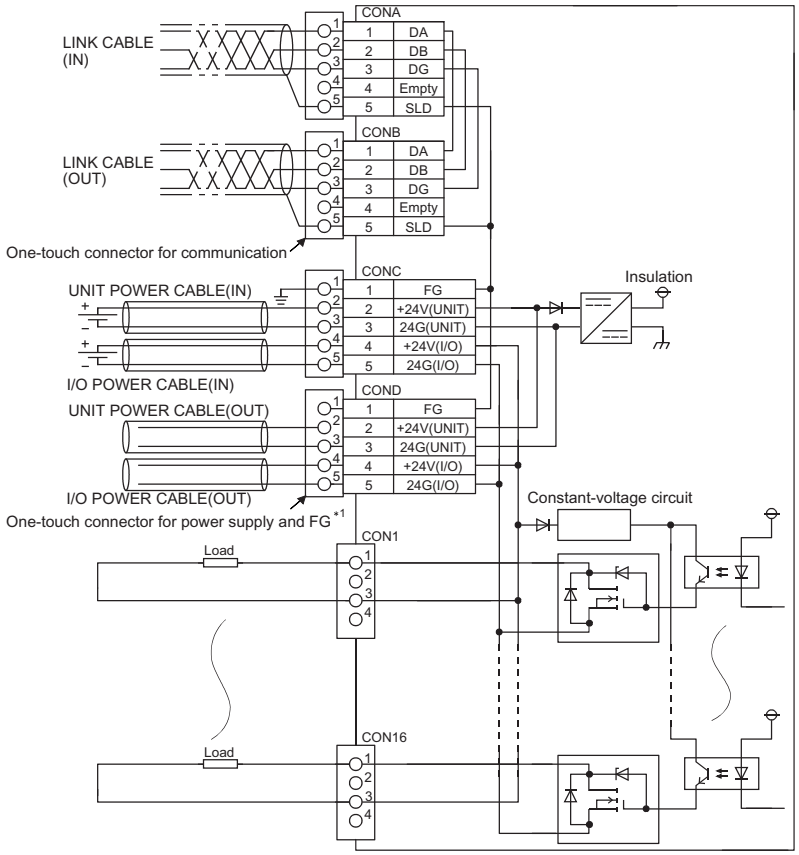

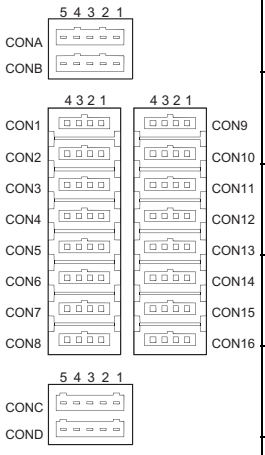

Viewed from the front of the module

Pin layout	Pin number		Signal name
	CON A, B	1	DA
		2	DB
		3	DG
		4	Empty
		5	SLD
	CON 1	1	Y0
		2	Empty
		3	+24V
		4	Empty
	CON 2	1	Y1
		2	Empty
		3	+24V
		4	Empty
	CON 3	1	Y2
		2	Empty
		3	+24V
		4	Empty
	CON 4	1	Y3
		2	Empty
		3	+24V
		4	Empty
	CON 5	1	Y4
		2	Empty
		3	+24V
		4	Empty
	CON 6	1	Y5
		2	Empty
		3	+24V
		4	Empty
	CON 7	1	Y6
		2	Empty
		3	+24V
		4	Empty
	CON 8	1	Y7
		2	Empty
		3	+24V
		4	Empty
	CON 9	1	Y8
		2	Empty
		3	+24V
		4	Empty
	CON 10	1	Y9
		2	Empty
		3	+24V
		4	Empty
	CON 11	1	YA
		2	Empty
		3	+24V
		4	Empty
	CON 12	1	YB
		2	Empty
		3	+24V
		4	Empty
	CON 13	1	YC
		2	Empty
		3	+24V
		4	Empty
	CON 14	1	YD
		2	Empty
		3	+24V
		4	Empty
	CON 15	1	YE
		2	Empty
		3	+24V
		4	Empty
	CON 16	1	YF
		2	Empty
		3	+24V
		4	Empty
	CON C, D	1	⏚ (FG)
		2	+24V (UNIT)
		3	24G (UNIT)
		4	+24V (I/O)
		5	24G (I/O)

* 1: Attach an unwired connector plug to an unused one-touch connector for power supply and FG.

5 - 60

AbN
automation

External connection

<When using online connectors>

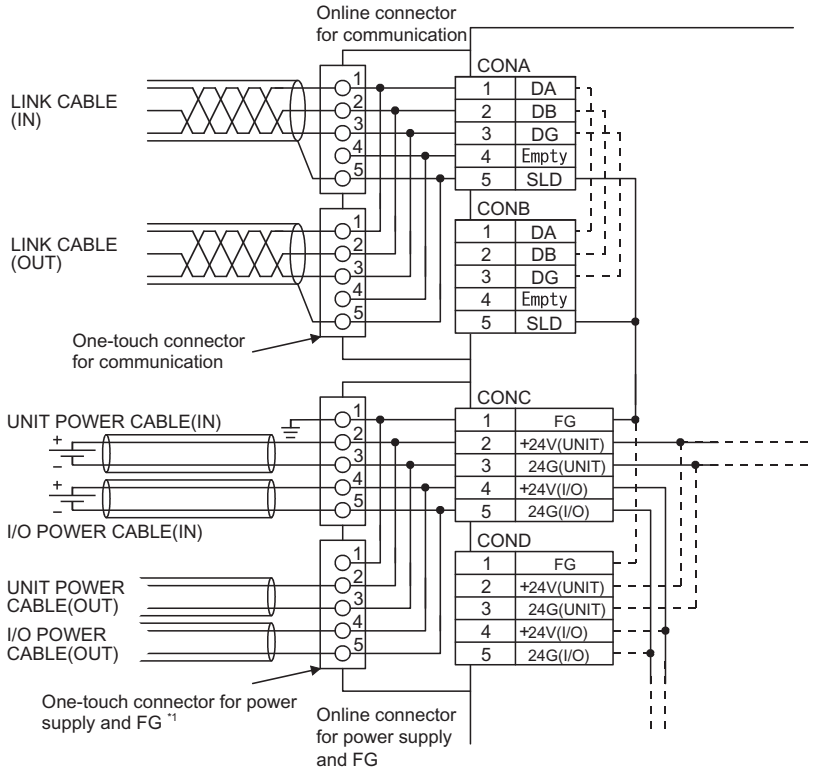

* 1: Attach an unwired connector plug to an unused one-touch connector for power supply and FG.

5 - 61

5.4.3 AJ65SBTC1-32T transistor output module (sink type)

Item			Type: Transistor output module AJ65SBTC1-32T	Appearance
Number of output points			32 points	
Isolation method			Photocoupler	
Rated load voltage			12/24VDC (ripple ratio: within 5%)	
Operating load voltage range			10.2 to 26.4VDC	
Max. load current			0.1A/point, 3.2A/common	
Max. inrush current			1.0A, 10ms or less	
Leakage current at OFF			0.25mA or lower	
Max. voltage drop at ON			0.3VDC or lower (TYP.) 0.1A, 0.6VDC or lower (MAX.) 0.1A	
Output type			Sink type	
Protection function			Overload protection, overvoltage protection, overheat protection	
Response time		OFF→ON	0.5ms or less	
		ON→OFF	1.5ms or less (resistive load)	
External power supply for output part		Voltage	12/24VDC (ripple ratio: within 5%) (allowable voltage range: 10.2 to 26.4VDC)	
		Current	50mA or lower (TYP. 24VDC/common), excluding external load current	
Surge suppressor			Zener diode	
Wiring method for common			32 points/common (1-wire, one-touch connector type)	
Number of occupied stations			32-point assignment/station (32 points used)	
Module power supply		Voltage	24VDC (ripple ratio: within 5%) (allowable voltage range: 20.4 to 26.4VDC)	
		Current	60mA or lower (at 24VDC and all points ON)	
Noise immunity			Noise voltage 500Vp-p, noise width 1μs, noise frequency 25 to 60Hz (DC type noise simulator condition)	
Withstand voltage			500VAC for 1 minute between all DC external terminals and ground	
Insulation resistance			10MΩ or higher between all DC external terminals and ground (500VDC insulation resistance tester)	
Protection degree			IP2X	
Weight			0.16kg	
External connection system	Communication part, module power supply part		7-point two-piece terminal block [Transmission circuit, module power supply, FG] M3×5.2 screw (tightening torque range: 0.59 to 0.88N•m) Applicable solderless terminal: 2 or less	
	I/O power supply part		2-point direct-mount terminal block [I/O power supply] M3×5.2 screw (tightening torque range: 0.59 to 0.88N•m) Applicable solderless terminal: 2 or less	
	I/O part		Dedicated one-touch connector [I/O signals] 4-pin IDC plug is sold separately.	
Module mounting screw			M4 screw with plain washer finished round (tightening torque range: 0.78 to 1.08N•m) Mountable with a DIN rail in 6 orientations	
Applicable DIN rail			TH35-7.5Fe, TH35-7.5Al (compliant with IEC 60715 and JIS C 2812)	
Applicable wire size	Communication part, module power supply part	Applicable solderless terminal	• RAV1.25-3 (compliant with JIS C 2805) [Applicable wire size: 0.3 to 1.25mm^2 (22 to 16 AWG) stranded wire] • V2-MS3, RAP2-3SL, TGV2-3N [Applicable wire size: 1.25 to 2.0mm^2 (16 to 14 AWG) stranded wire]	
	I/O power supply part			
	I/O part		ϕ1.0 to 1.4 (A6CON-P214), ϕ1.4 to 2.0 (A6CON-P220) [Applicable wire size: 0.14 to 0.2mm^2 (26 to 24 AWG) stranded wire] ϕ1.0 to 1.4 (A6CON-P514), ϕ1.4 to 2.0 (A6CON-P520) [Applicable wire size: 0.3 to 0.5 mm^2 (22 to 20 AWG) stranded wire]	
Wire	Material		Copper	
	Temperature rating		75°C or more	
Accessory			User's manual	

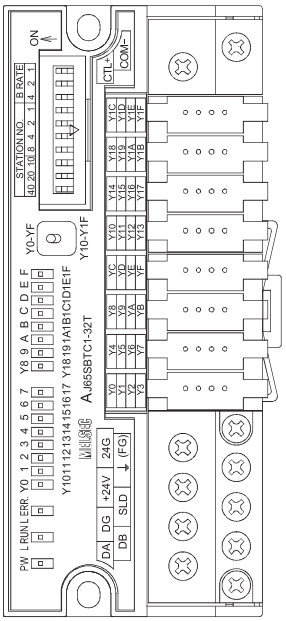

* For applicable solderless terminals connected to the terminal block, refer to the table above. Use applicable wires for the solderless terminals and fix them with an appropriate tightening torque. Use UL listed solderless terminals and, for crimping, use a tool recommended by their manufacturer.

5 - 62

AbN
automation

External connection

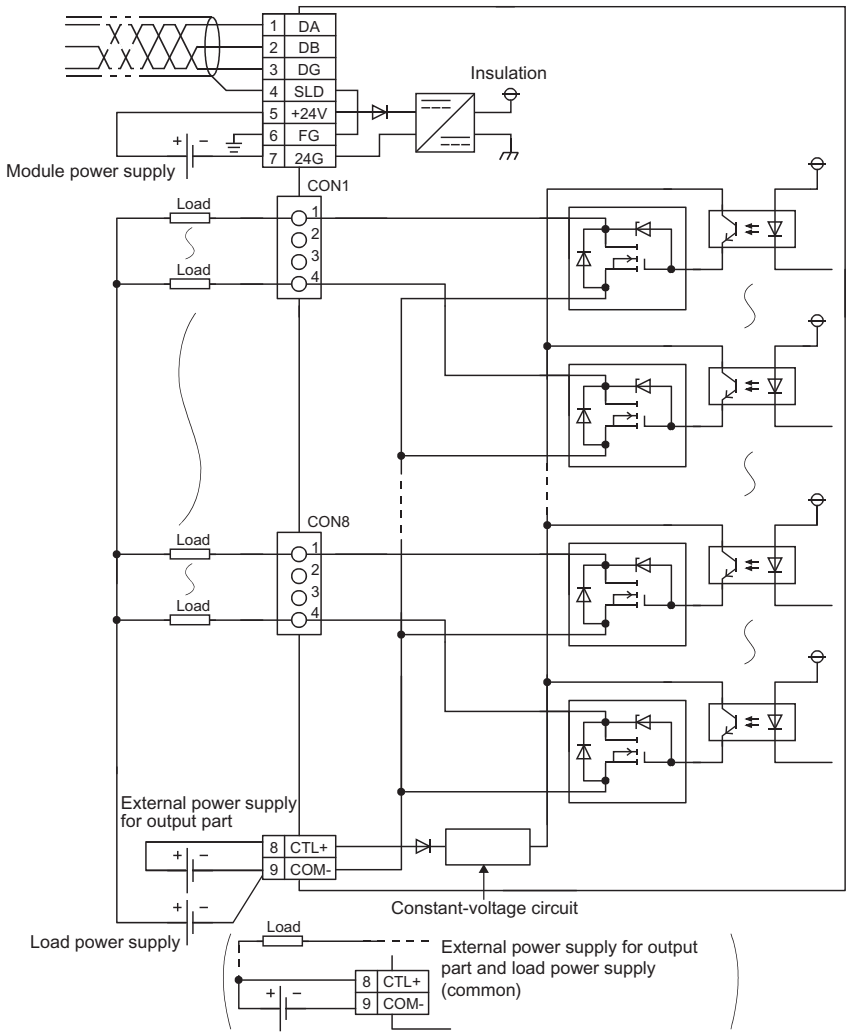

Terminal number		Signal name
TB1		DA
TB2		DB
TB3		DG
TB4		SLD
TB5		+24V
TB6		⏚ (FG)
TB7		24G
Pin number		Signal name
CON1	1	Y0
	2	Y1
	3	Y2
	4	Y3
CON2	1	Y4
	2	Y5
	3	Y6
	4	Y7
CON3	1	Y8
	2	Y9
	3	YA
	4	YB
CON4	1	YC
	2	YD
	3	YE
	4	YF
CON5	1	Y10
	2	Y11
	3	Y12
	4	Y13
CON6	1	Y14
	2	Y15
	3	Y16
	4	Y17
CON7	1	Y18
	2	Y19
	3	Y1A
	4	Y1B
CON8	1	Y1C
	2	Y1D
	3	Y1E
	4	Y1F
Terminal number		Signal name
TB8		CLT+
TB9		COM-

Pin layout

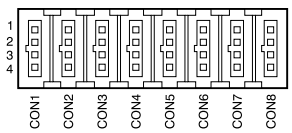

Viewed from the front of the module

5 - 63

5.4.4 AJ65SBTC1-32T1 transistor output module (sink type)

Item \ Type			Transistor output module: AJ65SBTC1-32T1	Appearance
Number of output points			32 points	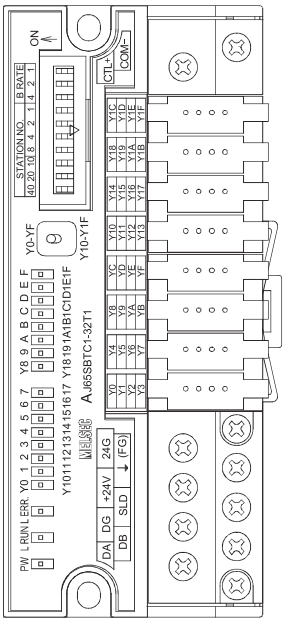
Isolation method			Photocoupler	
Rated load voltage			12/24VDC (ripple ratio: within 5%)	
Operating load voltage range			10.2 to 26.4VDC	
Max. load current			0.1A/point, 3.2A/common	
Max. inrush current			1.0A, 10ms or less	
Leakage current at OFF			0.1mA or lower	
Max. voltage drop at ON			0.3VDC or lower (TYP.) 0.1A, 0.6VDC or lower (MAX.) 0.1A	
Output type			Sink type	
Protection function			None	
Response time		OFF→ON	0.5ms or less	
		ON→OFF	1.5ms or less (resistive load)	
External power supply for output part		Voltage	12/24VDC (ripple ratio: within 5%) (allowable voltage range: 10.2 to 26.4VDC)	
		Current	50mA or lower (TYP. 24VDC/common), excluding external load current	
Surge suppressor			Zener diode	
Wiring method for common			32 points/common (1-wire, one-touch connector type)	
Number of occupied stations			32-point assignment/station (32 points used)	
Module power supply		Voltage	24VDC (ripple ratio: within 5%) (allowable voltage range: 20.4 to 26.4VDC)	
		Current	60mA or lower (at 24VDC and all points ON)	
Noise immunity			Noise voltage 500Vp-p, noise width 1μs, noise frequency 25 to 60Hz (DC type noise simulator condition)	
Withstand voltage			500VAC for 1 minute between all DC external terminals and ground	
Insulation resistance			10MΩ or higher between all DC external terminals and ground (500VDC insulation resistance tester)	
Protection degree			IP2X	
Weight			0.16kg	
External connection system	Communication part, module power supply part		7-point two-piece terminal block [Transmission circuit, module power supply, FG] M3×5.2 screw (tightening torque range: 0.59 to 0.88N•m) Applicable solderless terminal: 2 or less	
	I/O power supply part		2-point direct-mount terminal block [I/O power supply] M3×5.2 screw (tightening torque range: 0.59 to 0.88N•m) Applicable solderless terminal: 2 or less	
	I/O part		Dedicated one-touch connector [I/O signals] 4-pin IDC plug is sold separately.	
Module mounting screw			M4 screw with plain washer finished round (tightening torque range: 0.78 to 1.08N•m) Mountable with a DIN rail in 6 orientations	
Applicable DIN rail			TH35-7.5Fe, TH35-7.5Al (compliant with IEC 60715 and JIS C 2812)	
Applicable wire size	Communication part, module power supply part	Applicable solderless terminal	• RAV1.25-3 (compliant with JIS C 2805) [Applicable wire size: 0.3 to 1.25mm^2 (22 to 16 AWG) stranded wire] • V2-MS3, RAP2-3SL, TGV2-3N [Applicable wire size: 1.25 to 2.0mm^2 (16 to 14 AWG) stranded wire]	
	I/O power supply part			
	I/O part		ϕ1.0 to 1.4 (A6CON-P214), ϕ1.4 to 2.0 (A6CON-P220) [Applicable wire size: 0.14 to 0.2mm^2 (26 to 24 AWG) stranded wire] ϕ1.0 to 1.4 (A6CON-P514), ϕ1.4 to 2.0 (A6CON-P520) [Applicable wire size: 0.3 to 0.5 mm^2 (22 to 20 AWG) stranded wire]	
Wire	Material		Copper	
	Temperature rating		75°C or more	
Accessory			User's manual	

* For applicable solderless terminals connected to the terminal block, refer to the table above. Use applicable wires for the solderless terminals and fix them with an appropriate tightening torque. Use UL listed solderless terminals and, for crimping, use a tool recommended by their manufacturer.

5 - 64

AbN
automation

External connection

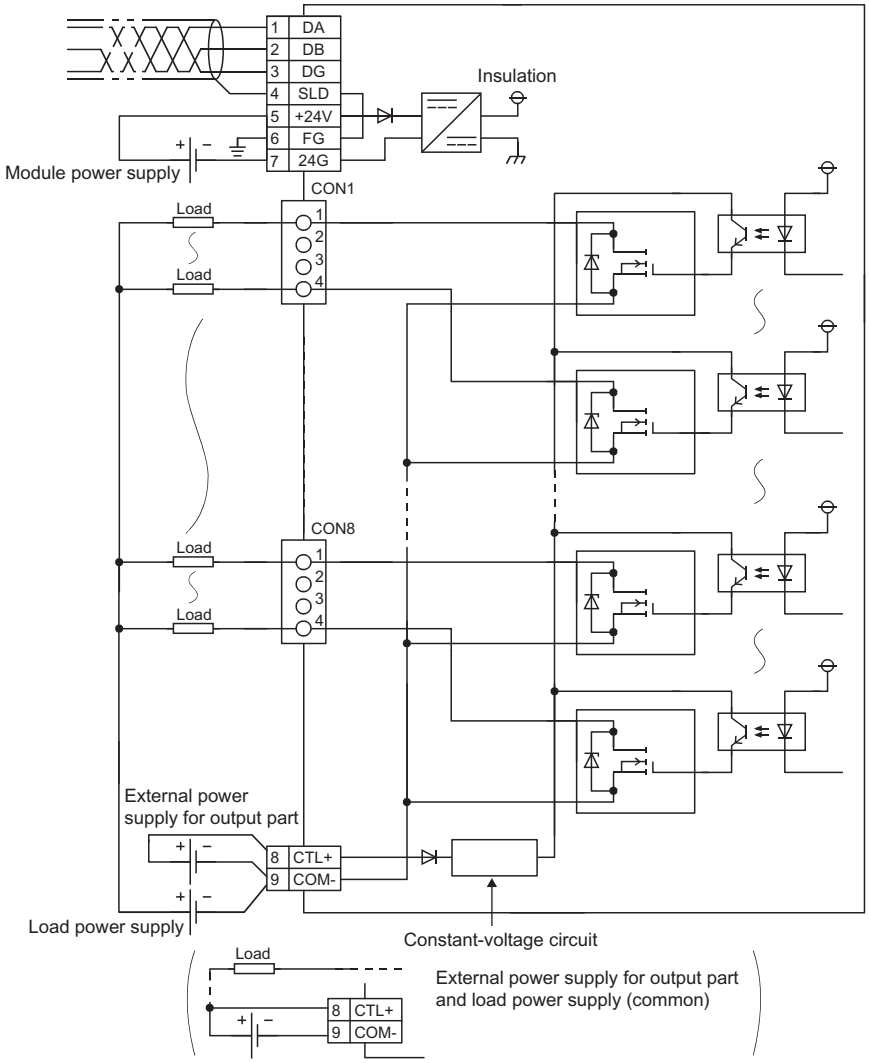

Terminal number		Signal name
TB1		DA
TB2		DB
TB3		DG
TB4		SLD
TB5		+24V
TB6		⏚ (FG)
TB7		24G
Pin number		Signal name
CON1	1	Y0
	2	Y1
	3	Y2
	4	Y3
CON2	1	Y4
	2	Y5
	3	Y6
	4	Y7
CON3	1	Y8
	2	Y9
	3	YA
	4	YB
CON4	1	YC
	2	YD
	3	YE
	4	YF
CON5	1	Y10
	2	Y11
	3	Y12
	4	Y13
CON6	1	Y14
	2	Y15
	3	Y16
	4	Y17
CON7	1	Y18
	2	Y19
	3	Y1A
	4	Y1B
CON8	1	Y1C
	2	Y1D
	3	Y1E
	4	Y1F
Terminal number		Signal name
TB8		CLT+
TB9		COM-

Pin layout

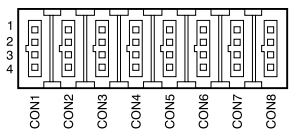

Viewed from the front of the module

5 - 65

5.5 FCN Connector Type Output Module

5.5.1 AJ65SBTCF1-32T type transistor output module (sink type)

Item \ Type			Triac output module AJ65SBTCF1-32T	Appearance
Number of output points			32 points	
Isolation method			Photocoupler	
Rated load voltage			12/24VDC (ripple ratio: within 5%)	
Operating load voltage range			10.2 to 26.4VDC	
Max. load current			0.1A/point, 3.2A/common	
Max. inrush current			1.0A, 10ms or less	
Leakage current at OFF			0.1mA or lower	
Max. voltage drop at ON			0.1VDC or lower (TYP.) 0.1A, 0.2VDC or lower (MAX.) 0.1A	
Output type			Sink type	
Protection function			Overload protection, overvoltage protection, overheat protection	
Response time	OFF→ON		0.5ms or less	
	ON→OFF		1.5ms or less (resistive load)	
External power supply for output part	Voltage		12/24VDC (ripple ratio: within 5%) (allowable voltage range: 10.2 to 26.4VDC)	
	Current		50mA or lower (TYP. 24VDC/common), excluding external load current	
Surge suppressor			Zener diode	
Wiring method for common			32 points/common (1-wire, FCN connector type)	
Number of occupied stations			32-point assignment/station (32 points used)	
Module power supply	Voltage		24VDC (ripple ratio: within 5%) (allowable voltage range: 20.4 to 26.4VDC)	
	Current		60mA or lower (at 24VDC and all points ON)	
Noise immunity			Noise voltage 500Vp-p, noise width 1μs, noise frequency 25 to 60Hz (DC type noise simulator condition)	
Withstand voltage			500VAC for 1 minute between all DC external terminals and ground	
Insulation resistance			10MΩ or higher between all DC external terminals and ground (500VDC insulation resistance tester)	
Weight			0.15kg	
External connection system	Communication part, module power supply part		7-point two-piece terminal block [Transmission circuit, module power supply, FG] M3×5.2 screw (tightening torque range: 0.59 to 0.88N•m) Applicable solderless terminal: 2 or less	
	I/O power supply part, I/O part		40-pin connector [I/O power supply, I/O signal] (A6CON1, A6CON2, A6CON3, A6CON4)	
Module mounting screw			M4 screw with plain washer finished round (tightening torque range: 0.78 to 1.08N•m) Mountable with a DIN rail in 6 orientations	
Applicable DIN rail			TH35-7.5Fe, TH35-7.5Al (compliant with IEC 60715 and JIS C 2812)	
Applicable wire size	Communication part, module power supply part	Applicable solderless terminal*1	• RAV1.25-3 (compliant with JIS C 2805) [Applicable wire size: 0.3 to 1.25mm^2 (22 to 16 AWG) stranded wire] • V2-MS3, RAP2-3SL, TGV2-3N [Applicable wire size: 1.25 to 2.0mm^2 (16 to 14 AWG) stranded wire]	
	I/O power supply part, I/O part		• 0.08 to 0.3mm^2 (28 to 22 AWG) stranded wire (A6CON1 and A6CON4)*2 • 0.08 to 0.2mm^2 (28 to 24 AWG) stranded wire (A6CON2) • 0.08mm^2 (28 AWG) stranded wire, ϕ0.25mm (30 AWG) single wire (A6CON3)	
Wire	Material		Copper	
	Temperature rating		75°C or more	
Applicable connector/ terminal block conversion module			A6TBXY36, A6TBXY54	
Accessory			User's manual	

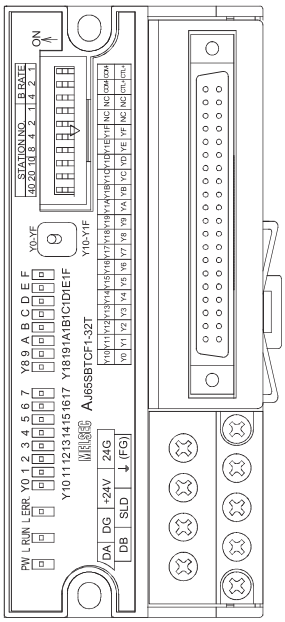

*1 For applicable solderless terminals connected to the terminal block, refer to the table above. Use applicable wires for the solderless terminals and fix them with an appropriate tightening torque. Use UL listed solderless terminals and, for crimping, use a tool recommended by their manufacturer.

*2 Use cables with outside diameter of 1.3mm or shorter to connect 40 cables to the connector. In addition, consider the amount of current to be used and select appropriate cables.

AbN
automation

External connection

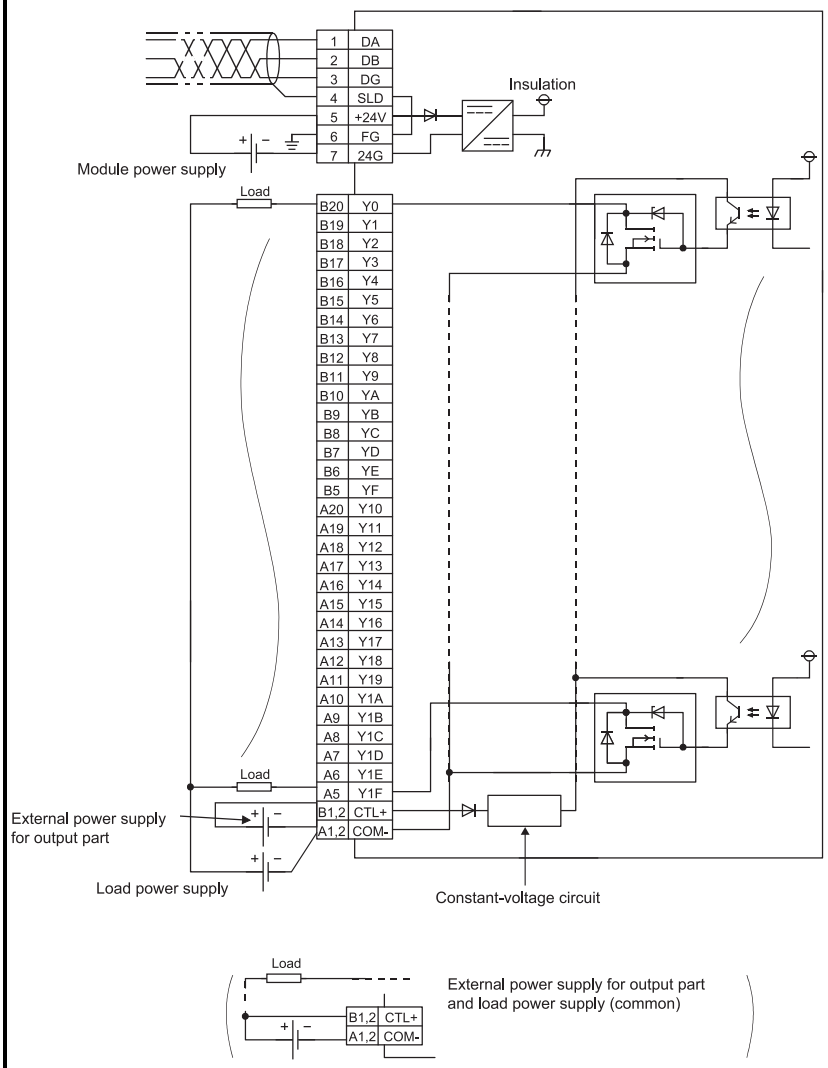

Pin layout

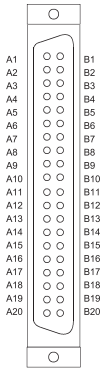

Viewed from the front of the module

Terminal number	Signal name
TB1	DA
TB2	DB
TB3	DG
TB4	SLD
TB5	+24V
TB6	⏚ (FG)
TB7	24G

Pin number	Signal name	Pin number	Signal name
B20	Y0	A20	Y10
B19	Y1	A19	Y11
B18	Y2	A18	Y12
B17	Y3	A17	Y13
B16	Y4	A16	Y14
B15	Y5	A15	Y15
B14	Y6	A14	Y16
B13	Y7	A13	Y17
B12	Y8	A12	Y18
B11	Y9	A11	Y19
B10	YA	A10	Y1A
B9	YB	A9	Y1B
B8	Y0	A8	Y1C
B7	YD	A7	Y1D
B6	YE	A6	Y1E
B5	YF	A5	Y1F
B4	Empty	A4	Empty
B3	Empty	A3	Empty
B2	CTL+	A2	COM-
B1	CTL+	A1	COM-

5 - 67

5.6 Waterproof Type Output Module

5.6.1 AJ65FBTA2-16T transistor output module (sink type)

Item \ Type		Transistor output module	
		AJ65FBTA2-16T	Appearance
Number of output points		16 points	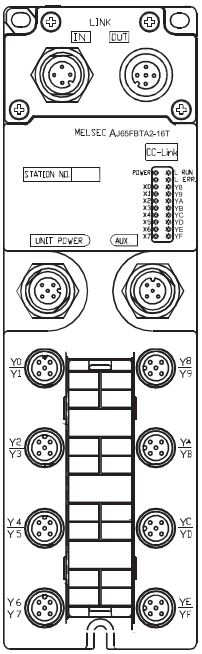
Isolation method		Photocoupler	
Rated load voltage		12/24VDC (ripple ratio: within 5%)	
Operating load voltage range		10.2 to 28.8VDC	
Max. load current		0.5A/point, 4A/common	
Max. inrush current		1.0A, 10ms or less	
Leakage current at OFF		0.25mA or lower	
Max. voltage drop at ON		0.15VDC or lower (TYP.) 0.5A, 0.25VDC or lower (MAX.) 0.5A	
Output type		Sink type	
Protection function		Overload protection, overheat protection	
Response time	OFF→ON	0.5ms or less	
	ON→OFF	1.5ms or less (resistive load)	
External power supply for output part	Voltage	12/24VDC (ripple ratio: within 5%) (allowable voltage range: 10.2 to 28.8VDC)	
	Current	20mA or lower (at 24VDC and all points ON), excluding external load current	
Surge suppressor		Zener diode	
Wiring method for common		16 points/common (2-wire, waterproof connector type)	
Number of occupied stations		32-point assignment/station (16 points used)	
Module power supply	Voltage	24VDC (ripple ratio: within 5%) (allowable voltage range: 20.4 to 26.4VDC)	
	Current	50mA or lower (at 24VDC and all points ON)	
Noise immunity		Noise voltage 500Vp-p, noise width 1μs, noise frequency 25 to 60Hz (DC type noise simulator condition)	
Withstand voltage		500VAC for 1 minute between all DC external terminals and ground	
Insulation resistance		10MΩ or higher between all DC external terminals and ground (500VDC insulation resistance tester)	
Protection degree		IP67	
Weight		0.40kg	
Accessory		User's manual	
Optional item		Waterproof cap: A6CAP-WP2 (20 pieces)	
Other connecting devices		Refer to Section 1.6.1.	

5 - 68

AbN
automation

External connection

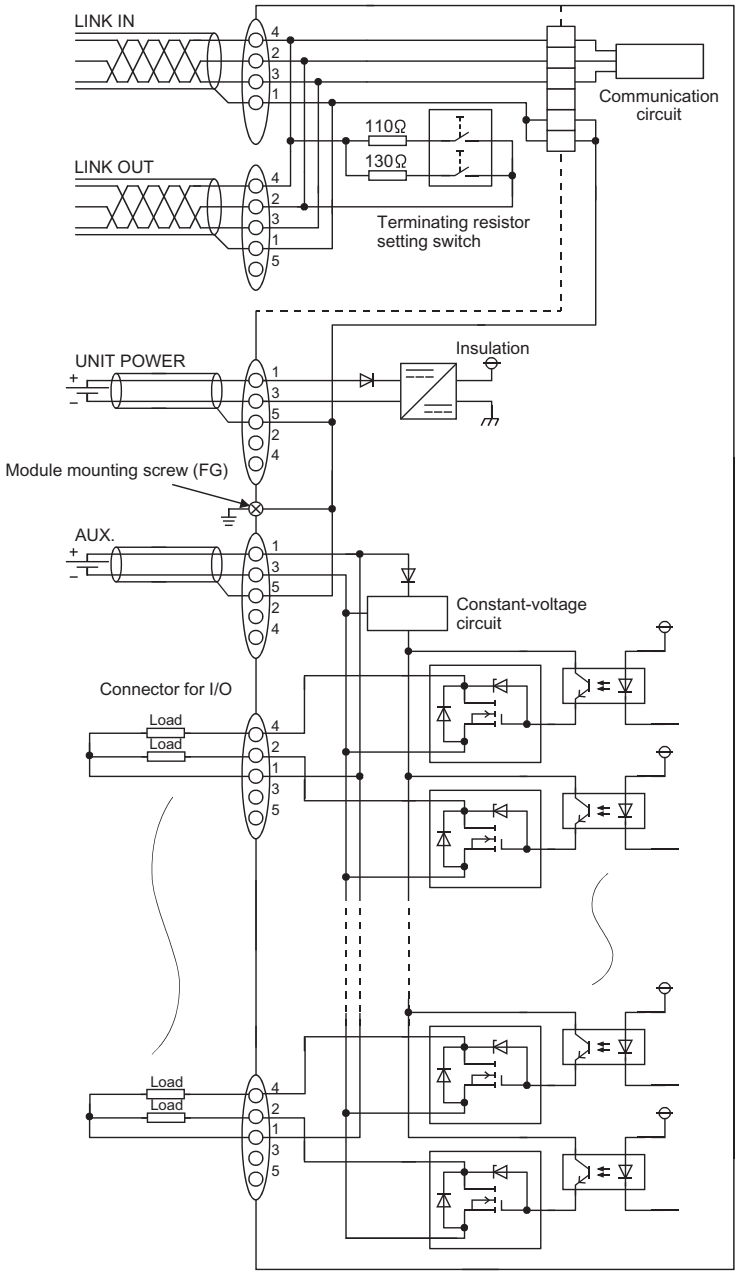

Pin layout

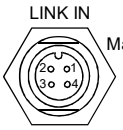

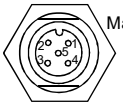

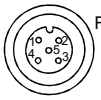

Front view

Connector for communication

Pin number	LINK IN	LINK OUT
1	SLD	SLD
2	DB	DB
3	DG	DG
4	DA	DA
5	No pins	Empty

Connector for power supply

Pin number	UNIT POWER	AUX.
1	+24V(UNIT)	+24V(I/O)
2	Empty	Empty
3	24G(UNIT)	24G(I/O)
4	Empty	Empty
5	⏚ (FG)	⏚ (FG)

Connector for I/O

	Pin number	Signal name		Pin number	Signal name
Y0/Y1	1	+24V	Y8/Y9	1	+24V
	2	Y1		2	Y9
	3	Empty		3	Empty
	4	Y0		4	Y8
	5	Empty		5	Empty
Y2/Y3	1	+24V	YA/YB	1	+24V
	2	Y3		2	YB
	3	Empty		3	Empty
	4	Y2		4	YA
	5	Empty		5	Empty
Y4/Y5	1	+24V	YC/YD	1	+24V
	2	Y5		2	YD
	3	Empty		3	Empty
	4	Y4		4	YC
	5	Empty		5	Empty
Y6/Y7	1	+24V	YE/YF	1	+24V
	2	Y7		2	YF
	3	Empty		3	Empty
	4	Y6		4	YE
	5	Empty		5	Empty

5 - 69

5.6.2 AJ65FBTA2-16TE transistor output module (source type)

Item \ Type		Transistor output module	
		AJ65FBTA2-16TE	Appearance
Number of output points		16 points	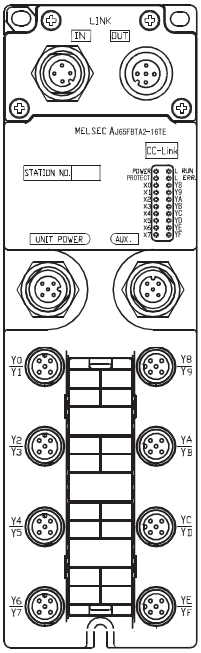
Isolation method		Photocoupler	
Rated load voltage		12/24VDC (ripple ratio: within 5%)	
Operating load voltage range		10.2 to 28.8VDC	
Max. load current		1.0A/point, 4A/common	
Max. inrush current		2.0A, 10ms or less	
Leakage current at OFF		0.3mA or lower	
Max. voltage drop at ON		0.15VDC or lower (TYP.) 1.0A, 0.2VDC or lower (MAX.) 1.0A	
Output type		Source type	
Protection function		Overload protection, overheat protection (The LED turns on when any protection is activated.)	
Response time	OFF→ON	0.5ms or less	
	ON→OFF	1.5ms or less (resistive load)	
External power supply for output part	Voltage	12/24VDC (ripple ratio: within 5%) (allowable voltage range: 10.2 to 28.8VDC)	
	Current	30mA or lower (at 24VDC and all points ON), excluding external load current	
Surge suppressor		Zener diode	
Wiring method for common		16 points/common (2-wire, waterproof connector type)	
Number of occupied stations		32-point assignment/station (16 points used)	
Module power supply	Voltage	24VDC (ripple ratio: within 5%) (allowable voltage range: 20.4 to 26.4VDC)	
	Current	50mA or lower (at 24VDC and all points ON)	
Noise immunity		Noise voltage 500Vp-p, noise width 1μs, noise frequency 25 to 60Hz (DC type noise simulator condition)	
Withstand voltage		500VAC for 1 minute between all DC external terminals and ground	
Insulation resistance		10MΩ or higher between all DC external terminals and ground (500VDC insulation resistance tester)	
Protection degree		IP67	
Weight		0.40kg	
Accessory		User's manual	
Optional item		Waterproof cap: A6CAP-WP2 (20 pieces)	
Other connecting devices		Refer to Section 1.6.1.	

5 - 70

AbN
automation

External connection

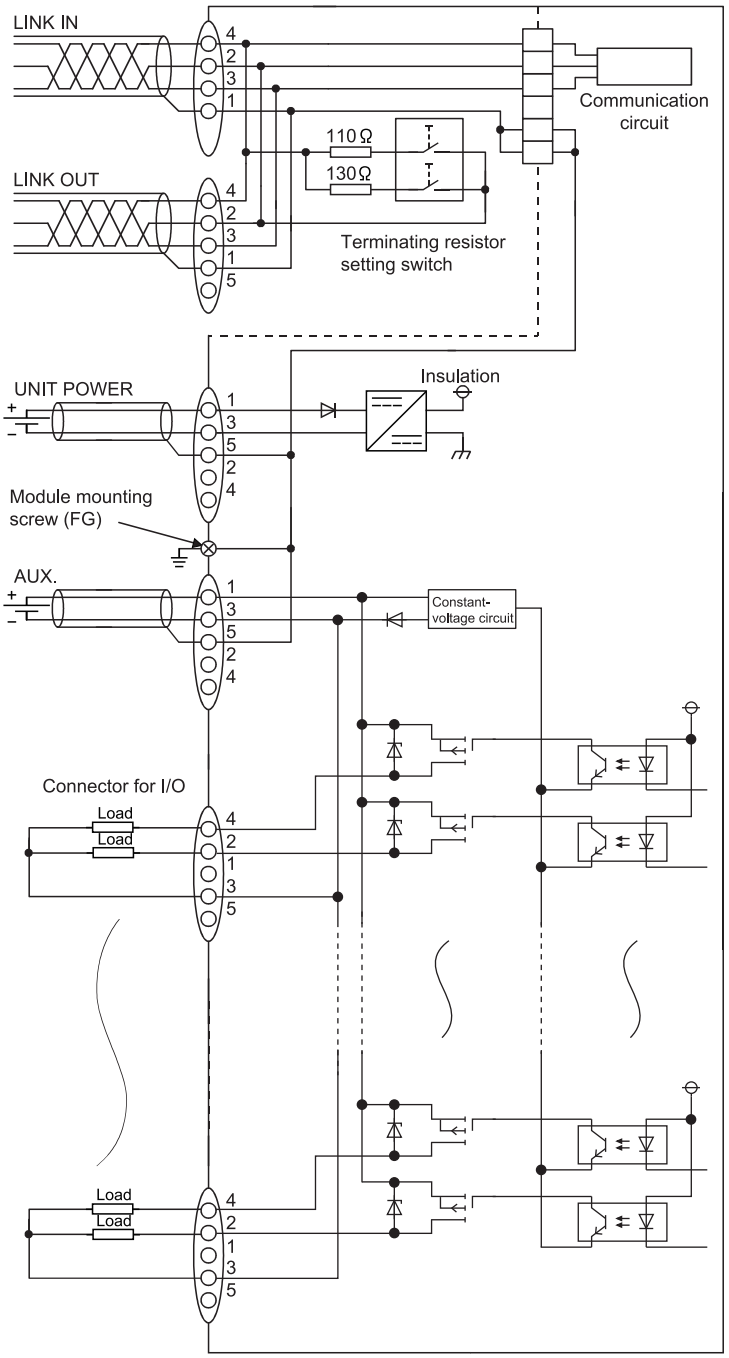

Pin layout

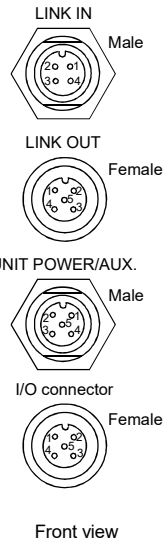

Front view

Connector for communication

Pin number	LINK IN	LINK OUT
1	SLD	SLD
2	DB	DB
3	DG	DG
4	DA	DA
5	No pins	Empty

Connector for power supply

Pin number	UNIT POWER	AUX.
1	+24V(UNIT)	+24V(I/O)
2	Empty	Empty
3	24G(UNIT)	24G(I/O)
4	Empty	Empty
5	⏚ (FG)	⏚ (FG)

Connector for I/O

	Pin number	Signal name		Pin number	Signal name
Y0/Y1	1	Empty	Y8/Y9	1	Empty
	2	Y1		2	Y9
	3	24G		3	24G
	4	Y0		4	Y8
	5	Empty		5	Empty
Y2/Y3	1	Empty	YA/YB	1	Empty
	2	Y3		2	YB
	3	24G		3	24G
	4	Y2		4	YA
	5	Empty		5	Empty
Y4/Y5	1	Empty	YC/YD	1	Empty
	2	Y5		2	YD
	3	24G		3	24G
	4	Y4		4	YC
	5	Empty		5	Empty
Y6/Y7	1	Empty	YE/YF	1	Empty
	2	Y7		2	YF
	3	24G		3	24G
	4	Y6		4	YE
	5	Empty		5	Empty

5 - 71

MEMO

5 - 72

AbN
automation

6 SPECIFICATIONS FOR COMBINED MODULES

This chapter describes the specifications for a combined module that can be connected to the CC-Link system.

6.1 Terminal Block Type Combined Module

6.1.1 AJ65SBTB32-8DT combined module

Item \ Type		DC input transistor output combined module: AJ65SBTB32-8DT			Appearance
Input			Output		
Number of input points		4 points	Number of output points	4 points	
Isolation method		Photocoupler	Isolation method	Photocoupler	
Rated input voltage		24VDC (ripple ratio: within 5%)	Rated load voltage	24VDC (ripple ratio: within 5%)	
Rated input current		Approx. 7mA	Operating load voltage range	19.2 to 26.4VDC	
Operating voltage range		19.2 to 26.4VDC	Max. load current	0.5A/point, 1.2A/common	
Max. number of simultaneous input points		100%	Max. inrush current	1.0A, 10ms or less	
ON voltage/ON current		14VDC or higher/ 3.5mA or higher	Leakage current at OFF	0.25mA or lower	
OFF voltage/OFF current		6VDC or lower/ 1.7mA or lower	Max. voltage drop at ON	0.3VDC or lower (TYP.) 0.5A, 0.6VDC or lower (MAX.) 0.5A	
Input resistance		Approx. 3.3kΩ	Output type	Sink type	
			Protection function	Overload protection, overvoltage protection, overheat protection	
Response time	OFF→ON	1.5ms or less (at 24VDC)	Response time OFF→ON	0.5ms or less	
	ON→OFF	1.5ms or less (at 24VDC)	ON→OFF	1.5ms or less (resistive load)	
			External power supply for output part: Voltage	24VDC (ripple ratio: within 5%) (allowable voltage range: 19.2 to 26.4VDC)	
			External power supply for output part: Current	14.6mA or lower (at 24VDC and all points ON), excluding external load current	
Input type		Positive common (sink type)	Surge suppressor	Zener diode	
Supply current for connected device		1.0A or lower/common			
Wiring method for common		8 points/common (input: 3-wire terminal block type, output: 2-wire terminal block type)			
Number of occupied stations		32-point assignment/station (8 points used)			
Module power supply	Voltage	24VDC (ripple ratio: within 5%) (allowable voltage range: 20.4 to 26.4VDC)			
	Current	45mA or lower (at 24VDC and all points ON)			
Noise immunity		Noise voltage 500Vp-p, noise width 1μs, noise frequency 25 to 60Hz (DC type noise simulator condition)			
Withstand voltage		500VAC for 1 minute between all DC external terminals and ground			
Insulation resistance		10MΩ or higher between all DC external terminals and ground (500VDC insulation resistance tester)			
Protection degree		IP2X			
Weight		0.18kg			
External connection system	Communication part, module power supply part	7-point two-piece terminal block [Transmission circuit, module power supply, FG] M3×5.2 screw (tightening torque range: 0.59 to 0.88N•m) Applicable solderless terminal: 2 or less			
	I/O power supply part, I/O part	18-point direct-mount terminal block [I/O power supply, I/O signal] M3×5.2 screw (tightening torque range: 0.59 to 0.88N•m) Applicable solderless terminal: 2 or less			
Module mounting screw		M4 screw with plain washer finished round (tightening torque range: 0.78 to 1.08N•m) Mountable with a DIN rail in 6 orientations			
Applicable DIN rail		TH35-7.5Fe, TH35-7.5Al (compliant with IEC 60715 and JIS C 2812)			
Applicable solderless terminal		• RAV1.25-3 (compliant with JIS C 2805) [Applicable wire size: 0.3 to 1.25mm^2 (22 to 16 AWG) stranded wire] • V2-MS3, RAP2-3SL, TGV2-3N [Applicable wire size: 1.25 to 2.0mm^2 (16 to 14 AWG) stranded wire]			
Wire	Material	Copper			
	Temperature rating	75°C or more			
Accessory		User's manual			

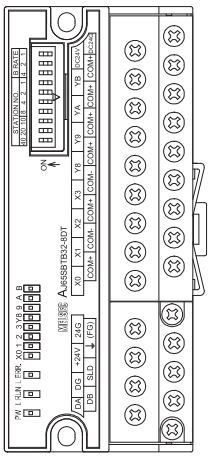

* For applicable solderless terminals connected to the terminal block, refer to the table above. Use applicable wires for the solderless terminals and fix them with an appropriate tightening torque. Use UL listed solderless terminals and, for crimping, use a tool recommended by their manufacturer.

6 - 1

External connection

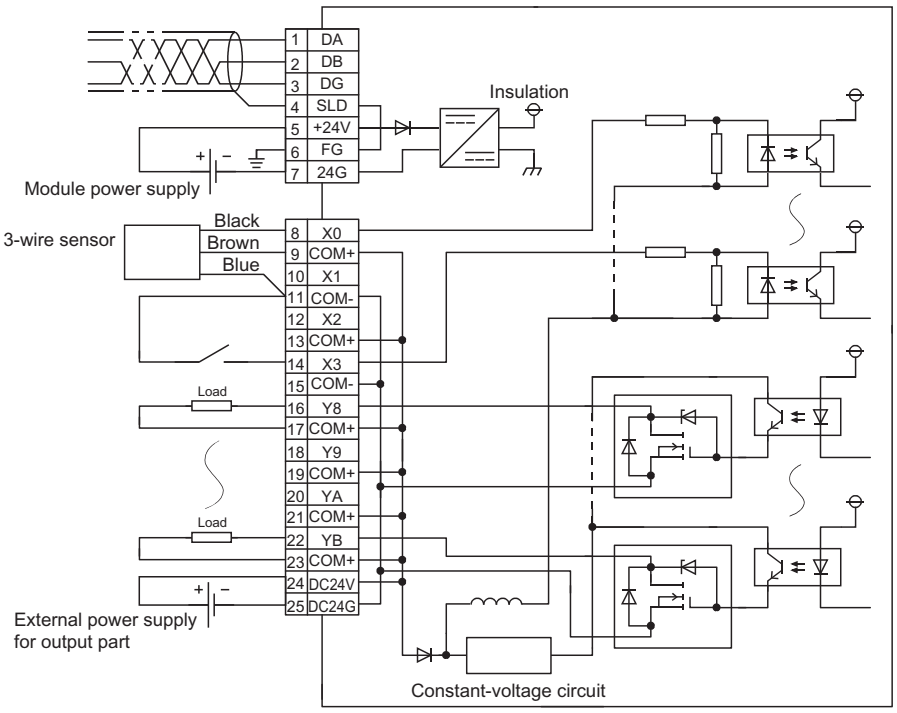

Terminal number	Signal name
TB1	DA
TB2	DB
TB3	DG
TB4	SLD
TB5	+24V
TB6	⏚ (FG)
TB7	24G
TB8	X0
TB9	COM+
TB10	X1
TB11	COM-
TB12	X2
TB13	COM+
TB14	X3
TB15	COM-
TB16	Y8
TB17	COM+
TB18	Y9
TB19	COM+
TB20	YA
TB21	COM+
TB22	YB
TB23	COM+
TB24	DC24V
TB25	DC24G

6 - 2

AbN
automation

6.1.2 AJ65SBTB32-8DT2 combined module

Item \ Type			DC input transistor output combined module			
			AJ65SBTB32-8DT2			Appearance
Input				Output		
Number of input points			4 points	Number of output points		4 points
Isolation method			Photocoupler	Isolation method		Photocoupler
Rated input voltage			24VDC (ripple ratio: within 5%)	Rated load voltage		24VDC (ripple ratio: within 5%)
Rated input current			Approx. 7mA	Operating load voltage range		19.2 to 26.4VDC
Operating voltage range			19.2 to 26.4VDC	Max. load current		0.5A/point, 1.2A/common
Max. number of simultaneous input points			100%	Max. inrush current		1.0A, 10ms or less
ON voltage/ON current			14VDC or higher/3.5mA or higher	Leakage current at OFF		0.1mA or lower
OFF voltage/OFF current			6VDC or lower/1.7mA or lower	Max. voltage drop at ON		0.3VDC or lower (TYP.) 0.5A, 0.6VDC or lower (MAX.) 0.5A
Input resistance			Approx. 3.3kΩ	Output type		Sink type
				Protection function		None
Response time	OFF→ON		1.5ms or less (at 24VDC)	Response time	OFF→ON	0.5ms or less
	ON→OFF		1.5ms or less (at 24VDC)		ON→OFF	1.5ms or less (resistive load)
				External power supply for output part	Voltage	24VDC (ripple ratio: within 5%) (allowable voltage range: 19.2 to 26.4VDC)
					Current	14.6mA or lower (at 24VDC and all points ON), excluding external load current
Input type			Positive common (sink type)	Surge suppressor		Zener diode
Supply current for connected device			1.0A or lower/common			
Wiring method for common			8 points/common (input: 3-wire terminal block type, output: 2-wire terminal block type)			
Number of occupied stations			32-point assignment/station (8 points used)			
Module power supply	Voltage		24VDC (ripple ratio: within 5%) (allowable voltage range: 20.4 to 26.4VDC)			
	Current		45mA or lower (at 24VDC and all points ON)			
Noise immunity			Noise voltage 500Vp-p, noise width 1μs, noise frequency 25 to 60Hz (DC type noise simulator condition)			
Withstand voltage			500VAC for 1 minute between all DC external terminals and ground			
Insulation resistance			10MΩ or higher between all DC external terminals and ground (500VDC insulation resistance tester)			
Protection degree			IP2X			
Weight			0.18kg			
External connection system	Communication part, module power supply part		7-point two-piece terminal block [Transmission circuit, module power supply, FG] M3×5.2 screw (tightening torque range: 0.59 to 0.88N•m) Applicable solderless terminal: 2 or less			
	I/O power supply part, I/O part		18-point direct-mount terminal block [I/O power supply, I/O signal] M3×5.2 screw (tightening torque range: 0.59 to 0.88N•m) Applicable solderless terminal: 2 or less			
Module mounting screw			M4 screw with plain washer finished round (tightening torque range: 0.78 to 1.08N•m) Mountable with a DIN rail in 6 orientations			
Applicable DIN rail			TH35-7.5Fe, TH35-7.5Al (compliant with IEC 60715 and JIS C 2812)			
Applicable solderless terminal			• RAV1.25-3 (compliant with JIS C 2805) [Applicable wire size: 0.3 to 1.25mm^2 (22 to 16 AWG) stranded wire] • V2-MS3, RAP2-3SL, TGV2-3N [Applicable wire size: 1.25 to 2.0mm^2 (16 to 14 AWG) stranded wire]			
Wire	Material		Copper			
	Temperature rating		75°C or more			
Accessory			User's manual			

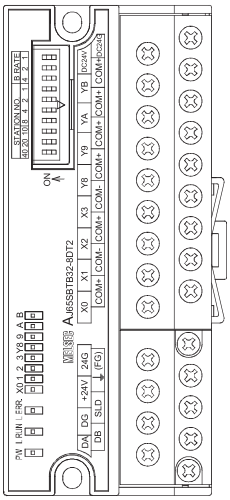

* For applicable solderless terminals connected to the terminal block, refer to the table above. Use applicable wires for the solderless terminals and fix them with an appropriate tightening torque. Use UL listed solderless terminals and, for crimping, use a tool recommended by their manufacturer.

6 - 3

External connection

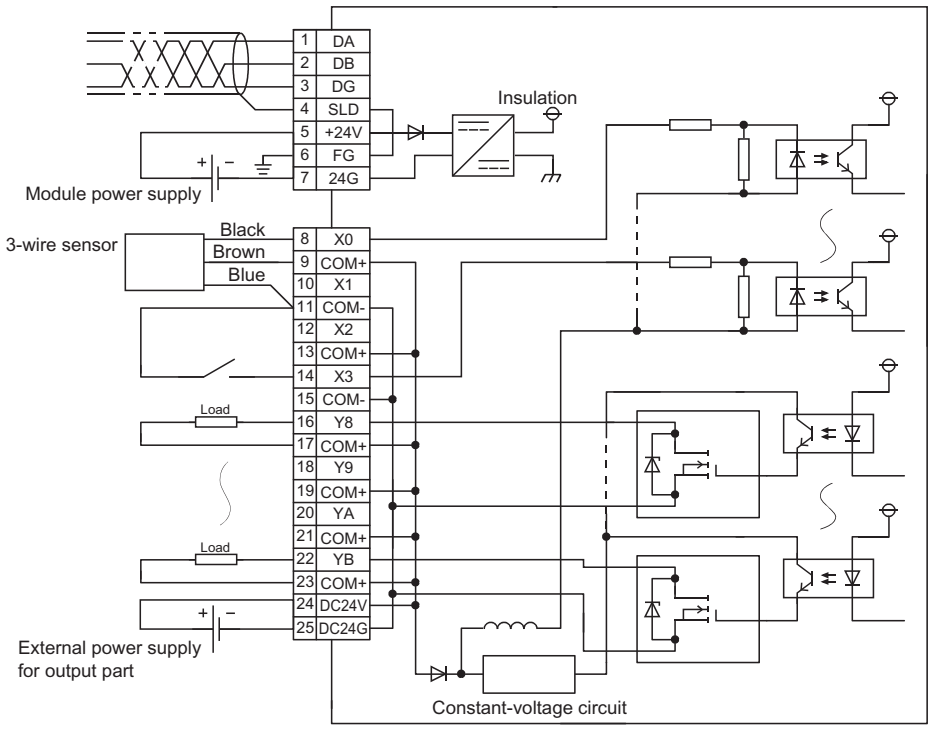

Terminal number	Signal name
TB1	DA
TB2	DB
TB3	DG
TB4	SLD
TB5	+24V
TB6	⏚ (FG)
TB7	24G
TB8	X0
TB9	COM+
TB10	X1
TB11	COM-
TB12	X2
TB13	COM+
TB14	X3
TB15	COM-
TB16	Y8
TB17	COM+
TB18	Y9
TB19	COM+
TB20	YA
TB21	COM+
TB22	YB
TB23	COM+
TB24	DC24V
TB25	DC24G

AbN
automation

6.1.3 AJ65SBTB1-16DT combined module

Item \ Type		DC input transistor output combined module				Appearance
		AJ65SBTB1-16DT				
Input			Output			
Number of input points		8 points	Number of output points		8 points	
Isolation method		Photocoupler	Isolation method		Photocoupler	
Rated input voltage		24VDC (ripple ratio: within 5%)	Rated load voltage		24VDC (ripple ratio: within 5%)	
Rated input current		Approx. 7mA	Operating load voltage range		19.2 to 26.4VDC	
Operating voltage range		19.2 to 26.4VDC	Max. load current		0.5A/point, 2.4A/common	
Max. number of simultaneous input points		100%	Max. inrush current		1.0A, 10ms or less	
ON voltage/ON current		14VDC or higher/3.5mA or higher	Leakage current at OFF		0.25mA or lower	
OFF voltage/OFF current		6VDC or lower/1.7mA or lower	Max. voltage drop at ON		0.3VDC or lower (TYP.) 0.5A, 0.6VDC or lower (MAX.) 0.5A	
Input resistance		Approx. 3.3kΩ	Output type		Sink type	
			Protection function		Overload protection, overvoltage protection, overheat protection	
Response time	OFF→ON	1.5ms or less (at 24VDC)	Response time	OFF→ON	0.5ms or less	
	ON→OFF	1.5ms or less (at 24VDC)		ON→OFF	1.5ms or less (resistive load)	
			External power supply for output part	Voltage	24VDC (ripple ratio: within 5%) (allowable voltage range: 19.2 to 26.4VDC)	
				Current	17.8mA or lower (at 24VDC and all points ON), excluding external load current	
Input type		Positive common (sink type)	Surge suppressor		Zener diode	
Wiring method for common		16 points/common (1-wire, terminal block type)				
Number of occupied stations		32-point assignment/station (16 points used)				
Module power supply	Voltage	24VDC (ripple ratio: within 5%) (allowable voltage range: 20.4 to 26.4VDC)				
	Current	50mA or lower (at 24VDC and all points ON)				
Noise immunity		Noise voltage 500Vp-p, noise width 1μs, noise frequency 25 to 60Hz (DC type noise simulator condition)				
Withstand voltage		500VAC for 1 minute between all DC external terminals and ground				
Insulation resistance		10MΩ or higher between all DC external terminals and ground (500VDC insulation resistance tester)				
Protection degree		IP2X				
Weight		0.18kg				
External connection system	Communication part, module power supply part	7-point two-piece terminal block [Transmission circuit, module power supply, FG] M3×5.2 screw (tightening torque range: 0.59 to 0.88N•m) Applicable solderless terminal: 2 or less				
	I/O power supply part, I/O part	18-point direct-mount terminal block [I/O power supply, I/O signal] M3×5.2 screw (tightening torque range: 0.59 to 0.88N•m) Applicable solderless terminal: 2 or less				
Module mounting screw		M4 screw with plain washer finished round (tightening torque range: 0.78 to 1.08N•m) Mountable with a DIN rail in 6 orientations				
Applicable DIN rail		TH35-7.5Fe, TH35-7.5Al (compliant with IEC 60715 and JIS C 2812)				
Applicable solderless terminal		• RAV1.25-3 (compliant with JIS C 2805) [Applicable wire size: 0.3 to 1.25mm^2 (22 to 16 AWG) stranded wire] • V2-MS3, RAP2-3SL, TGV2-3N [Applicable wire size: 1.25 to 2.0mm^2 (16 to 14 AWG) stranded wire]				
Wire	Material	Copper				
	Temperature rating	75°C or more				
Accessory		User's manual				

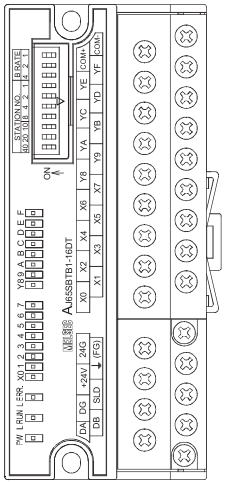

* For applicable solderless terminals connected to the terminal block, refer to the table above. Use applicable wires for the solderless terminals and fix them with an appropriate tightening torque. Use UL listed solderless terminals and, for crimping, use a tool recommended by their manufacturer.

6 - 5

External connection

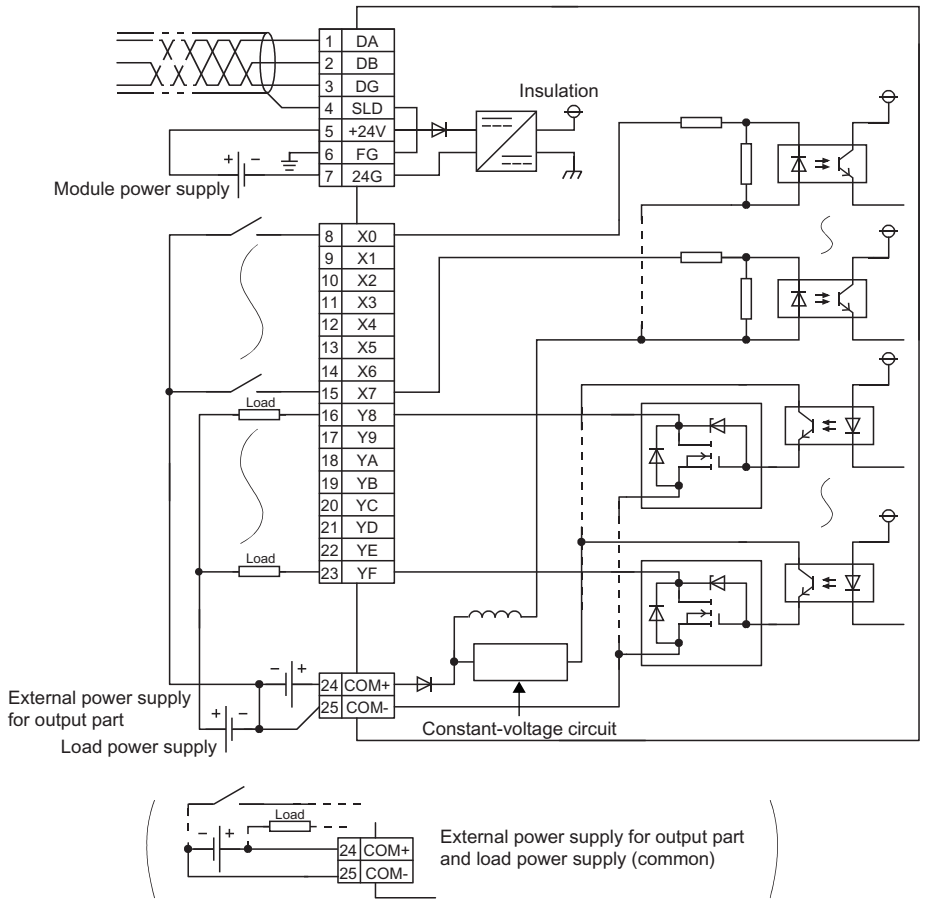

Terminal number	Signal name
TB1	DA
TB2	DB
TB3	DG
TB4	SLD
TB5	+24V
TB6	⏚ (FG)
TB7	24G
TB8	X0
TB9	X1
TB10	X2
TB11	X3
TB12	X4
TB13	X5
TB14	X6
TB15	X7
TB16	Y8
TB17	Y9
TB18	YA
TB19	YB
TB20	YC
TB21	YD
TB22	YE
TB23	YF
TB24	COM+
TB25	COM-

AbN
automation

6.1.4 AJ65SBTB1-16DT1 combined module

Item \ Type			DC input transistor output combined module			Appearance
			AJ65SBTB1-16DT1			
Input			Output			
Number of input points		8 points	Number of output points		8 points	
Isolation method		Photocoupler	Isolation method		Photocoupler	
Rated input voltage		24VDC (ripple ratio: within 5%)	Rated load voltage		24VDC (ripple ratio: within 5%)	
Rated input current		Approx. 5mA	Operating load voltage range		19.2 to 26.4VDC	
Operating voltage range		19.2 to 26.4VDC	Max. load current		0.5A/point, 2.4A/common	
Max. number of simultaneous input points		100%	Max. inrush current		1.0A, 10ms or less	
ON voltage/ON current		15VDC or higher/3mA or higher	Leakage current at OFF		0.25mA or lower	
OFF voltage/OFF current		3VDC or lower/0.5mA or lower	Max. voltage drop at ON		0.3VDC or lower (TYP.) 0.5A, 0.6VDC or lower (MAX.) 0.5A	
Input resistance		Approx. 4.7kΩ	Output type		Sink type	
			Protection function		Overload protection, overvoltage protection, overheat protection	
Response time	OFF→ON	0.2ms or less (at 24VDC)	Response time	OFF→ON	0.5ms or less	
	ON→OFF	0.2ms or less (at 24VDC)		ON→OFF	1.5ms or less (resistive load)	
			External power supply for output part	Voltage	24VDC (ripple ratio: within 5%) (allowable voltage range: 19.2 to 26.4VDC)	
				Current	17.8mA or lower (at 24VDC and all points ON), excluding external load current	
Input type		Positive common (sink type)	Surge suppressor		Zener diode	
Wiring method for common		16 points/common (1-wire, terminal block type)				
Number of occupied stations		32-point assignment/station (16 points used)				
Module power supply	Voltage	24VDC (ripple ratio: within 5%) (allowable voltage range: 20.4 to 26.4VDC)				
	Current	55mA or lower (at 24VDC and all points ON)				
Noise immunity		Noise voltage 500Vp-p, noise width 1μs, noise frequency 25 to 60Hz (DC type noise simulator condition)				
Withstand voltage		500VAC for 1 minute between all DC external terminals and ground				
Insulation resistance		10MΩ or higher between all DC external terminals and ground (500VDC insulation resistance tester)				
Protection degree		IP2X				
Weight		0.18kg				
External connection system	Communication part, module power supply part	7-point two-piece terminal block [Transmission circuit, module power supply, FG] M3×5.2 screw (tightening torque range: 0.59 to 0.88N•m) Applicable solderless terminal: 2 or less				
	I/O power supply part, I/O part	18-point direct-mount terminal block [I/O power supply, I/O signal] M3×5.2 screw (tightening torque range: 0.59 to 0.88N•m) Applicable solderless terminal: 2 or less				
Module mounting screw		M4 screw with plain washer finished round (tightening torque range: 0.78 to 1.08N•m) Mountable with a DIN rail in 6 orientations				
Applicable DIN rail		TH35-7.5Fe, TH35-7.5Al (compliant with IEC 60715 and JIS C 2812)				
Applicable solderless terminal		• RAV1.25-3 (compliant with JIS C 2805) [Applicable wire size: 0.3 to 1.25mm^2 (22 to 16 AWG) stranded wire] • V2-MS3, RAP2-3SL, TGV2-3N [Applicable wire size: 1.25 to 2.0mm^2 (16 to 14 AWG) stranded wire]				
Wire	Material	Copper				
	Temperature rating	75°C or more				
Accessory		User's manual				

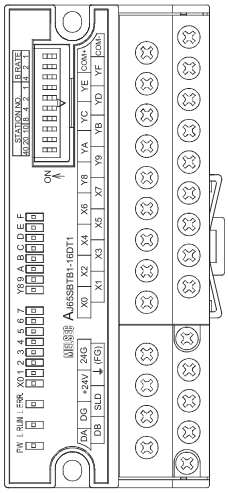

* For applicable solderless terminals connected to the terminal block, refer to the table above. Use applicable wires for the solderless terminals and fix them with an appropriate tightening torque. Use UL listed solderless terminals and, for crimping, use a tool recommended by their manufacturer.

6 - 7

External connection

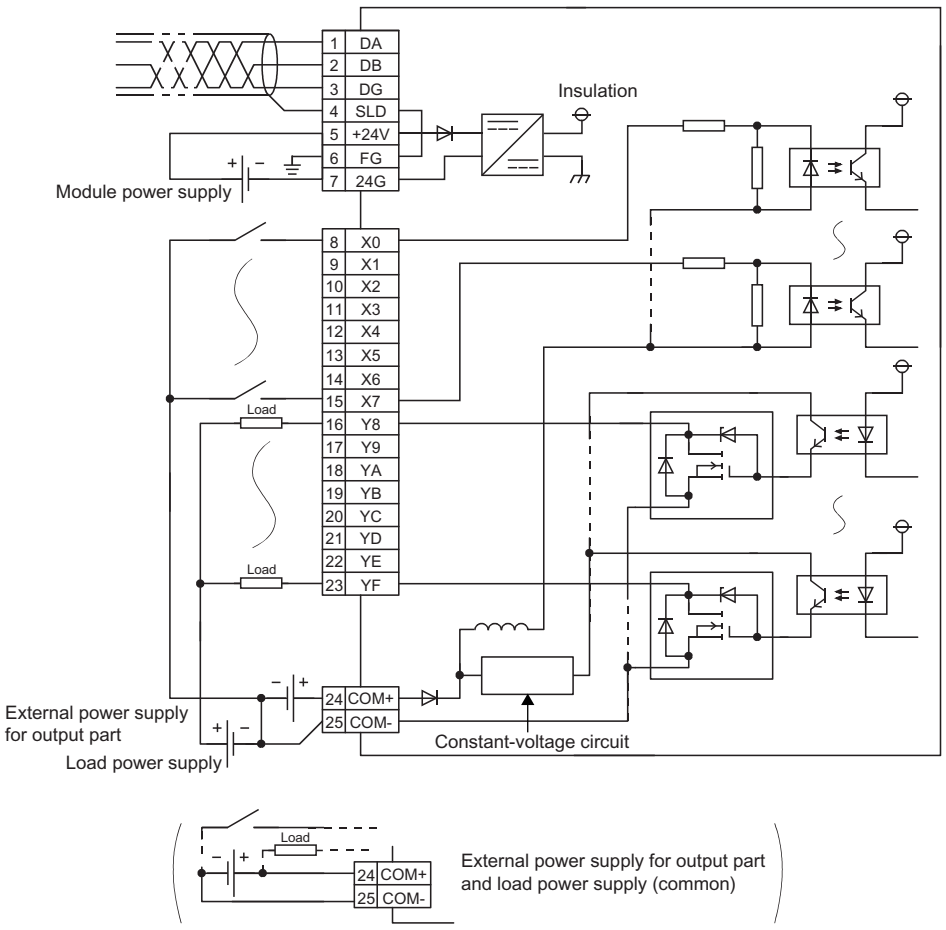

Terminal number	Signal name
TB1	DA
TB2	DB
TB3	DG
TB4	SLD
TB5	+24V
TB6	⏚ (FG)
TB7	24G
TB8	X0
TB9	X1
TB10	X2
TB11	X3
TB12	X4
TB13	X5
TB14	X6
TB15	X7
TB16	Y8
TB17	Y9
TB18	YA
TB19	YB
TB20	YC
TB21	YD
TB22	YE
TB23	YF
TB24	COM+
TB25	COM-

AbN
automation

6.1.5 AJ65SBTB1-16DT2 combined module

Item \ Type		DC input transistor output combined module			
		AJ65SBTB1-16DT2			Appearance
Input			Output		
Number of input points		8 points	Number of output points		8 points
Isolation method		Photocoupler	Isolation method		Photocoupler
Rated input voltage		24VDC (ripple ratio: within 5%)	Rated load voltage		24VDC (ripple ratio: within 5%)
Rated input current		Approx. 7mA	Operating load voltage range		19.2 to 26.4VDC
Operating voltage range		19.2 to 26.4VDC	Max. load current		0.5A/point, 2.4A/common
Max. number of simultaneous input points		100%	Max. inrush current		1.0A, 10ms or less
ON voltage/ON current		14VDC or higher/3.5mA or higher	Leakage current at OFF		0.1mA or lower
OFF voltage/OFF current		6VDC or lower/1.7mA or lower	Max. voltage drop at ON		0.3VDC or lower (TYP.) 0.5A, 0.6VDC or lower (MAX.) 0.5A
Input resistance		Approx. 3.3kΩ	Output type		Sink type
			Protection function		None
Response time	OFF→ON	1.5ms or less (at 24VDC)	Response time	OFF→ON	0.5ms or less
	ON→OFF	1.5ms or less (at 24VDC)		ON→OFF	1.5ms or less (resistive load)
			External power supply for output part	Voltage	24VDC (ripple ratio: within 5%) (allowable voltage range: 19.2 to 26.4VDC)
				Current	17.8mA or lower (at 24VDC and all points ON), excluding external load current
Input type		Positive common (sink type)	Surge suppressor		Zener diode
Wiring method for common		16 points/common (1-wire, terminal block type)			
Number of occupied stations		32-point assignment/station (16 points used)			
Module power supply	Voltage	24VDC (ripple ratio: within 5%) (allowable voltage range: 20.4 to 26.4VDC)			
	Current	50mA or lower (at 24VDC and all points ON)			
Noise immunity		Noise voltage 500Vp-p, noise width 1μs, noise frequency 25 to 60Hz (DC type noise simulator condition)			
Withstand voltage		500VAC for 1 minute between all DC external terminals and ground			
Insulation resistance		10MΩ or higher between all DC external terminals and ground (500VDC insulation resistance tester)			
Protection degree		IP2X			
Weight		0.18kg			
External connection system	Communication part, module power supply part	7-point two-piece terminal block [Transmission circuit, module power supply, FG] M3×5.2 screw (tightening torque range: 0.59 to 0.88N•m) Applicable solderless terminal: 2 or less			
	I/O power supply part, I/O part	18-point direct-mount terminal block [I/O power supply, I/O signal] M3×5.2 screw (tightening torque range: 0.59 to 0.88N•m) Applicable solderless terminal: 2 or less			
Module mounting screw		M4 screw with plain washer finished round (tightening torque range: 0.78 to 1.08N•m) Mountable with a DIN rail in 6 orientations			
Applicable DIN rail		TH35-7.5Fe, TH35-7.5Al (compliant with IEC 60715 and JIS C 2812)			
Applicable solderless terminal		• RAV1.25-3 (compliant with JIS C 2805) [Applicable wire size: 0.3 to 1.25mm^2 (22 to 16 AWG) stranded wire] • V2-MS3, RAP2-3SL, TGV2-3N [Applicable wire size: 1.25 to 2.0mm^2 (16 to 14 AWG) stranded wire]			
Wire	Material	Copper			
	Temperature rating	75°C or more			
Accessory		User's manual			

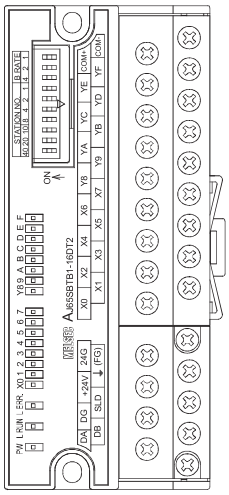

* For applicable solderless terminals connected to the terminal block, refer to the table above. Use applicable wires for the solderless terminals and fix them with an appropriate tightening torque. Use UL listed solderless terminals and, for crimping, use a tool recommended by their manufacturer.

6 - 9

External connection

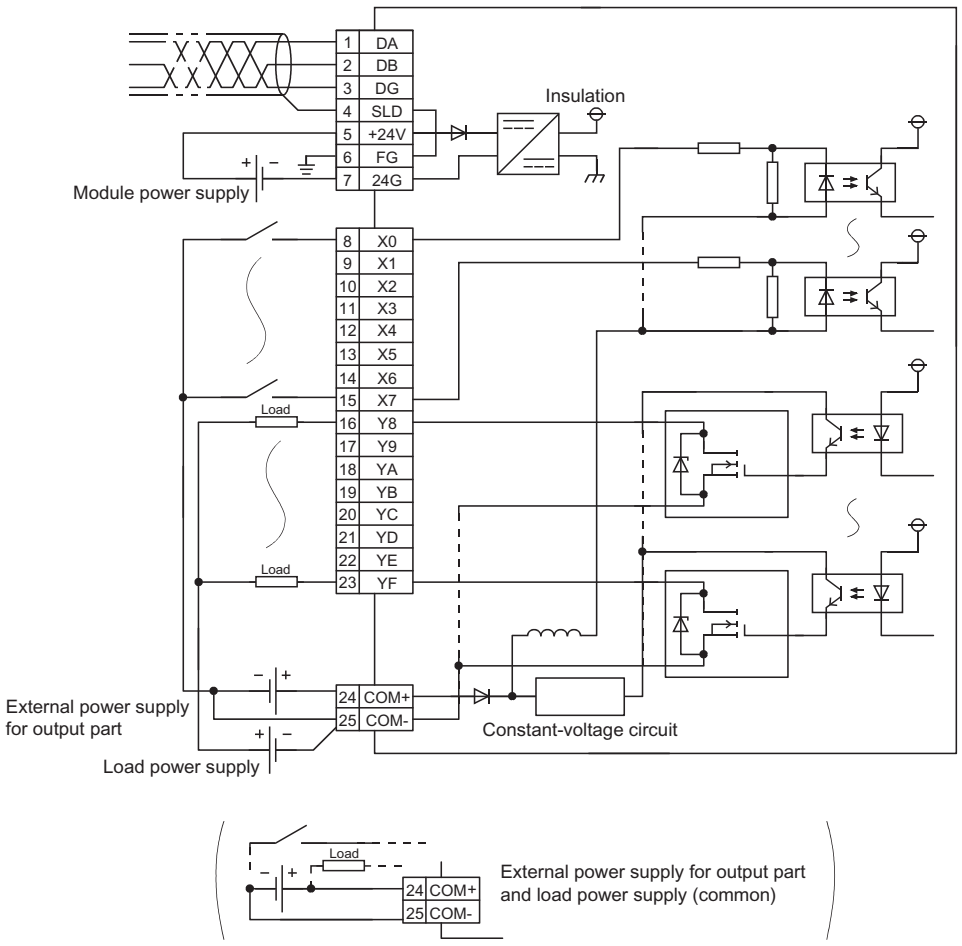

Terminal number	Signal name
TB1	DA
TB2	DB
TB3	DG
TB4	SLD
TB5	+24V
TB6	⏚ (FG)
TB7	24G
TB8	X0
TB9	X1
TB10	X2
TB11	X3
TB12	X4
TB13	X5
TB14	X6
TB15	X7
TB16	Y8
TB17	Y9
TB18	YA
TB19	YB
TB20	YC
TB21	YD
TB22	YE
TB23	YF
TB24	COM+
TB25	COM-

6.1.6 AJ65SBTB1-16DT3 combined module

Item \ Type			DC input transistor output combined module			
			AJ65SBTB1-16DT3			Appearance
Input				Output		
Number of input points			8 points	Number of output points		8 points
Isolation method			Photocoupler	Isolation method		Photocoupler
Rated input voltage			24VDC (ripple ratio: within 5%)	Rated load voltage		24VDC (ripple ratio: within 5%)
Rated input current			Approx. 5mA	Operating load voltage range		19.2 to 26.4VDC
Operating voltage range			19.2 to 26.4VDC	Max. load current		0.5A/point, 2.4A/common
Max. number of simultaneous input points			100%	Max. inrush current		1.0A, 10ms or less
ON voltage/ON current			15VDC or higher/3mA or higher	Leakage current at OFF		0.1mA or lower
OFF voltage/OFF current			3VDC or lower/0.5mA or lower	Max. voltage drop at ON		0.3VDC or lower (TYP.) 0.5A, 0.6VDC or lower (MAX.) 0.5A
Input resistance			Approx. 4.7kΩ	Output type		Sink type
				Protection function		None
Response time	OFF→ON		0.2ms or less (at 24VDC)	Response time	OFF→ON	0.5ms or less
	ON→OFF		0.2ms or less (at 24VDC)		ON→OFF	1.5ms or less (resistive load)
				External power supply for output part	Voltage	24VDC (ripple ratio: within 5%) (allowable voltage range: 19.2 to 26.4VDC)
					Current	17.8mA or lower (at 24VDC and all points ON), excluding external load current
Input type			Positive common (sink type)	Surge suppressor		Zener diode
Wiring method for common			16 points/common (1-wire, terminal block type)			
Number of occupied stations			32-point assignment/station (16 points used)			
Module power supply	Voltage		24VDC (ripple ratio: within 5%) (allowable voltage range: 20.4 to 26.4VDC)			
	Current		55mA or lower (at 24VDC and all points ON)			
Noise immunity			Noise voltage 500Vp-p, noise width 1μs, noise frequency 25 to 60Hz (DC type noise simulator condition)			
Withstand voltage			500VAC for 1 minute between all DC external terminals and ground			
Insulation resistance			10MΩ or higher between all DC external terminals and ground (500VDC insulation resistance tester)			
Protection degree			IP2X			
Weight			0.18kg			
External connection system	Communication part, module power supply part		7-point two-piece terminal block [Transmission circuit, module power supply, FG] M3×5.2 screw (tightening torque range: 0.59 to 0.88N•m) Applicable solderless terminal: 2 or less			
	I/O power supply part, I/O part		18-point direct-mount terminal block [I/O power supply, I/O signal] M3×5.2 screw (tightening torque range: 0.59 to 0.88N•m) Applicable solderless terminal: 2 or less			
Module mounting screw			M4 screw with plain washer finished round (tightening torque range: 0.78 to 1.08N•m) Mountable with a DIN rail in 6 orientations			
Applicable DIN rail			TH35-7.5Fe, TH35-7.5Al (compliant with IEC 60715 and JIS C 2812)			
Applicable solderless terminal			• RAV1.25-3 (compliant with JIS C 2805) [Applicable wire size: 0.3 to 1.25mm^2 (22 to 16 AWG) stranded wire] • V2-MS3, RAP2-3SL, TGV2-3N [Applicable wire size: 1.25 to 2.0mm^2 (16 to 14 AWG) stranded wire]			
Wire	Material		Copper			
	Temperature rating		75°C or more			
Accessory			User's manual			

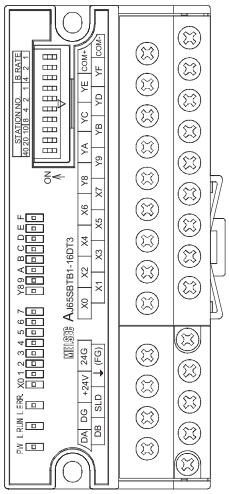

* For applicable solderless terminals connected to the terminal block, refer to the table above. Use applicable wires for the solderless terminals and fix them with an appropriate tightening torque. Use UL listed solderless terminals and, for crimping, use a tool recommended by their manufacturer.

External connection

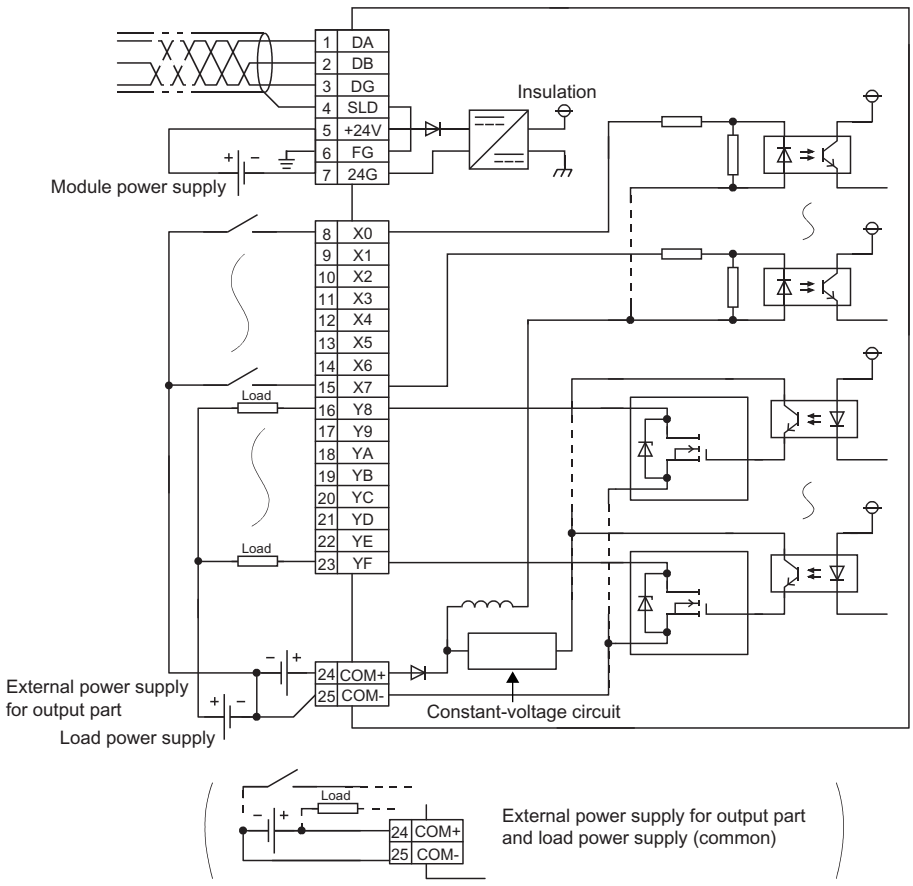

Terminal number	Signal name
TB1	DA
TB2	DB
TB3	DG
TB4	SLD
TB5	+24V
TB6	⏚ (FG)
TB7	24G
TB8	X0
TB9	X1
TB10	X2
TB11	X3
TB12	X4
TB13	X5
TB14	X6
TB15	X7
TB16	Y8
TB17	Y9
TB18	YA
TB19	YB
TB20	YC
TB21	YD
TB22	YE
TB23	YF
TB24	COM+
TB25	COM-

6 - 12

AbN
automation

6.1.7 AJ65SBTB32-16DT combined module

Item \ Type		DC input transistor output combined module				Appearance
		AJ65SBTB32-16DT				
Input			Output			
Number of input points		8 points	Number of output points		8 points	
Isolation method		Photocoupler	Isolation method		Photocoupler	
Rated input voltage		24VDC (ripple ratio: within 5%)	Rated load voltage		24VDC (ripple ratio: within 5%)	
Rated input current		Approx. 7mA	Operating load voltage range		19.2 to 26.4VDC	
Operating voltage range		19.2 to 26.4VDC	Max. load current		0.5A/point, 2.4A/common	
Max. number of simultaneous input points		100%	Max. inrush current		1.0A, 10ms or less	
ON voltage/ON current		14VDC or higher/3.5mA or higher	Leakage current at OFF		0.25mA or lower	
OFF voltage/OFF current		6VDC or lower/1.7mA or lower	Max. voltage drop at ON		0.3VDC or lower (TYP.) 0.5A, 0.6VDC or lower (MAX.) 0.5A	
Input resistance		Approx. 3.3kΩ	Output type		Sink type	
			Protection function		Overload protection, overvoltage protection, overheat protection	
Response time	OFF→ON	1.5ms or less (at 24VDC)	Response time	OFF→ON	0.5ms or less	
	ON→OFF	1.5ms or less (at 24VDC)		ON→OFF	1.5ms or less (resistive load)	
			External power supply for output part	Voltage	24VDC (ripple ratio: within 5%) (allowable voltage range: 19.2 to 26.4VDC)	
				Current	17.8mA or lower (at 24VDC and all points ON), excluding external load current	
Input type		Positive common (sink type)	Surge suppressor		Zener diode	
Supply current for connected device		1.0A or lower/common				
Wiring method for common		16 points/common (input: 3-wire terminal block type, output: 2-wire terminal block type)				
Number of occupied stations		32-point assignment/station (16 points used)				
Module power supply	Voltage	24VDC (ripple ratio: within 5%) (allowable voltage range: 20.4 to 26.4VDC)				
	Current	50mA or lower (at 24VDC and all points ON)				
Noise immunity		Noise voltage 500Vp-p, noise width 1μs, noise frequency 25 to 60Hz (DC type noise simulator condition)				
Withstand voltage		500VAC for 1 minute between all DC external terminals and ground				
Insulation resistance		10MΩ or higher between all DC external terminals and ground (500VDC insulation resistance tester)				
Protection degree		IP2X				
Weight		0.25kg				
External connection system	Communication part, module power supply part	7-point two-piece terminal block [Transmission circuit, module power supply, FG] M3×5.2 screw (tightening torque range: 0.59 to 0.88N•m) Applicable solderless terminal: 2 or less				
	I/O power supply part, I/O part	34-point direct-mount terminal block [I/O power supply, I/O signal] M3×5.2 screw (tightening torque range: 0.59 to 0.88N•m) Applicable solderless terminal: 2 or less				
Module mounting screw		M4 screw with plain washer finished round (tightening torque range: 0.78 to 1.08N•m) Mountable with a DIN rail in 6 orientations				
Applicable DIN rail		TH35-7.5Fe, TH35-7.5Al (compliant with IEC 60715 and JIS C 2812)				
Applicable solderless terminal		• RAV1.25-3 (compliant with JIS C 2805) [Applicable wire size: 0.3 to 1.25mm^2 (22 to 16 AWG) stranded wire] • V2-MS3, RAP2-3SL, TGV2-3N [Applicable wire size: 1.25 to 2.0mm^2 (16 to 14 AWG) stranded wire]				
Wire	Material	Copper				
	Temperature rating	75°C or more				
Accessory		User's manual				

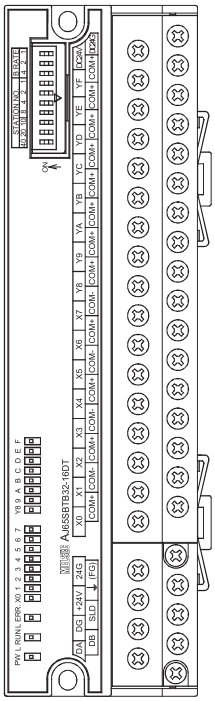

* For applicable solderless terminals connected to the terminal block, refer to the table above. Use applicable wires for the solderless terminals and fix them with an appropriate tightening torque. Use UL listed solderless terminals and, for crimping, use a tool recommended by their manufacturer.

6 - 13

External connection

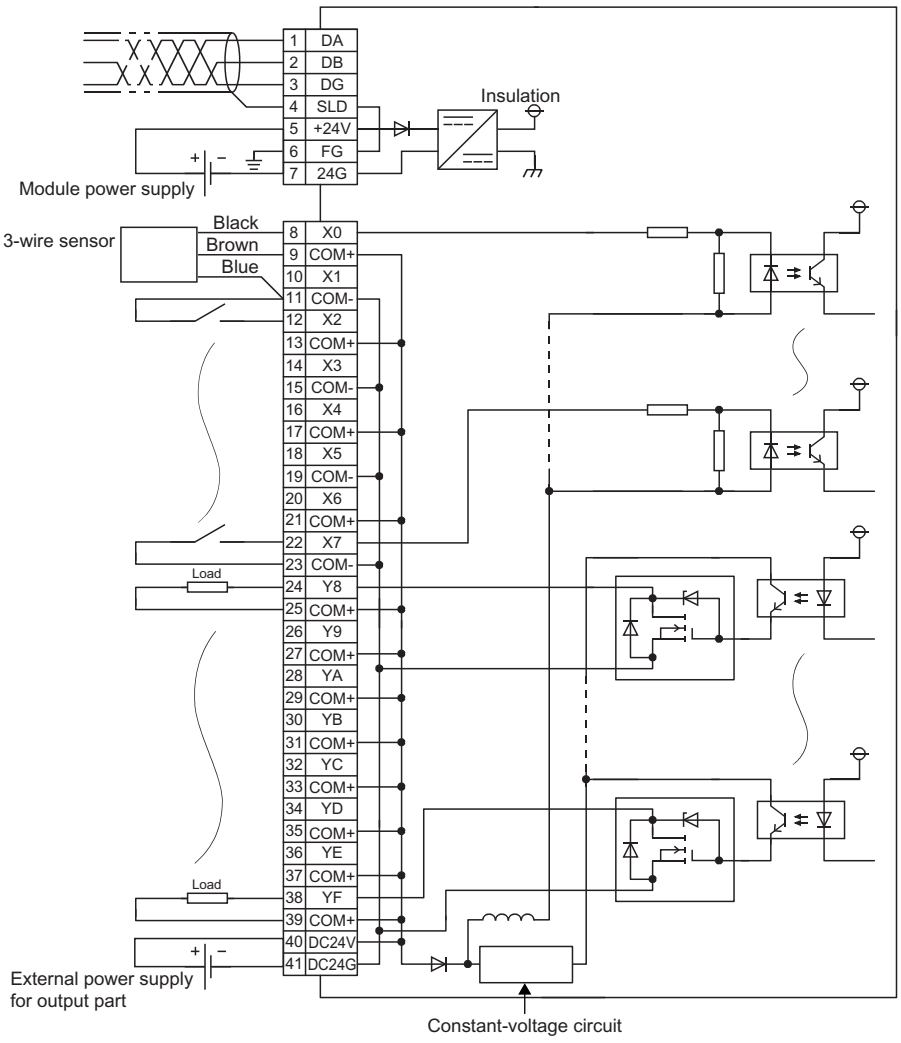

Terminal number	Signal name
TB1	DA
TB2	DB
TB3	DG
TB4	SLD
TB5	+24V
TB6	⏚ (FG)
TB7	24G
TB8	X0
TB9	COM+
TB10	X1
TB11	COM-
TB12	X2
TB13	COM+
TB14	X3
TB15	COM-
TB16	X4
TB17	COM+
TB18	X5
TB19	COM-
TB20	X6
TB21	COM+
TB22	X7
TB23	COM-
TB24	Y8
TB25	COM+
TB26	Y9
TB27	COM+
TB28	YA
TB29	COM+
TB30	YB
TB31	COM+
TB32	YC
TB33	COM+
TB34	YD
TB35	COM+
TB36	YE
TB37	COM+
TB38	YF
TB39	COM+
TB40	DC24V
TB41	DC24G

6 - 14

AbN
automation

6.1.8 AJ65SBTB32-16DT2 combined module

Item \ Type		DC input transistor output combined module			
		AJ65SBTB32-16DT2			Appearance
Input			Output		
Number of input points		8 points	Number of output points		8 points
Isolation method		Photocoupler	Isolation method		Photocoupler
Rated input voltage		24VDC (ripple ratio: within 5%)	Rated load voltage		24VDC (ripple ratio: within 5%)
Rated input current		Approx. 7mA	Operating load voltage range		19.2 to 26.4VDC
Operating voltage range		19.2 to 26.4VDC	Max. load current		0.5A/point, 2.4A/common
Max. number of simultaneous input points		100%	Max. inrush current		1.0A, 10ms or less
ON voltage/ON current		14VDC or higher/3.5mA or higher	Leakage current at OFF		0.1mA or lower
OFF voltage/OFF current		6VDC or lower/1.7mA or lower	Max. voltage drop at ON		0.3VDC or lower (TYP.) 0.5A, 0.6VDC or lower (MAX.) 0.5A
Input resistance		Approx. 3.3kΩ	Output type		Sink type
			Protection function		None
Response time	OFF→ON	1.5ms or less (at 24VDC)	Response time	OFF→ON	0.5ms or less
	ON→OFF	1.5ms or less (at 24VDC)		ON→OFF	1.5ms or less (resistive load)
			External power supply for output part	Voltage	24VDC (ripple ratio: within 5%) (allowable voltage range: 19.2 to 26.4VDC)
				Current	17.8mA or lower (at 24VDC and all points ON), excluding external load current
Input type		Positive common (sink type)	Surge suppressor		Zener diode
Supply current for connected device		1.0A or lower/common			
Wiring method for common		16 points/common (input: 3-wire terminal block type, output: 2-wire terminal block type)			
Number of occupied stations		32-point assignment/station (16 points used)			
Module power supply	Voltage	24VDC (ripple ratio: within 5%) (allowable voltage range: 20.4 to 26.4VDC)			
	Current	50mA or lower (at 24VDC and all points ON)			
Noise immunity		Noise voltage 500Vp-p, noise width 1μs, noise frequency 25 to 60Hz (DC type noise simulator condition)			
Withstand voltage		500VAC for 1 minute between all DC external terminals and ground			
Insulation resistance		10MΩ or higher between all DC external terminals and ground (500VDC insulation resistance tester)			
Protection degree		IP2X			
Weight		0.25kg			
External connection system	Communication part, module power supply part	7-point two-piece terminal block [Transmission circuit, module power supply, FG] M3×5.2 screw (tightening torque range: 0.59 to 0.88N•m) Applicable solderless terminal: 2 or less			
	I/O power supply part, I/O part	34-point direct-mount terminal block [I/O power supply, I/O signal] M3×5.2 screw (tightening torque range: 0.59 to 0.88N•m) Applicable solderless terminal: 2 or less			
Module mounting screw		M4 screw with plain washer finished round (tightening torque range: 0.78 to 1.08N•m) Mountable with a DIN rail in 6 orientations			
Applicable DIN rail		TH35-7.5Fe, TH35-7.5Al (compliant with IEC 60715 and JIS C 2812)			
Applicable solderless terminal		• RAV1.25-3 (compliant with JIS C 2805) [Applicable wire size: 0.3 to 1.25mm^2 (22 to 16 AWG) stranded wire] • V2-MS3, RAP2-3SL, TGV2-3N [Applicable wire size: 1.25 to 2.0mm^2 (16 to 14 AWG) stranded wire]			
Wire	Material	Copper			
	Temperature rating	75°C or more			
Accessory		User's manual			

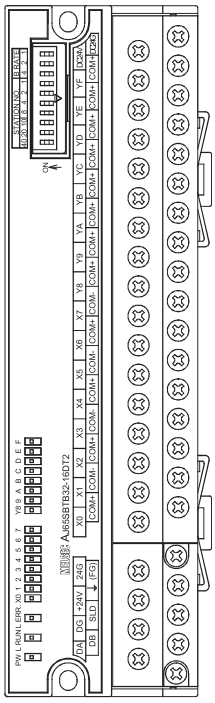

* For applicable solderless terminals connected to the terminal block, refer to the table above. Use applicable wires for the solderless terminals and fix them with an appropriate tightening torque. Use UL listed solderless terminals and, for crimping, use a tool recommended by their manufacturer.

6 - 15

External connection

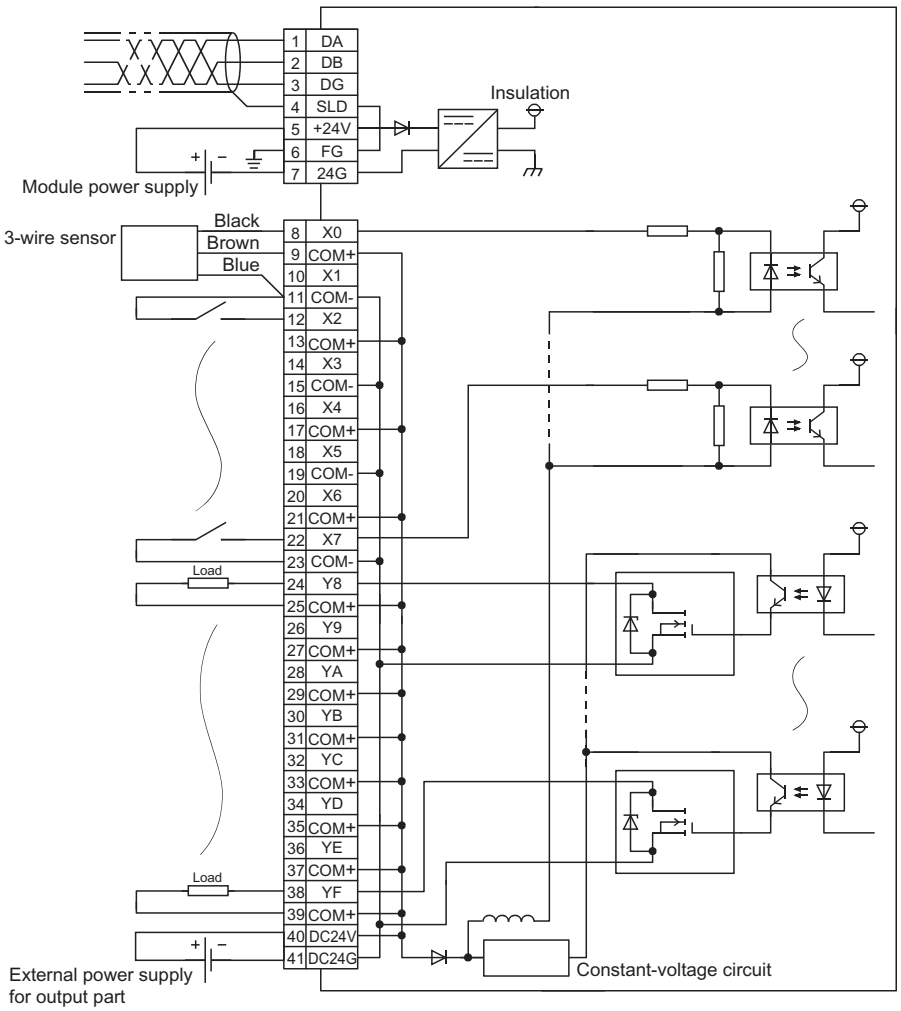

Terminal number	Signal name
TB1	DA
TB2	DB
TB3	DG
TB4	SLD
TB5	+24V
TB6	⏚ (FG)
TB7	24G
TB8	X0
TB9	COM+
TB10	X1
TB11	COM-
TB12	X2
TB13	COM+
TB14	X3
TB15	COM-
TB16	X4
TB17	COM+
TB18	X5
TB19	COM-
TB20	X6
TB21	COM+
TB22	X7
TB23	COM-
TB24	Y8
TB25	COM+
TB26	Y9
TB27	COM+
TB28	YA
TB29	COM+
TB30	YB
TB31	COM+
TB32	YC
TB33	COM+
TB34	YD
TB35	COM+
TB36	YE
TB37	COM+
TB38	YF
TB39	COM+
TB40	DC24V
TB41	DC24G

6 - 16

AbN
automation

6.1.9 AJ65SBTB32-16KDT2 combined module

Item \ Type			DC input transistor output combined module						
			AJ65SBTB32-16KDT2						Appearance
Input							Output		
Number of input points			8 points				Number of output points	8 points	
Isolation method			Photocoupler				Isolation method	Photocoupler	
Rated input voltage			24VDC (ripple ratio: within 5%)				Rated load voltage	24VDC (ripple ratio: within 5%)	
Rated input current			Approx. 7mA				Operating load voltage range	20.4 to 28.8VDC	
Operating voltage range			20.4 to 28.8VDC				Max. load current	0.5A/point, 2.4A/common	
Max. number of simultaneous input points			100%				Max. inrush current	1.0A, 10ms or less	
ON voltage/ON current			14VDC or higher/4mA or higher				Leakage current at OFF	0.1mA or lower	
OFF voltage/OFF current			5.5VDC or lower/1.7mA or lower				Max. voltage drop at ON	0.3VDC or lower (TYP.) 0.5A, 0.6VDC or lower (MAX.) 0.5A	
Input resistance			Approx. 3.0kΩ				Output type	Sink type	
							Protection function	None	
Response time	Input response speed		0.2ms	1.5ms	5ms	10ms	Response time	OFF→ON	0.5ms or less
	OFF→ON		0.2ms or less	1.5ms or less	5ms or less	10ms or less			
	ON→OFF		0.2ms or less	1.5ms or less	5ms or less	10ms or less		ON→OFF	1.5ms or less (resistive load)
							External power supply for output part	Voltage	24VDC (ripple ratio: within 5%) (allowable voltage range: 19.2 to 28.8VDC)
								Current	10mA or lower (at 24VDC and all points ON), excluding external load current
Input type			Positive common (sink type)				Surge suppressor	Zener diode	
Supply current for connected device			1.0A or lower/common						
Wiring method for common			16 points/common (input: 3-wire terminal block type, output: 2-wire terminal block type)						
Number of occupied stations			32-point assignment/station (16 points used)						
Module power supply	Voltage		24VDC (ripple ratio: within 5%) (allowable voltage range: 20.4 to 26.4VDC)						
	Current		55mA or lower (at 24VDC and all points ON)						
Noise immunity			Noise voltage 500Vp-p, noise width 1μs, noise frequency 25 to 60Hz (DC type noise simulator condition)						
Withstand voltage			500VAC for 1 minute between all DC external terminals and ground						
Insulation resistance			10MΩ or higher between all DC external terminals and ground (500VDC insulation resistance tester)						
Protection degree			IP2X						
Weight			0.26kg						
External connection system	Communication part, module power supply part		7-point two-piece terminal block [Transmission circuit, module power supply, FG] M3×5.2 screw (tightening torque range: 0.59 to 0.88N•m) Applicable solderless terminal: 2 or less						
	I/O power supply part, I/O part		34-point direct-mount terminal block [I/O power supply, I/O signal] M3×5.2 screw (tightening torque range: 0.59 to 0.88N•m) Applicable solderless terminal: 2 or less						
Module mounting screw			M4 screw with plain washer finished round (tightening torque range: 0.78 to 1.08N•m) Mountable with a DIN rail in 6 orientations						
Applicable DIN rail			TH35-7.5Fe, TH35-7.5Al (compliant with IEC 60715 and JIS C 2812)						
Applicable solderless terminal			• RAV1.25-3 (compliant with JIS C 2805) [Applicable wire size: 0.3 to 1.25mm^2 (22 to 16 AWG) stranded wire] • V2-MS3, RAP2-3SL, TGV2-3N [Applicable wire size: 1.25 to 2.0mm^2 (16 to 14 AWG) stranded wire]						
Wire	Material		Copper						
	Temperature rating		75°C or more						
Accessory			User's manual						

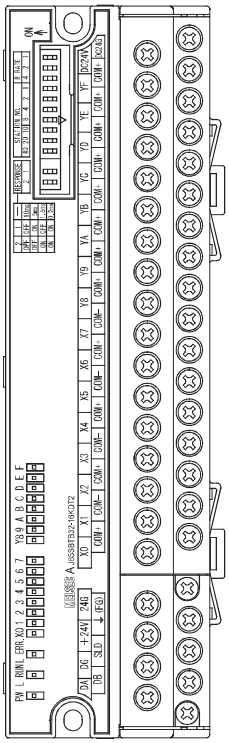

* For applicable solderless terminals connected to the terminal block, refer to the table above. Use applicable wires for the solderless terminals and fix them with an appropriate tightening torque. Use UL listed solderless terminals and, for crimping, use a tool recommended by their manufacturer.

6 - 17

External connection

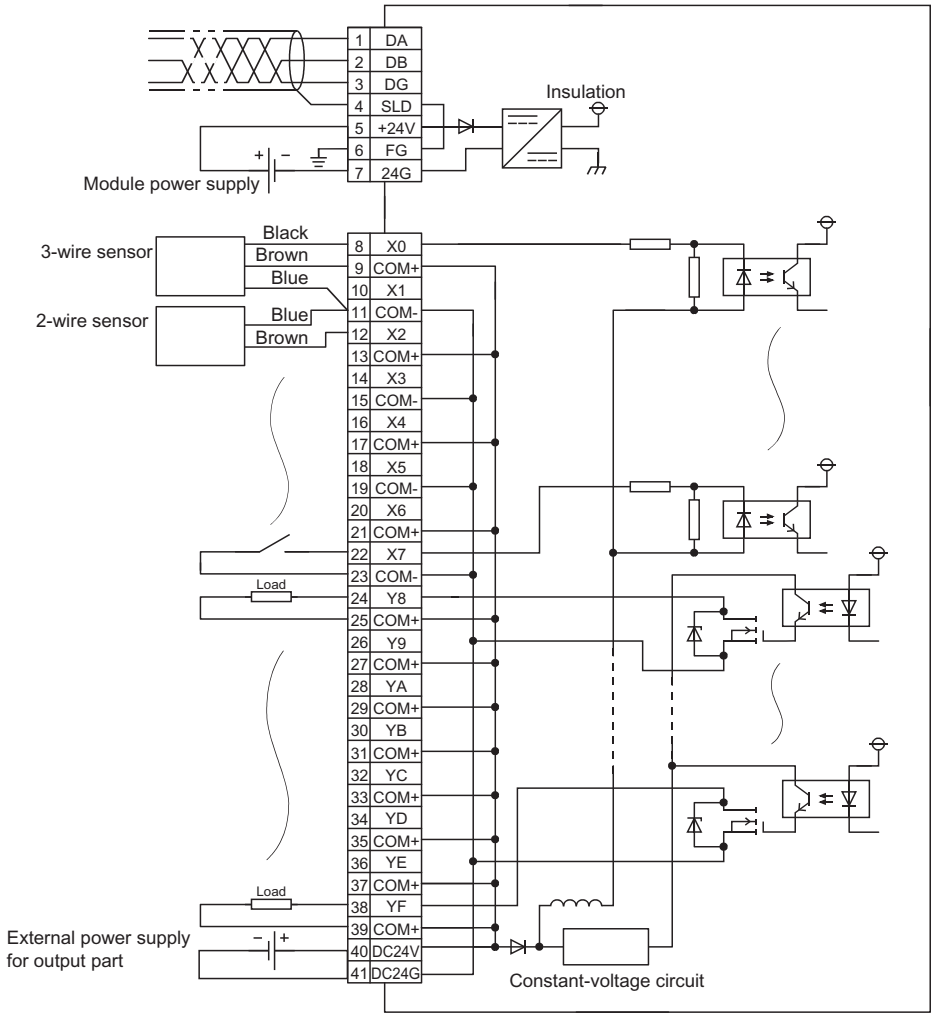

Terminal number	Signal name
TB1	DA
TB2	DB
TB3	DG
TB4	SLD
TB5	+24V
TB6	⏚ (FG)
TB7	24G
TB8	X0
TB9	COM+
TB10	X1
TB11	COM-
TB12	X2
TB13	COM+
TB14	X3
TB15	COM-
TB16	X4
TB17	COM+
TB18	X5
TB19	COM-
TB20	X6
TB21	COM+
TB22	X7
TB23	COM-
TB24	Y8
TB25	COM+
TB26	Y9
TB27	COM+
TB28	YA
TB29	COM+
TB30	YB
TB31	COM+
TB32	YC
TB33	COM+
TB34	YD
TB35	COM+
TB36	YE
TB37	COM+
TB38	YF
TB39	COM+
TB40	DC24V
TB41	DC24G

6 - 18

AbN
automation

6.1.10 AJ65SBTB32-16KDT8 combined module

Item \ Type			DC input transistor output combined module						
			AJ65SBTB32-16KDT8						Appearance
Input							Output		
Number of input points			8 points				Number of output points		8 points
Isolation method			Photocoupler				Isolation method		Photocoupler
Rated input voltage			12VDC (ripple ratio: within 5%)				Rated load voltage		12VDC (ripple ratio: within 5%)
Rated input current			Approx. 11mA				Operating load voltage range		10.2 to 14.4VDC
Operating voltage range			10.2 to 14.4VDC				Max. load current		0.5A/point, 2.4A/common
Max. number of simultaneous input points			100%				Max. inrush current		1.0A, 10ms or less
ON voltage/ON current			5.6VDC or higher/4mA or higher				Leakage current at OFF		0.1mA or lower
OFF voltage/OFF current			2.4VDC or lower/1.7mA or lower				Max. voltage drop at ON		0.3VDC or lower (TYP.) 0.5A, 0.6VDC or lower (MAX.) 0.5A
Input resistance			Approx. 1.0kΩ				Output type		Sink type
							Protection function		None
Response time	Input response speed		0.2ms	1.5ms	5ms	10ms	Response time	OFF→ON	0.5ms or less
	OFF→ON		0.2ms or less	1.5ms or less	5ms or less	10ms or less			
	ON→OFF		0.2ms or less	1.5ms or less	5ms or less	10ms or less		ON→OFF	1.5ms or less (resistive load)
							External power supply for output part	Voltage	12VDC (ripple ratio: within 5%) (allowable voltage range: 10.2 to 14.4VDC)
								Current	10mA or lower (at 12VDC and all points ON), excluding external load current
Input type			Positive common (sink type)				Surge suppressor		Zener diode
Supply current for connected device			1.0A or lower/common						
Wiring method for common			16 points/common (input: 3-wire terminal block type, output: 2-wire terminal block type)						
Number of occupied stations			32-point assignment/station (16 points used)						
Module power supply	Voltage		24VDC (ripple ratio: within 5%) (allowable voltage range: 20.4 to 26.4VDC)						
	Current		55mA or lower (at 24VDC and all points ON)						
Noise immunity			Noise voltage 500Vp-p, noise width 1μs, noise frequency 25 to 60Hz (DC type noise simulator condition)						
Withstand voltage			500VAC for 1 minute between all DC external terminals and ground						
Insulation resistance			10MΩ or higher between all DC external terminals and ground (500VDC insulation resistance tester)						
Protection degree			IP2X						
Weight			0.26kg						
External connection system	Communication part, module power supply part		7-point two-piece terminal block [Transmission circuit, module power supply, FG] M3×5.2 screw (tightening torque range: 0.59 to 0.88N•m) Applicable solderless terminal: 2 or less						
	I/O power supply part, I/O part		34-point direct-mount terminal block [I/O power supply, I/O signal] M3×5.2 screw (tightening torque range: 0.59 to 0.88N•m) Applicable solderless terminal: 2 or less						
Module mounting screw			M4 screw with plain washer finished round (tightening torque range: 0.78 to 1.08N•m) Mountable with a DIN rail in 6 orientations						
Applicable DIN rail			TH35-7.5Fe, TH35-7.5Al (compliant with IEC 60715 and JIS C 2812)						
Applicable solderless terminal			• RAV1.25-3 (compliant with JIS C 2805) [Applicable wire size: 0.3 to 1.25mm^2 (22 to 16 AWG) stranded wire] • V2-MS3, RAP2-3SL, TGV2-3N [Applicable wire size: 1.25 to 2.0mm^2 (16 to 14 AWG) stranded wire]						
Wire	Material		Copper						
	Temperature rating		75°C or more						
Accessory			User's manual						

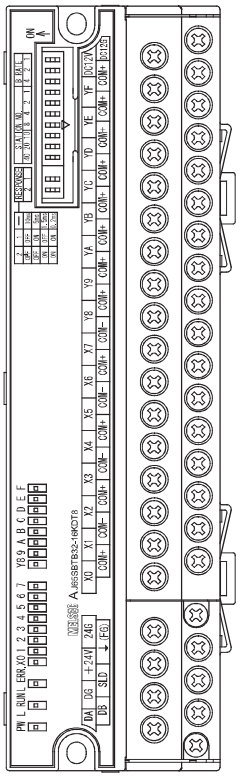

* For applicable solderless terminals connected to the terminal block, refer to the table above. Use applicable wires for the solderless terminals and fix them with an appropriate tightening torque. Use UL listed solderless terminals and, for crimping, use a tool recommended by their manufacturer.

6 - 19

External connection

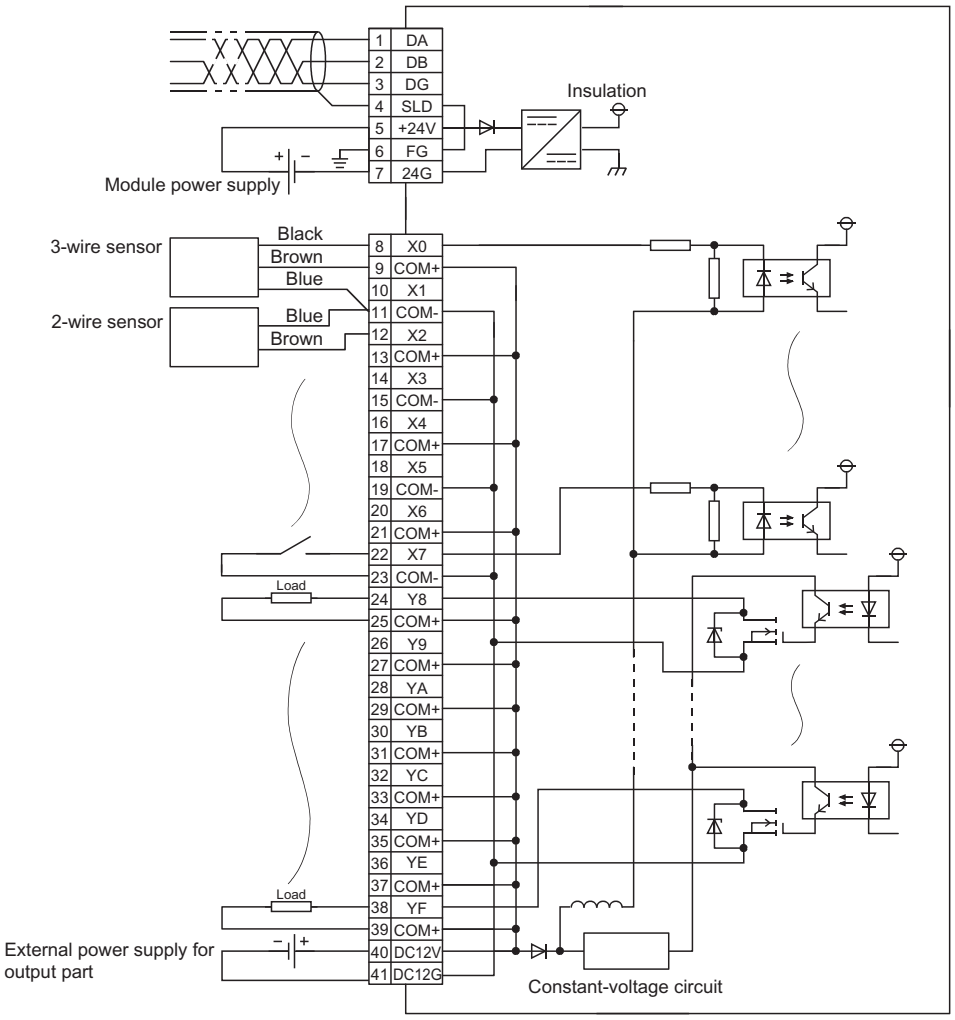

Terminal number	Signal name
TB1	DA
TB2	DB
TB3	DG
TB4	SLD
TB5	+24V
TB6	⏚ (FG)
TB7	24G
TB8	X0
TB9	COM+
TB10	X1
TB11	COM-
TB12	X2
TB13	COM+
TB14	X3
TB15	COM-
TB16	X4
TB17	COM+
TB18	X5
TB19	COM-
TB20	X6
TB21	COM+
TB22	X7
TB23	COM-
TB24	Y8
TB25	COM+
TB26	Y9
TB27	COM+
TB28	YA
TB29	COM+
TB30	YB
TB31	COM+
TB32	YC
TB33	COM+
TB34	YD
TB35	COM+
TB36	YE
TB37	COM+
TB38	YF
TB39	COM+
TB40	DC12V
TB41	DC12G

6 - 20

AbN
automation

6.1.11 AJ65SBTB32-16DR combined module

Item \ Type			DC input contact output combined module			
			AJ65SBTB32-16DR			Appearance
Input			Output			
Number of input points		8 points	Number of output points		8 points	
Isolation method		Photocoupler	Isolation method		Relay	
Rated input voltage		24VDC (ripple ratio: within 5%)	Rated load voltage		2A/point, 4A/common at 24VDC (resistive load) or 240VAC (cosϕ=1)	
Rated input current		Approx. 7mA	Number of simultaneous ON points		All points	
Operating voltage range		19.2 to 26.4VDC	Min. switching load		5VDC, 1mA	
Max. number of simultaneous input points		100%	Max. switching voltage		264VAC, 125VDC	
ON voltage/ON current		14VDC or higher/3.5mA or higher	Life	Mechanical	20 million times or more	
				Electrical	Rated switching voltage/current load: 100 thousand times or more 200VAC 1.5A, 240VAC 1A (cosϕ=0.7): 100 thousand times or more 200VAC 1A, 240VAC 0.5A (cosϕ=0.35): 100 thousand times or more 24VDC 1A, 100VDC 0.1A (L/R=7ms): 100 thousand times or more	
OFF voltage/OFF current		6VDC or lower/1.7mA or lower				
Input resistance		Approx. 3.3kΩ	Max. switching frequency		3600 times/hour	
Response time	OFF→ON	1.5ms or less (at 24VDC)	Response time	OFF→ON	10ms or less	
	ON→OFF	1.5ms or less (at 24VDC)		ON→OFF	12ms or less	
Wiring method for common		8 points/common (3-wire, terminal block type)	Wiring method for common		4 points/common (2-wire, terminal block type)	
Input type		Positive/negative common shared type (sink/source shared type)	Surge suppressor		None	
Supply current for connected device		1.0A or lower/common				
Number of occupied stations		32-point assignment/station (16 points used)				
Module power supply	Voltage	24VDC (ripple ratio: within 5%) (allowable voltage range: 20.4 to 26.4VDC)				
	Current	85mA or lower (at 24VDC and all points ON)				
Noise immunity		Noise voltage: 1500Vp-p (AC type), 500Vp-p (DC type), noise width 1μs, noise frequency 25 to 60Hz (noise simulator condition)				
Withstand voltage		2830VACrms for 3 cycles between all AC external terminals and ground (2000m above sea level) 500VAC for 1 minute between all DC external terminals and ground				
Insulation resistance		10MΩ or higher between all AC external terminals and ground (500VDC insulation resistance tester) 10MΩ or higher between all DC external terminals and ground (500VDC insulation resistance tester)				
Protection degree		IP1X				
Weight		0.28kg				
External connection system	Communication part, module power supply part	7-point two-piece terminal block [Transmission circuit, module power supply, FG] M3×5.2 screw (tightening torque range: 0.59 to 0.88N•m) Applicable solderless terminal: 2 or less				
	I/O power supply part, I/O part	34-point direct-mount terminal block [I/O power supply, I/O signal] M3×5.2 screw (tightening torque range: 0.59 to 0.88N•m) Applicable solderless terminal: 2 or less				
Module mounting screw		M4 screw with plain washer finished round (tightening torque range: 0.78 to 1.08N•m) Mountable with a DIN rail in 6 orientations				
Applicable DIN rail		TH35-7.5Fe, TH35-7.5Al (compliant with IEC 60715 and JIS C 2812)				
Applicable solderless terminal		• RAV1.25-3 (compliant with JIS C 2805) [Applicable wire size: 0.3 to 1.25mm^2 (22 to 16 AWG) stranded wire] • V2-MS3, RAP2-3SL, TGV2-3N [Applicable wire size: 1.25 to 2.0mm^2 (16 to 14 AWG) stranded wire]				
Wire	Material	Copper				
	Temperature rating	75°C or more				
Accessory		User's manual				

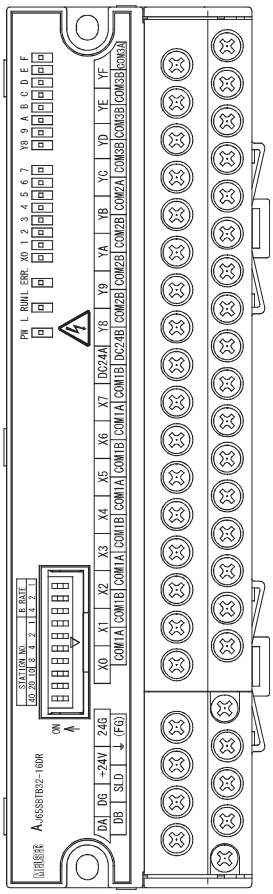

* For applicable solderless terminals connected to the terminal block, refer to the table above. Use applicable wires for the solderless terminals and fix them with an appropriate tightening torque. Use UL listed solderless terminals and, for crimping, use a tool recommended by their manufacturer.

6 - 21

External connection

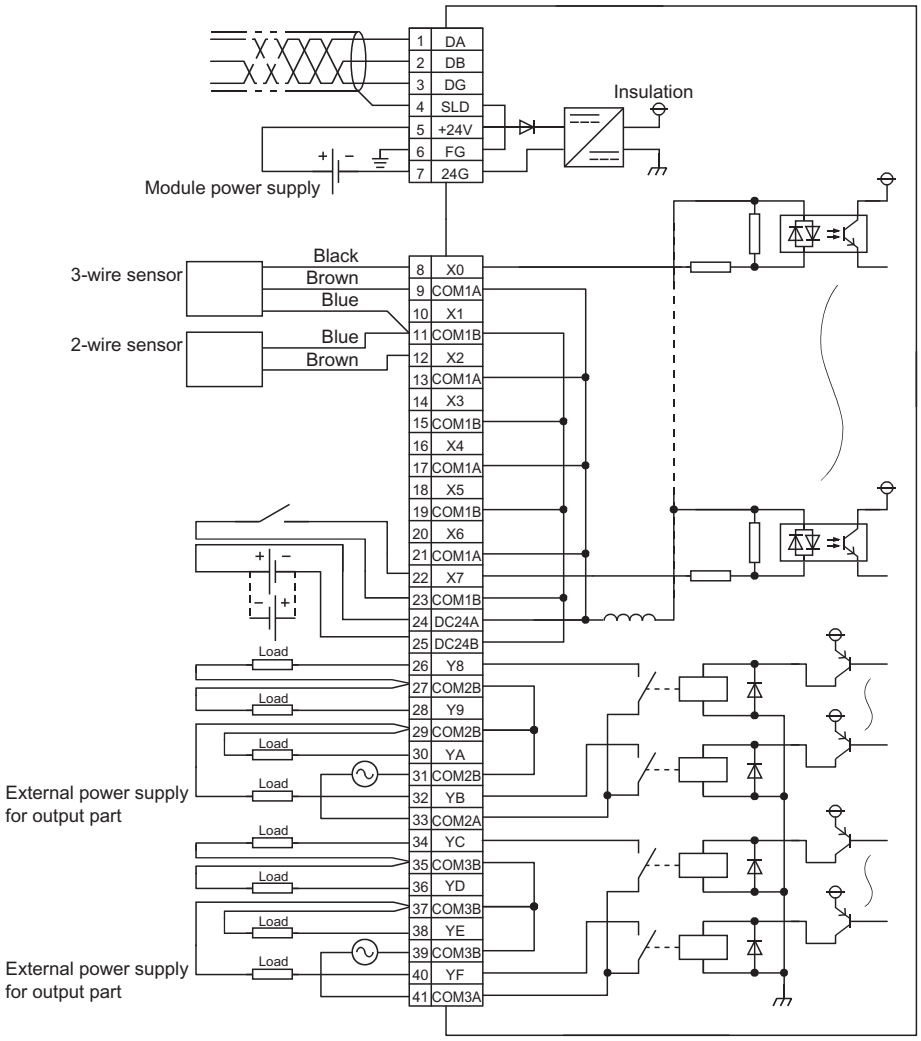

Terminal number	Signal name
TB1	DA
TB2	DB
TB3	DG
TB4	SLD
TB5	+24V
TB6	⏚ (FG)
TB7	24G
TB8	X0
TB9	COM1A
TB10	X1
TB11	COM1B
TB12	X2
TB13	COM1A
TB14	X3
TB15	COM1B
TB16	X4
TB17	COM1A
TB18	X5
TB19	COM1B
TB20	X6
TB21	COM1A
TB22	X7
TB23	COM1B
TB24	DC24A
TB25	DC24B
TB26	Y8
TB27	COM2B
TB28	Y9
TB29	COM2B
TB30	YA
TB31	COM2B
TB32	YB
TB33	COM2A
TB34	YC
TB35	COM3B
TB36	YD
TB37	COM3B
TB38	YE
TB39	COM3B
TB40	YF
TB41	COM3A

6 - 22

AbN
automation

6.1.12 AJ65SBTB32-16KDR combined module

Item \ Type		DC input contact output combined module						
		AJ65SBTB32-16KDR						Appearance
Input						Output		
Number of input points		8 points				Number of output points	8 points	
Isolation method		Photocoupler				Isolation method	Relay	
Rated input voltage		24VDC (ripple ratio: within 5%)				Rated load voltage	2A/point, 4A/common at 24VDC (resistive load) or 240VAC (cosϕ=1)	
Rated input current		Approx. 7mA				Number of simultaneous ON points	All points	
Operating voltage range		20.4 to 28.8VDC				Min. switching load	5VDC, 1mA	
Max. number of simultaneous input points		100%				Max. switching voltage	264VAC, 125VDC	
ON voltage/ON current		14VDC or higher/4mA or higher				Life: Mechanical	20 million times or more	
OFF voltage/OFF current		5.5VDC or lower/1.7mA or lower				Life: Electrical	Rated switching voltage/current load: 100 thousand times or more 200VAC 1.5A, 240VAC 1A (cosϕ=0.7): 100 thousand times or more 200VAC 1A, 240VAC 0.5A (cosϕ=0.35): 100 thousand times or more 24VDC 1A, 100VDC 0.1A (L/R=7ms): 100 thousand times or more	
Input resistance		Approx. 3.0kΩ						
Response time	Input response speed	0.2ms	1.5ms	5ms	10ms			
	OFF→ON	0.2ms or less	1.5ms or less	5ms or less	10ms or less			
	ON→OFF	0.2ms or less	1.5ms or less	5ms or less	10ms or less	Max. switching frequency	3600 times/hour	
Wiring method for common		8 points/common (3-wire, terminal block type)				Response time: OFF→ON	10ms or less	
Input type		Positive/negative common shared type (sink/source shared type)				Response time: ON→OFF	12ms or less	
Supply current for connected device		1.0A or lower/common				Wiring method for common	4 points/common (2-wire, terminal block type)	
						Surge suppressor	None	
Number of occupied stations		32-point assignment/station (16 points used)						
Module power supply	Voltage	24VDC (ripple ratio: within 5%) (allowable voltage range: 20.4 to 26.4VDC)						
	Current	100mA or lower (at 24VDC and all points ON)						
Noise immunity		Noise voltage: 1500Vp-p (AC type), 500Vp-p (DC type), noise width 1μs, noise frequency 25 to 60Hz (noise simulator condition)						
Withstand voltage		2830VACrms for 3 cycles between all AC external terminals and ground (2000m above sea level) 500VAC for 1 minute between all DC external terminals and ground						
Insulation resistance		10MΩ or higher between all AC external terminals and ground (500VDC insulation resistance tester) 10MΩ or higher between all DC external terminals and ground (500VDC insulation resistance tester)						
Protection degree		IP1X						
Weight		0.29kg						
External connection system	Communication part, module power supply part	7-point two-piece terminal block [Transmission circuit, module power supply, FG] M3×5.2 screw (tightening torque range: 0.59 to 0.88N•m) Applicable solderless terminal: 2 or less						
	I/O power supply part, I/O part	34-point direct-mount terminal block [I/O power supply, I/O signal] M3×5.2 screw (tightening torque range: 0.59 to 0.88N•m) Applicable solderless terminal: 2 or less						
Module mounting screw		M4 screw with plain washer finished round (tightening torque range: 0.78 to 1.08N•m) Mountable with a DIN rail in 6 orientations						
Applicable DIN rail		TH35-7.5Fe, TH35-7.5Al (compliant with IEC 60715 and JIS C 2812)						
Applicable solderless terminal		• RAV1.25-3 (compliant with JIS C 2805) [Applicable wire size: 0.3 to 1.25mm^2 (22 to 16 AWG) stranded wire] • V2-MS3, RAP2-3SL, TGV2-3N [Applicable wire size: 1.25 to 2.0mm^2 (16 to 14 AWG) stranded wire]						
Wire	Material	Copper						
	Temperature rating	75°C or more						
Accessory		User's manual						

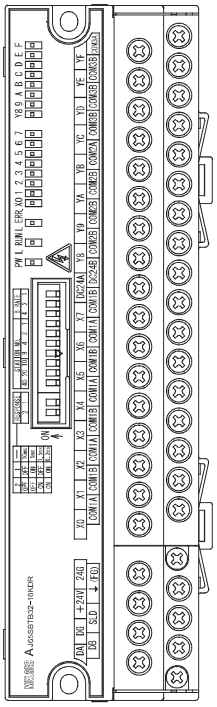

* For applicable solderless terminals connected to the terminal block, refer to the table above. Use applicable wires for the solderless terminals and fix them with an appropriate tightening torque. Use UL listed solderless terminals and, for crimping, use a tool recommended by their manufacturer.

External connection

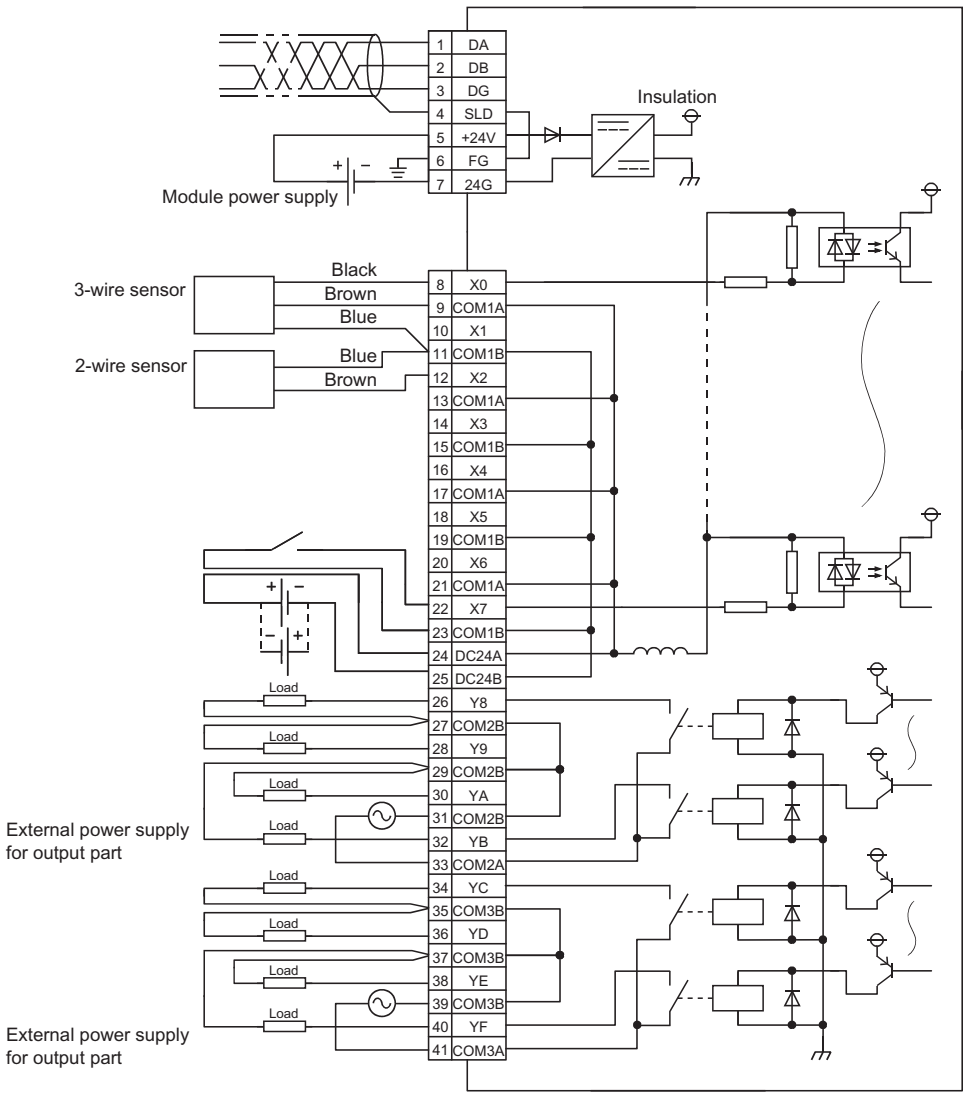

Terminal number	Signal name
TB1	DA
TB2	DB
TB3	DG
TB4	SLD
TB5	+24V
TB6	⏚ (FG)
TB7	24G
TB8	X0
TB9	COM1A
TB10	X1
TB11	COM1B
TB12	X2
TB13	COM1A
TB14	X3
TB15	COM1B
TB16	X4
TB17	COM1A
TB18	X5
TB19	COM1B
TB20	X6
TB21	COM1A
TB22	X7
TB23	COM1B
TB24	DC24A
TB25	DC24B
TB26	Y8
TB27	COM2B
TB28	Y9
TB29	COM2B
TB30	YA
TB31	COM2B
TB32	YB
TB33	COM2A
TB34	YC
TB35	COM3B
TB36	YD
TB37	COM3B
TB38	YE
TB39	COM3B
TB40	YF
TB41	COM3A

6 - 24

AbN
automation

6.1.13 AJ65SBTB1-32DT combined module

Item \ Type			DC input transistor output combined module			
			AJ65SBTB1-32DT			Appearance
Input				Output		
Number of input points			16 points	Number of output points		16 points
Isolation method			Photocoupler	Isolation method		Photocoupler
Rated input voltage			24VDC (ripple ratio: within 5%)	Rated load voltage		24VDC (ripple ratio: within 5%)
Rated input current			Approx. 7mA	Operating load voltage range		19.2 to 26.4VDC
Operating voltage range			19.2 to 26.4VDC	Max. load current		0.5A/point, 3.6A/common
Max. number of simultaneous input points			100%	Max. inrush current		1.0A, 10ms or less
ON voltage/ON current			14VDC or higher/3.5mA or higher	Leakage current at OFF		0.25mA or lower
OFF voltage/OFF current			6VDC or lower/1.7mA or lower	Max. voltage drop at ON		0.3VDC or lower (TYP.) 0.5A, 0.6VDC or lower (MAX.) 0.5A
Input resistance			Approx. 3.3kΩ	Output type		Sink type
				Protection function		Overload protection, overvoltage protection, overheat protection
Response time	OFF→ON		1.5ms or less (at 24VDC)	Response time	OFF→ON	0.5ms or less
	ON→OFF		1.5ms or less (at 24VDC)		ON→OFF	1.5ms or less (resistive load)
				External power supply for output part	Voltage	24VDC (ripple ratio: within 5%) (allowable voltage range: 19.2 to 26.4VDC)
					Current	30mA or lower (24VDC/common), excluding external load current
Input type			Positive common (sink type)	Surge suppressor		Zener diode
Wiring method for common			32 points/common (1-wire, terminal block type)			
Number of occupied stations			32-point assignment/station (32 points used)			
Module power supply	Voltage		24VDC (ripple ratio: within 5%) (allowable voltage range: 20.4 to 26.4VDC)			
	Current		60mA or lower (at 24VDC and all points ON)			
Noise immunity			Noise voltage 500Vp-p, noise width 1μs, noise frequency 25 to 60Hz (DC type noise simulator condition)			
Withstand voltage			500VAC for 1 minute between all DC external terminals and ground			
Insulation resistance			10MΩ or higher between all DC external terminals and ground (500VDC insulation resistance tester)			
Protection degree			IP2X			
Weight			0.25kg			
External connection system	Communication part, module power supply part		7-point two-piece terminal block [Transmission circuit, module power supply, FG] M3×5.2 screw (tightening torque range: 0.59 to 0.88N•m) Applicable solderless terminal: 2 or less			
	I/O power supply part, I/O part		34-point direct-mount terminal block [I/O power supply, I/O signal] M3×5.2 screw (tightening torque range: 0.59 to 0.88N•m) Applicable solderless terminal: 2 or less			
Module mounting screw			M4 screw with plain washer finished round (tightening torque range: 0.78 to 1.08N•m) Mountable with a DIN rail in 6 orientations			
Applicable DIN rail			TH35-7.5Fe, TH35-7.5Al (compliant with IEC 60715 and JIS C 2812)			
Applicable solderless terminal			• RAV1.25-3 (compliant with JIS C 2805) [Applicable wire size: 0.3 to 1.25mm^2 (22 to 16 AWG) stranded wire] • V2-MS3, RAP2-3SL, TGV2-3N [Applicable wire size: 1.25 to 2.0mm^2 (16 to 14 AWG) stranded wire]			
Wire	Material		Copper			
	Temperature rating		75°C or more			
Accessory			User's manual			

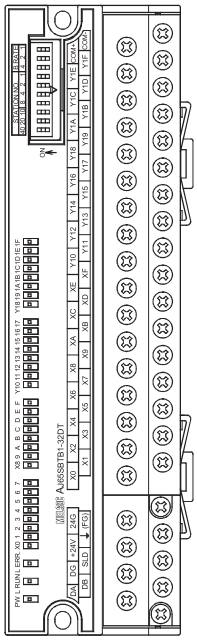

* For applicable solderless terminals connected to the terminal block, refer to the table above. Use applicable wires for the solderless terminals and fix them with an appropriate tightening torque. Use UL listed solderless terminals and, for crimping, use a tool recommended by their manufacturer.

6 - 25

External connection

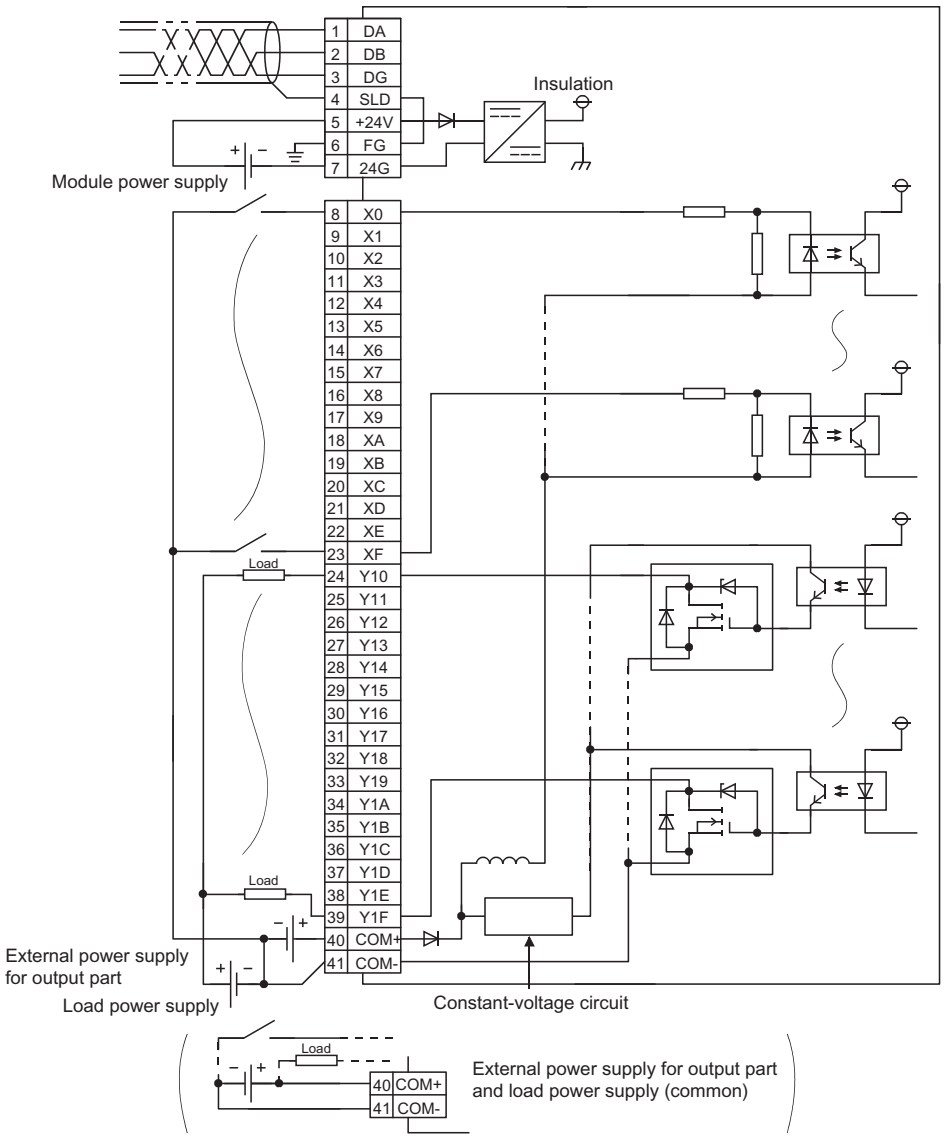

Terminal number	Signal name
TB1	DA
TB2	DB
TB3	DG
TB4	SLD
TB5	+24V
TB6	⏚ (FG)
TB7	24G
TB8	X0
TB9	X1
TB10	X2
TB11	X3
TB12	X4
TB13	X5
TB14	X6
TB15	X7
TB16	X8
TB17	X9
TB18	XA
TB19	XB
TB20	XC
TB21	XD
TB22	XE
TB23	XF
TB24	Y10
TB25	Y11
TB26	Y12
TB27	Y13
TB28	Y14
TB29	Y15
TB30	Y16
TB31	Y17
TB32	Y18
TB33	Y19
TB34	Y1A
TB35	Y1B
TB36	Y1C
TB37	Y1D
TB38	Y1E
TB39	Y1F
TB40	COM+
TB41	COM-

6 - 26

AbN
automation

6.1.14 AJ65SBTB1-32DT1 combined module

Item \ Type		DC input transistor output combined module			
		AJ65SBTB1-32DT1			Appearance
Input			Output		
Number of input points		16 points	Number of output points		16 points
Isolation method		Photocoupler	Isolation method		Photocoupler
Rated input voltage		24VDC (ripple ratio: within 5%)	Rated load voltage		24VDC (ripple ratio: within 5%)
Rated input current		Approx. 5mA	Operating load voltage range		19.2 to 26.4VDC
Operating voltage range		19.2 to 26.4VDC	Max. load current		0.5A/point, 3.6A/common
Max. number of simultaneous input points		100%	Max. inrush current		1.0A, 10ms or less
ON voltage/ON current		15VDC or higher/3mA or higher	Leakage current at OFF		0.25mA or lower
OFF voltage/OFF current		3VDC or lower/0.5mA or lower	Max. voltage drop at ON		0.3VDC or lower (TYP.) 0.5A, 0.6VDC or lower (MAX.) 0.5A
Input resistance		Approx. 4.7kΩ	Output type		Sink type
			Protection function		Overload protection, overvoltage protection, overheat protection
Response time	OFF→ON	0.2ms or less (at 24VDC)	Response time	OFF→ON	0.5ms or less
	ON→OFF	0.2ms or less (at 24VDC)		ON→OFF	1.5ms or less (resistive load)
			External power supply for output part	Voltage	24VDC (ripple ratio: within 5%) (allowable voltage range: 19.2 to 26.4VDC)
				Current	24.2mA or lower (at 24VDC and all points ON), excluding external load current
Input type		Positive common (sink type)	Surge suppressor		Zener diode
Wiring method for common		32 points/common (1-wire, terminal block type)			
Number of occupied stations		32-point assignment/station (32 points used)			
Module power supply	Voltage	24VDC (ripple ratio: within 5%) (allowable voltage range: 20.4 to 26.4VDC)			
	Current	60mA or lower (at 24VDC and all points ON)			
Noise immunity		Noise voltage 500Vp-p, noise width 1μs, noise frequency 25 to 60Hz (DC type noise simulator condition)			
Withstand voltage		500VAC for 1 minute between all DC external terminals and ground			
Insulation resistance		10MΩ or higher between all DC external terminals and ground (500VDC insulation resistance tester)			
Protection degree		IP2X			
Weight		0.25kg			
External connection system	Communication part, module power supply part	7-point two-piece terminal block [Transmission circuit, module power supply, FG] M3×5.2 screw (tightening torque range: 0.59 to 0.88N•m) Applicable solderless terminal: 2 or less			
	I/O power supply part, I/O part	34-point direct-mount terminal block [I/O power supply, I/O signal] M3×5.2 screw (tightening torque range: 0.59 to 0.88N•m) Applicable solderless terminal: 2 or less			
Module mounting screw		M4 screw with plain washer finished round (tightening torque range: 0.78 to 1.08N•m) Mountable with a DIN rail in 6 orientations			
Applicable DIN rail		TH35-7.5Fe, TH35-7.5Al (compliant with IEC 60715 and JIS C 2812)			
Applicable solderless terminal		• RAV1.25-3 (compliant with JIS C 2805) [Applicable wire size: 0.3 to 1.25mm^2 (22 to 16 AWG) stranded wire] • V2-MS3, RAP2-3SL, TGV2-3N [Applicable wire size: 1.25 to 2.0mm^2 (16 to 14 AWG) stranded wire]			
Wire	Material	Copper			
	Temperature rating	75°C or more			
Accessory		User's manual			

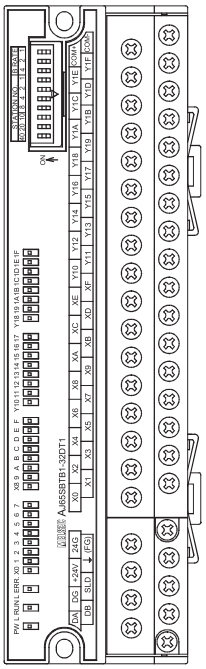

* For applicable solderless terminals connected to the terminal block, refer to the table above. Use applicable wires for the solderless terminals and fix them with an appropriate tightening torque. Use UL listed solderless terminals and, for crimping, use a tool recommended by their manufacturer.

6 - 27

External connection

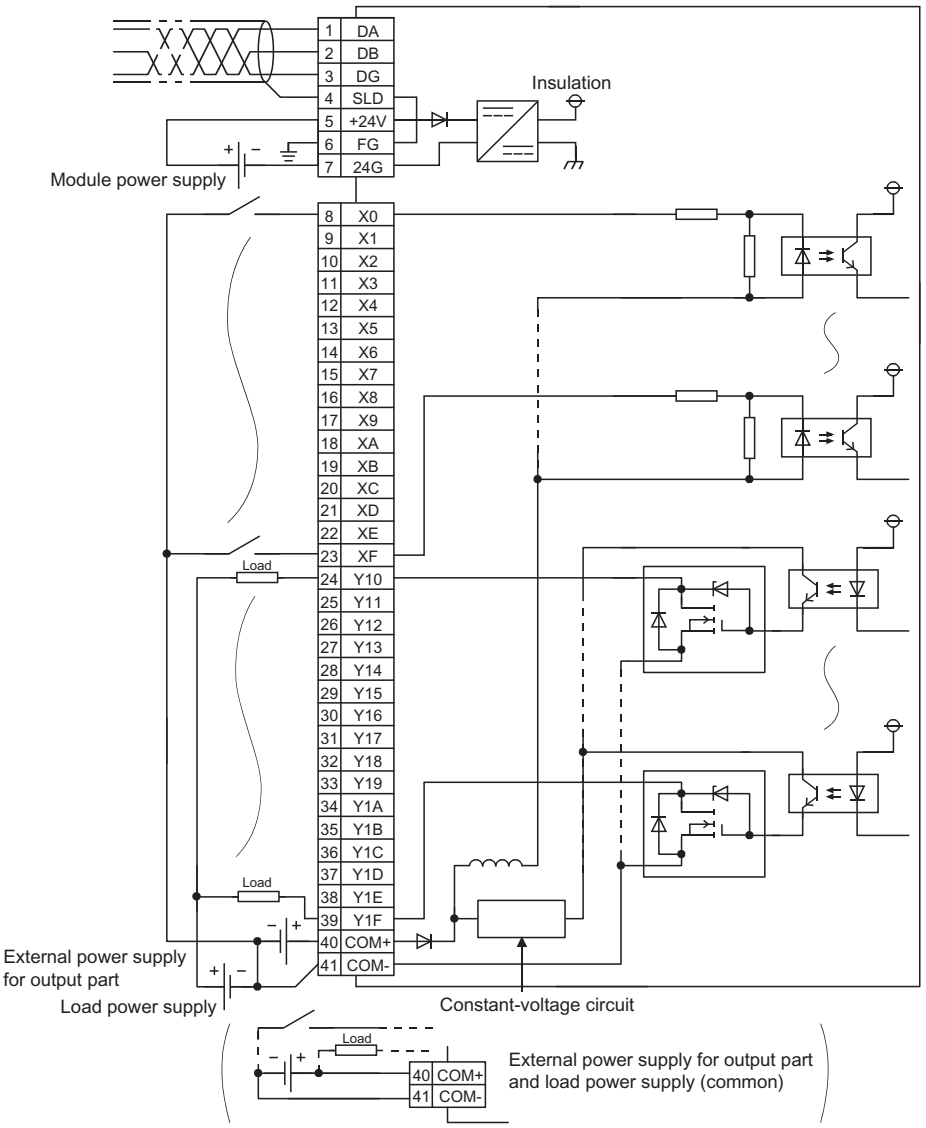

Terminal number	Signal name
TB1	DA
TB2	DB
TB3	DG
TB4	SLD
TB5	+24V
TB6	⏚ (FG)
TB7	24G
TB8	X0
TB9	X1
TB10	X2
TB11	X3
TB12	X4
TB13	X5
TB14	X6
TB15	X7
TB16	X8
TB17	X9
TB18	XA
TB19	XB
TB20	XC
TB21	XD
TB22	XE
TB23	XF
TB24	Y10
TB25	Y11
TB26	Y12
TB27	Y13
TB28	Y14
TB29	Y15
TB30	Y16
TB31	Y17
TB32	Y18
TB33	Y19
TB34	Y1A
TB35	Y1B
TB36	Y1C
TB37	Y1D
TB38	Y1E
TB39	Y1F
TB40	COM+
TB41	COM-

6 - 28

AbN
automation

6.1.15 AJ65SBTB1-32DT2 combined module

Item \ Type		DC input transistor output combined module			
		AJ65SBTB1-32DT2			Appearance
Input			Output		
Number of input points		16 points	Number of output points		16 points
Isolation method		Photocoupler	Isolation method		Photocoupler
Rated input voltage		24VDC (ripple ratio: within 5%)	Rated load voltage		24VDC (ripple ratio: within 5%)
Rated input current		Approx. 7mA	Operating load voltage range		19.2 to 26.4VDC
Operating voltage range		19.2 to 26.4VDC	Max. load current		0.5A/point, 3.6A/common
Max. number of simultaneous input points		100%	Max. inrush current		1.0A, 10ms or less
ON voltage/ON current		14VDC or higher/3.5mA or higher	Leakage current at OFF		0.1mA or lower
OFF voltage/OFF current		6VDC or lower/1.7mA or lower	Max. voltage drop at ON		0.3VDC or lower (TYP.) 0.5A, 0.6VDC or lower (MAX.) 0.5A
Input resistance		Approx. 3.3kΩ	Output type		Sink type
			Protection function		None
Response time	OFF→ON	1.5ms or less (at 24VDC)	Response time	OFF→ON	0.5ms or less
	ON→OFF	1.5ms or less (at 24VDC)		ON→OFF	1.5ms or less (resistive load)
			External power supply for output part	Voltage	24VDC (ripple ratio: within 5%) (allowable voltage range: 19.2 to 26.4VDC)
				Current	30mA or lower (at 24VDC and all points ON), excluding external load current
Input type		Positive common (sink type)	Surge suppressor		Zener diode
Wiring method for common		32 points/common (1-wire, terminal block type)			
Number of occupied stations		32-point assignment/station (32 points used)			
Module power supply	Voltage	24VDC (ripple ratio: within 5%) (allowable voltage range: 20.4 to 26.4VDC)			
	Current	60mA or lower (at 24VDC and all points ON)			
Noise immunity		Noise voltage 500Vp-p, noise width 1μs, noise frequency 25 to 60Hz (DC type noise simulator condition)			
Withstand voltage		500VAC for 1 minute between all DC external terminals and ground			
Insulation resistance		10MΩ or higher between all DC external terminals and ground (500VDC insulation resistance tester)			
Protection degree		IP2X			
Weight		0.25kg			
External connection system	Communication part, module power supply part	7-point two-piece terminal block [Transmission circuit, module power supply, FG] M3×5.2 screw (tightening torque range:0.59 to 0.88N•m) Applicable solderless terminal: 2 or less			
	I/O power supply part, I/O part	34-point direct-mount terminal block [I/O power supply, I/O signal] M3×5.2 screw (tightening torque range:0.59 to 0.88N•m) Applicable solderless terminal: 2 or less			
Module mounting screw		M4 screw with plain washer finished round (tightening torque range: 0.78 to 1.08N•m) Mountable with a DIN rail in 6 orientations			
Applicable DIN rail		TH35-7.5Fe, TH35-7.5Al (compliant with IEC 60715 and JIS C 2812)			
Applicable solderless terminal		• RAV1.25-3 (compliant with JIS C 2805) [Applicable wire size: 0.3 to 1.25mm^2 (22 to 16 AWG) stranded wire] • V2-MS3, RAP2-3SL, TGV2-3N [Applicable wire size: 1.25 to 2.0mm^2 (16 to 14 AWG) stranded wire]			
Wire	Material	Copper			
	Temperature rating	75°C or more			
Accessory		User's manual			

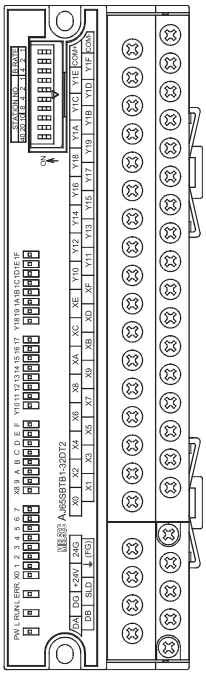

* For applicable solderless terminals connected to the terminal block, refer to the table above. Use applicable wires for the solderless terminals and fix them with an appropriate tightening torque. Use UL listed solderless terminals and, for crimping, use a tool recommended by their manufacturer.

6 - 29

External connection

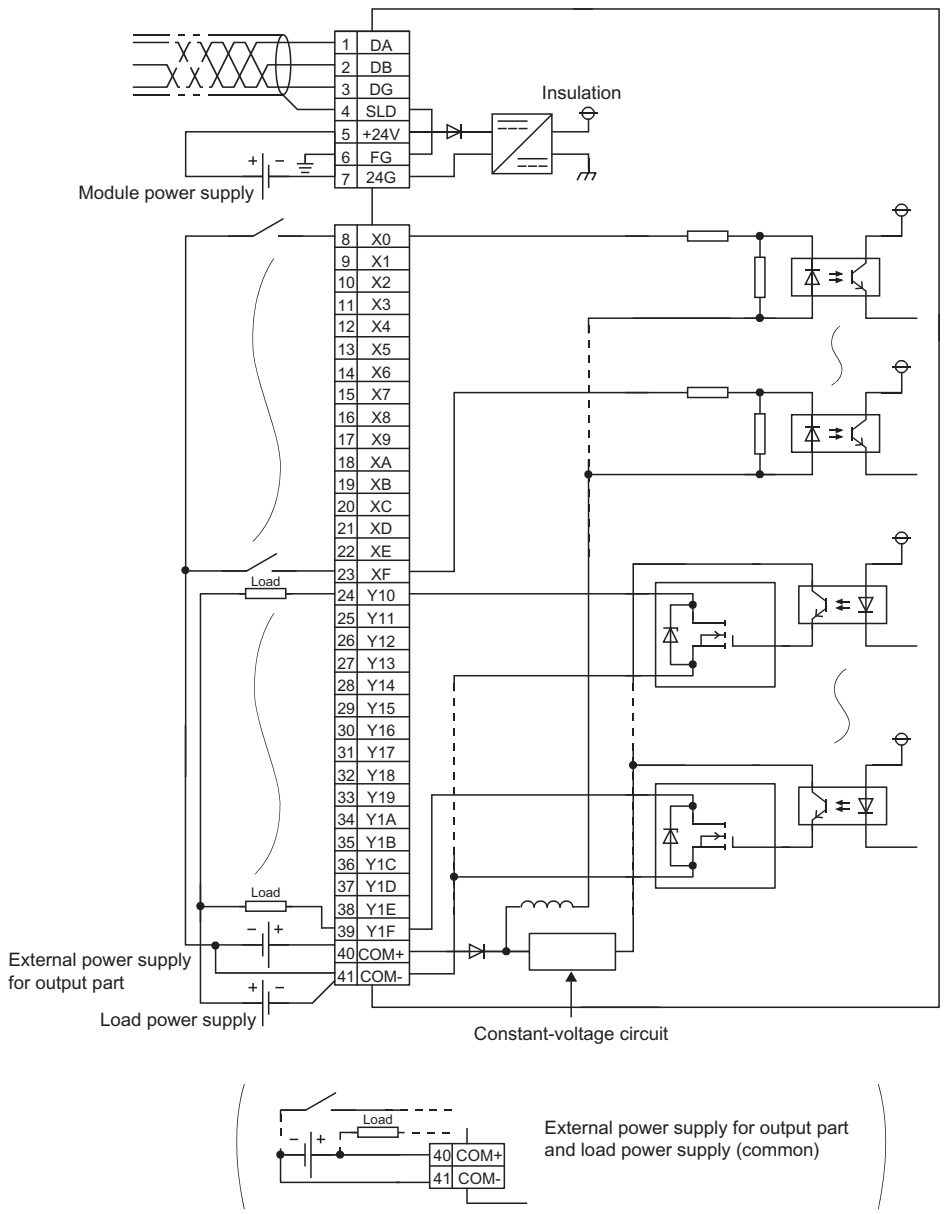

Terminal number	Signal name
TB1	DA
TB2	DB
TB3	DG
TB4	SLD
TB5	+24V
TB6	⏚ (FG)
TB7	24G
TB8	X0
TB9	X1
TB10	X2
TB11	X3
TB12	X4
TB13	X5
TB14	X6
TB15	X7
TB16	X8
TB17	X9
TB18	XA
TB19	XB
TB20	XC
TB21	XD
TB22	XE
TB23	XF
TB24	Y10
TB25	Y11
TB26	Y12
TB27	Y13
TB28	Y14
TB29	Y15
TB30	Y16
TB31	Y17
TB32	Y18
TB33	Y19
TB34	Y1A
TB35	Y1B
TB36	Y1C
TB37	Y1D
TB38	Y1E
TB39	Y1F
TB40	COM+
TB41	COM-

6 - 30

AbN
automation

6.1.16 AJ65SBTB1-32KDT2 combined module

Item \ Type		DC input transistor output combined module							
		AJ65SBTB1-32KDT2							Appearance
Input						Output			
Number of input points		16 points				Number of output points		16 points	
Isolation method		Photocoupler				Isolation method		Photocoupler	
Rated input voltage		24VDC (ripple ratio: within 5%)				Rated load voltage		24VDC (ripple ratio: within 5%)	
Rated input current		Approx. 7mA				Operating load voltage range		20.4 to 28.8VDC	
Operating voltage range		20.4 to 28.8VDC				Max. load current		0.5A/point, 3.6A/common	
Max. number of simultaneous input points		100% (at 26.4VDC), 75% (at 28.8VDC)				Max. inrush current		1.0A, 10ms or less	
ON voltage/ON current		14VDC or higher/4mA or higher				Leakage current at OFF		0.1mA or lower	
OFF voltage/OFF current		5.5VDC or lower/1.7mA or lower				Max. voltage drop at ON		0.3VDC or lower (TYP.) 0.5A, 0.6VDC or lower (MAX.) 0.5A	
Input resistance		Approx. 3.0kΩ				Output type		Sink type	
						Protection function		None	
Response time	Input response speed	0.2ms	1.5ms	5ms	10ms	Response time	OFF→ON	0.5ms or less	
							ON→OFF	1.5ms or less (resistive load)	
	OFF→ON	0.2ms or less	1.5ms or less	5ms or less	10ms or less	External power supply for output part	Voltage	24VDC (ripple ratio: within 5%) (allowable voltage range: 19.2 to 28.8VDC)	
	ON→OFF	0.2ms or less	1.5ms or less	5ms or less	10ms or less		Current	15mA or lower (at 24VDC and all points ON), excluding external load current	
Input type		Positive common (sink type)				Surge suppressor		Zener diode	
Wiring method for common		32 points/common (1-wire, terminal block type)							
Number of occupied stations		32-point assignment/station (32 points used)							
Module power supply	Voltage	24VDC (ripple ratio: within 5%) (allowable voltage range: 20.4 to 26.4VDC)							
	Current	65mA or lower (at 24VDC and all points ON)							
Noise immunity		Noise voltage 500Vp-p, noise width 1μs, noise frequency 25 to 60Hz (DC type noise simulator condition)							
Withstand voltage		500VAC for 1 minute between all DC external terminals and ground							
Insulation resistance		10MΩ or higher between all DC external terminals and ground (500VDC insulation resistance tester)							
Protection degree		IP2X							
Weight		0.26kg							
External connection system	Communication part, module power supply part	7-point two-piece terminal block [Transmission circuit, module power supply, FG] M3×5.2 screw (tightening torque range: 0.59 to 0.88N•m) Applicable solderless terminal: 2 or less							
	I/O power supply part, I/O part	34-point direct-mount terminal block [I/O power supply, I/O signal] M3×5.2 screw (tightening torque range: 0.59 to 0.88N•m) Applicable solderless terminal: 2 or less							
Module mounting screw		M4 screw with plain washer finished round (tightening torque range: 0.78 to 1.08N•m) Mountable with a DIN rail in 6 orientations							
Applicable DIN rail		TH35-7.5Fe, TH35-7.5Al (compliant with IEC 60715 and JIS C 2812)							
Applicable solderless terminal		• RAV1.25-3 (compliant with JIS C 2805) [Applicable wire size: 0.3 to 1.25mm^2 (22 to 16 AWG) stranded wire] • V2-MS3, RAP2-3SL, TGV2-3N [Applicable wire size: 1.25 to 2.0mm^2 (16 to 14 AWG) stranded wire]							
Wire	Material	Copper							
	Temperature rating	75°C or more							
Accessory		User's manual							

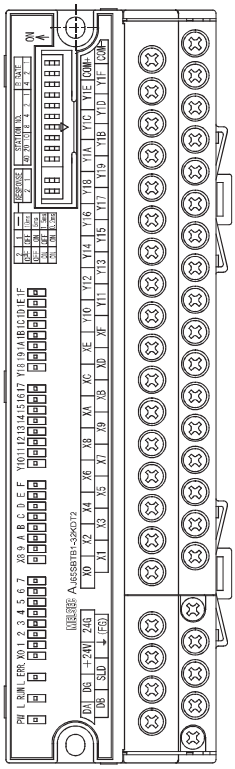

* For applicable solderless terminals connected to the terminal block, refer to the table above. Use applicable wires for the solderless terminals and fix them with an appropriate tightening torque. Use UL listed solderless terminals and, for crimping, use a tool recommended by their manufacturer.

6 - 31

External connection

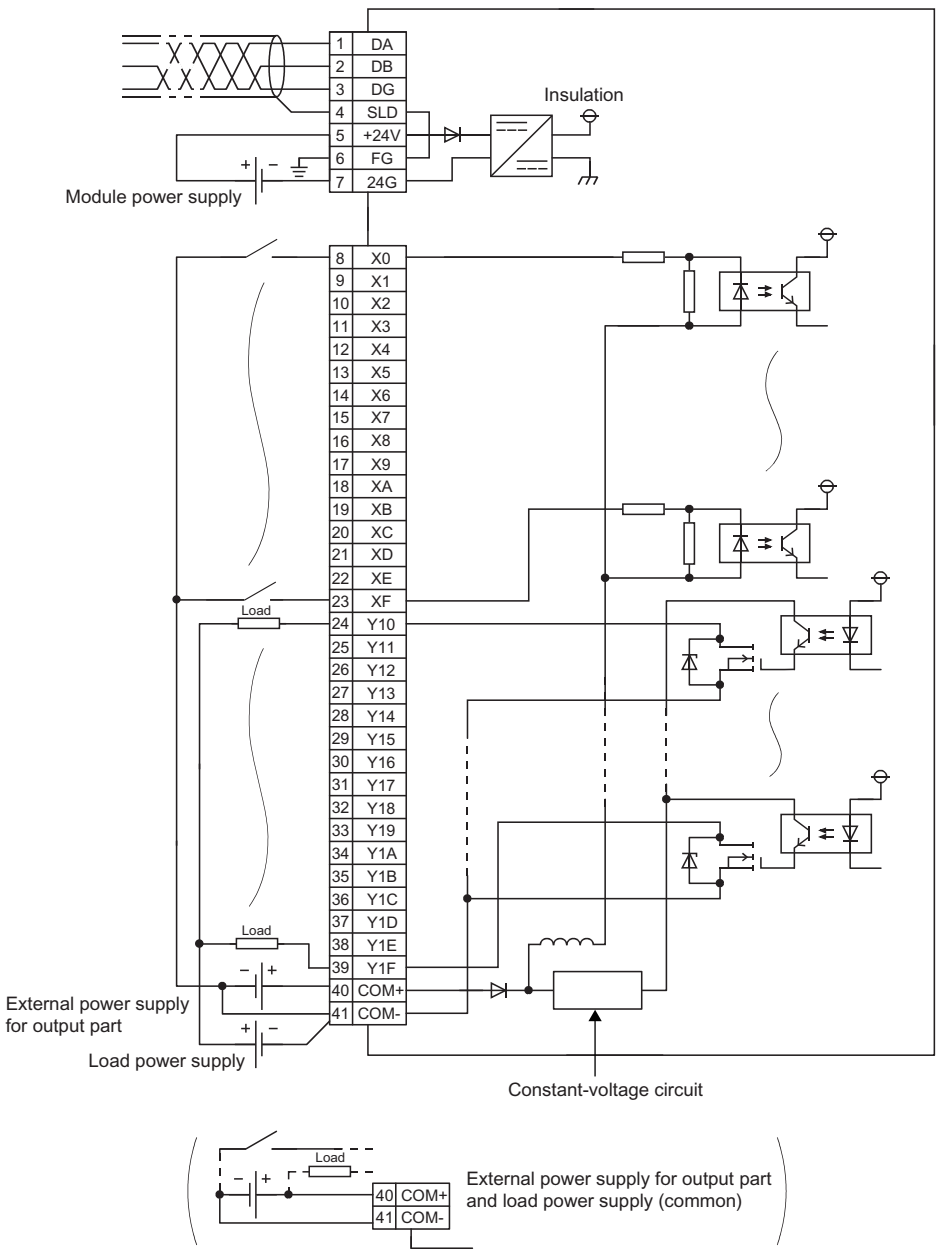

Terminal number	Signal name
TB1	DA
TB2	DB
TB3	DG
TB4	SLD
TB5	+24V
TB6	⏚ (FG)
TB7	24G
TB8	X0
TB9	X1
TB10	X2
TB11	X3
TB12	X4
TB13	X5
TB14	X6
TB15	X7
TB16	X8
TB17	X9
TB18	XA
TB19	XB
TB20	XC
TB21	XD
TB22	XE
TB23	XF
TB24	Y10
TB25	Y11
TB26	Y12
TB27	Y13
TB28	Y14
TB29	Y15
TB30	Y16
TB31	Y17
TB32	Y18
TB33	Y19
TB34	Y1A
TB35	Y1B
TB36	Y1C
TB37	Y1D
TB38	Y1E
TB39	Y1F
TB40	COM+
TB41	COM-

6 - 32

AbN
automation

6.1.17 AJ65SBTB1-32DT3 combined module

Item \ Type			DC input transistor output combined module			
			AJ65SBTB1-32DT3			Appearance
Input				Output		
Number of input points			16 points	Number of output points		16 points
Isolation method			Photocoupler	Isolation method		Photocoupler
Rated input voltage			24VDC (ripple ratio: within 5%)	Rated load voltage		24VDC (ripple ratio: within 5%)
Rated input current			Approx. 5mA	Operating load voltage range		19.2 to 26.4VDC
Operating voltage range			19.2 to 26.4VDC	Max. load current		0.5A/point, 3.6A/common
Max. number of simultaneous input points			100%	Max. inrush current		1.0A, 10ms or less
ON voltage/ON current			15VDC or higher/3mA or higher	Leakage current at OFF		0.1mA or lower
OFF voltage/OFF current			3VDC or lower/0.5mA or lower	Max. voltage drop at ON		0.3VDC or lower (TYP.) 0.5A, 0.6VDC or lower (MAX.) 0.5A
Input resistance			Approx. 4.7kΩ	Output type		Sink type
				Protection function		None
Response time	OFF→ON		0.2ms or less (at 24VDC)	Response time	OFF→ON	0.5ms or less
	ON→OFF		0.2ms or less (at 24VDC)		ON→OFF	1.5ms or less (resistive load)
				External power supply for output part	Voltage	24VDC (ripple ratio: within 5%) (allowable voltage range: 19.2 to 26.4VDC)
					Current	24.2mA or lower (at 24VDC and all points ON), excluding external load current
Input type			Positive common (sink type)	Surge suppressor		Zener diode
Wiring method for common			32 points/common (1-wire, terminal block type)			
Number of occupied stations			32-point assignment/station (32 points used)			
Module power supply	Voltage		24VDC (ripple ratio: within 5%) (allowable voltage range: 20.4 to 26.4VDC)			
	Current		60mA or lower (at 24VDC and all points ON)			
Noise immunity			Noise voltage 500Vp-p, noise width 1μs, noise frequency 25 to 60Hz (DC type noise simulator condition)			
Withstand voltage			500VAC for 1 minute between all DC external terminals and ground			
Insulation resistance			10MΩ or higher between all DC external terminals and ground (500VDC insulation resistance tester)			
Protection degree			IP2X			
Weight			0.25kg			
External connection system	Communication part, module power supply part		7-point two-piece terminal block [Transmission circuit, module power supply, FG] M3×5.2 screw (tightening torque range: 0.59 to 0.88N•m) Applicable solderless terminal: 2 or less			
	I/O power supply part, I/O part		34-point direct-mount terminal block [I/O power supply, I/O signal] M3×5.2 screw (tightening torque range: 0.59 to 0.88N•m) Applicable solderless terminal: 2 or less			
Module mounting screw			M4 screw with plain washer finished round (tightening torque range: 0.78 to 1.08N•m) Mountable with a DIN rail in 6 orientations			
Applicable DIN rail			TH35-7.5Fe, TH35-7.5Al (compliant with IEC 60715 and JIS C 2812)			
Applicable solderless terminal			• RAV1.25-3 (compliant with JIS C 2805) [Applicable wire size: 0.3 to 1.25mm^2 (22 to 16 AWG) stranded wire] • V2-MS3, RAP2-3SL, TGV2-3N [Applicable wire size: 1.25 to 2.0mm^2 (16 to 14 AWG) stranded wire]			
Wire	Material		Copper			
	Temperature rating		75°C or more			
Accessory			User's manual			

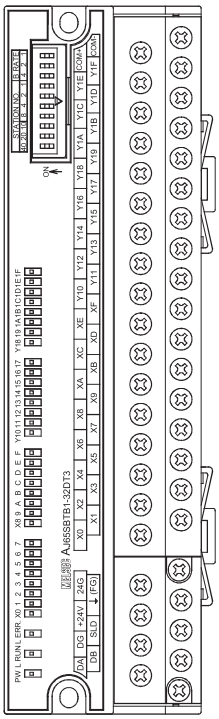

* For applicable solderless terminals connected to the terminal block, refer to the table above. Use applicable wires for the solderless terminals and fix them with an appropriate tightening torque. Use UL listed solderless terminals and, for crimping, use a tool recommended by their manufacturer.

6 - 33

External connection

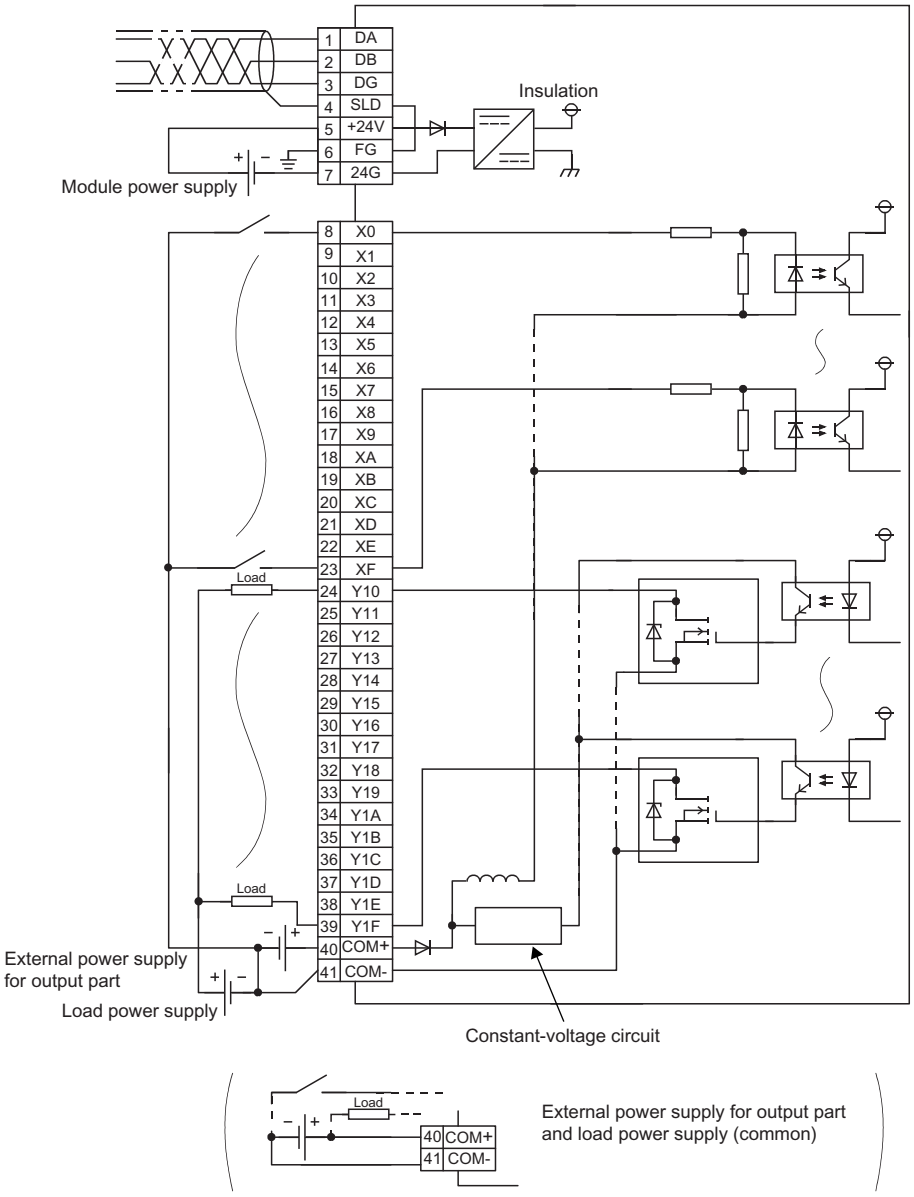

Terminal number	Signal name
TB1	DA
TB2	DB
TB3	DG
TB4	SLD
TB5	+24V
TB6	⏚ (FG)
TB7	24G
TB8	X0
TB9	X1
TB10	X2
TB11	X3
TB12	X4
TB13	X5
TB14	X6
TB15	X7
TB16	X8
TB17	X9
TB18	XA
TB19	XB
TB20	XC
TB21	XD
TB22	XE
TB23	XF
TB24	Y10
TB25	Y11
TB26	Y12
TB27	Y13
TB28	Y14
TB29	Y15
TB30	Y16
TB31	Y17
TB32	Y18
TB33	Y19
TB34	Y1A
TB35	Y1B
TB36	Y1C
TB37	Y1D
TB38	Y1E
TB39	Y1F
TB40	COM+
TB41	COM-

6 - 34

AbN
automation

6.1.18 AJ65SBTB1-32KDT8 combined module

Item \ Type			DC input transistor output combined module						
			AJ65SBTB1-32KDT8						Appearance
Input						Output			
Number of input points			16 points			Number of output points		16 points	
Isolation method			Photocoupler			Isolation method		Photocoupler	
Rated input voltage			12VDC (ripple ratio: within 5%)			Rated load voltage		12VDC (ripple ratio: within 5%)	
Rated input current			Approx. 11mA			Operating load voltage range		10.2 to 14.4VDC	
Operating voltage range			10.2 to 14.4VDC			Max. load current		0.5A/point, 3.6A/common	
Max. number of simultaneous input points			100%			Max. inrush current		1.0A, 10ms or less	
ON voltage/ON current			5.6VDC or higher/4mA or higher			Leakage current at OFF		0.1mA or lower	
OFF voltage/OFF current			2.4VDC or lower/1.7mA or lower			Max. voltage drop at ON		0.3VDC or lower (TYP.) 0.5A, 0.6VDC or lower (MAX.) 0.5A	
Input resistance			Approx. 1.0kΩ			Output type		Sink type	
						Protection function		None	
Response time	Input response speed		0.2ms	1.5ms	5ms	10ms	Response time	OFF→ON	0.5ms or less
	OFF→ON		0.2ms or less	1.5ms or less	5ms or less	10ms or less			
	ON→OFF		0.2ms or less	1.5ms or less	5ms or less	10ms or less		ON→OFF	1.5ms or less (resistive load)
							External power supply for output part	Voltage	12VDC (ripple ratio: within 5%) (allowable voltage range: 10.2 to 14.4VDC)
								Current	15mA or lower (at 12VDC and all points ON), excluding external load current
Input type			Positive common (sink type)				Surge suppressor		Zener diode
Wiring method for common			32 points/common (1-wire, terminal block type)						
Number of occupied stations			32-point assignment/station (32 points used)						
Module power supply	Voltage		24VDC (ripple ratio: within 5%) (allowable voltage range: 20.4 to 26.4VDC)						
	Current		65mA or lower (at 24VDC and all points ON)						
Noise immunity			Noise voltage 500Vp-p, noise width 1μs, noise frequency 25 to 60Hz (DC type noise simulator condition)						
Withstand voltage			500VAC for 1 minute between all DC external terminals and ground						
Insulation resistance			10MΩ or higher between all DC external terminals and ground (500VDC insulation resistance tester)						
Protection degree			IP2X						
Weight			0.26kg						
External connection system	Communication part, module power supply part		7-point two-piece terminal block [Transmission circuit, module power supply, FG] M3×5.2 screw (tightening torque range: 0.59 to 0.88N•m) Applicable solderless terminal: 2 or less						
	I/O power supply part, I/O part		34-point direct-mount terminal block [I/O power supply, I/O signal] M3×5.2 screw (tightening torque range: 0.59 to 0.88N•m) Applicable solderless terminal: 2 or less						
Module mounting screw			M4 screw with plain washer finished round (tightening torque range: 0.78 to 1.08N•m) Mountable with a DIN rail in 6 orientations						
Applicable DIN rail			TH35-7.5Fe, TH35-7.5Al (compliant with IEC 60715 and JIS C 2812)						
Applicable solderless terminal			• RAV1.25-3 (compliant with JIS C 2805) [Applicable wire size: 0.3 to 1.25mm^2 (22 to 16 AWG) stranded wire] • V2-MS3, RAP2-3SL, TGV2-3N [Applicable wire size: 1.25 to 2.0mm^2 (16 to 14 AWG) stranded wire]						
Wire	Material		Copper						
	Temperature rating		75°C or more						
Accessory			User's manual						

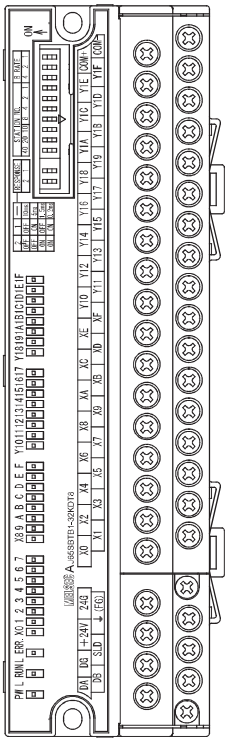

* For applicable solderless terminals connected to the terminal block, refer to the table above. Use applicable wires for the solderless terminals and fix them with an appropriate tightening torque. Use UL listed solderless terminals and, for crimping, use a tool recommended by their manufacturer.

6 - 35

External connection

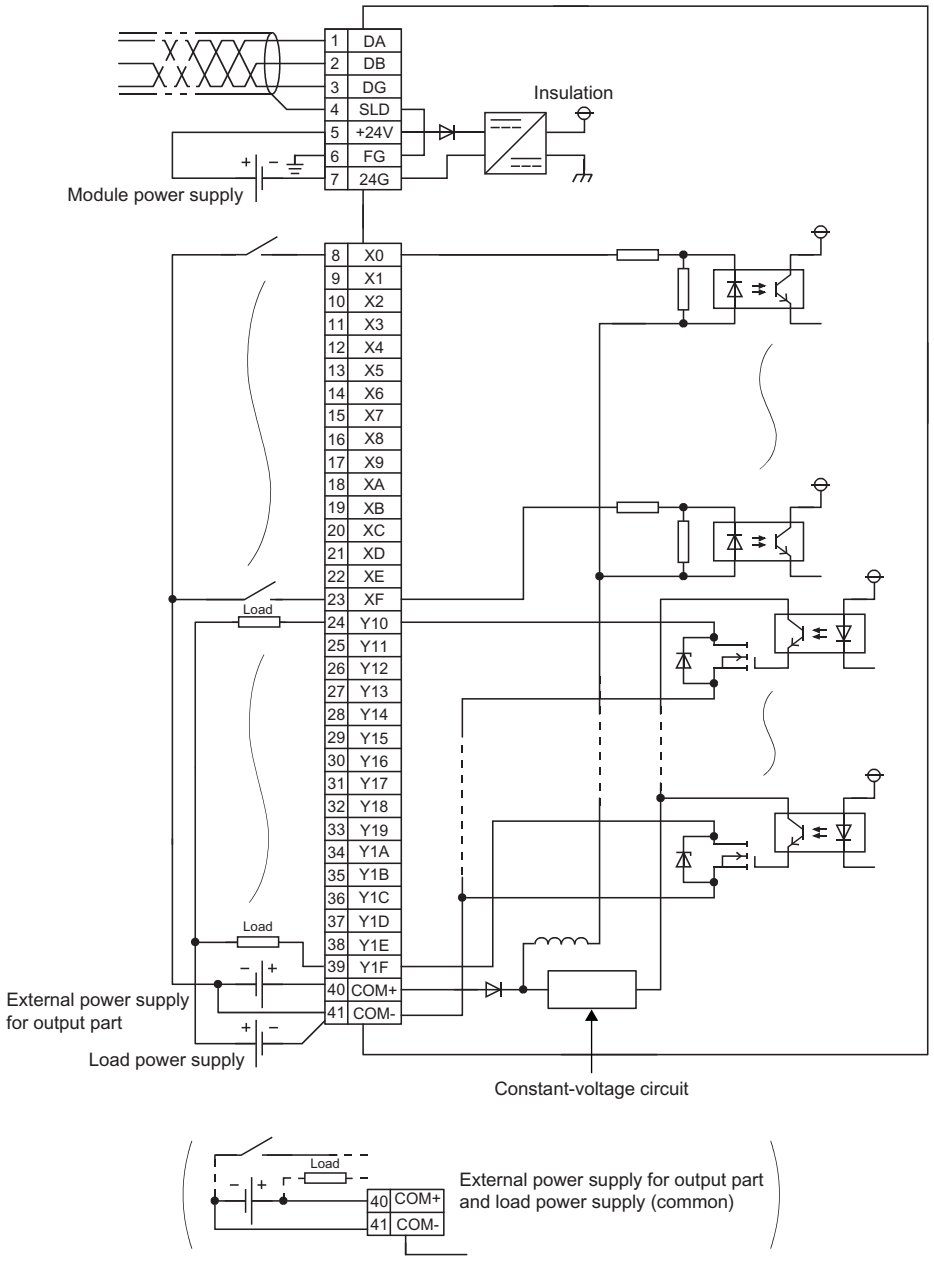

Terminal number	Signal name
TB1	DA
TB2	DB
TB3	DG
TB4	SLD
TB5	+24V
TB6	⏚ (FG)
TB7	24G
TB8	X0
TB9	X1
TB10	X2
TB11	X3
TB12	X4
TB13	X5
TB14	X6
TB15	X7
TB16	X8
TB17	X9
TB18	XA
TB19	XB
TB20	XC
TB21	XD
TB22	XE
TB23	XF
TB24	Y10
TB25	Y11
TB26	Y12
TB27	Y13
TB28	Y14
TB29	Y15
TB30	Y16
TB31	Y17
TB32	Y18
TB33	Y19
TB34	Y1A
TB35	Y1B
TB36	Y1C
TB37	Y1D
TB38	Y1E
TB39	Y1F
TB40	COM+
TB41	COM-

6 - 36

AbN
automation

6.1.19 AJ65SBTB1-32DTE1 combined module

Item \ Type		DC input transistor output combined module				
		AJ65SBTB1-32DTE1				Appearance
Input			Output			
Number of input points		16 points	Number of output points		16 points	
Isolation method		Photocoupler	Isolation method		Photocoupler	
Rated input voltage		24VDC (ripple ratio: within 5%)	Rated load voltage		24VDC (ripple ratio: within 5%)	
Rated input current		Approx. 7mA	Operating load voltage range		19.2 to 26.4VDC	
Operating voltage range		19.2 to 26.4VDC	Max. load current		0.5A/point, 3.6A/common	
Max. number of simultaneous input points		100%	Max. inrush current		1.0A, 10ms or less	
ON voltage/ON current		14VDC or higher/3.5mA or higher	Leakage current at OFF		0.1mA or lower	
OFF voltage/OFF current		6VDC or lower/1.7mA or lower	Max. voltage drop at ON		0.5VDC or lower (TYP.) 0.5A, 0.8VDC or lower (MAX.) 0.5A	
Input resistance		Approx. 3.3kΩ	Output type		Source type	
Response time	OFF→ON	1.5ms or less (at 24VDC)	Response time	OFF→ON	0.5ms or less	
	ON→OFF	1.5ms or less (at 24VDC)		ON→OFF	1.5ms or less (resistive load)	
			External power supply for output part	Voltage	24VDC (ripple ratio: within 5%) (allowable voltage range: 19.2 to 26.4VDC)	
				Current	10mA or lower (TYP. 24VDC/common), excluding external load current	
Input type		Negative common (source type)	Surge suppressor		Zener diode	
Wiring method for common		32 points/common (1-wire, terminal block type)				
Number of occupied stations		32-point assignment/station (32 points used)				
Module power supply	Voltage	24VDC (ripple ratio: within 5%) (allowable voltage range: 20.4 to 26.4VDC)				
	Current	50mA or lower (at 24VDC and all points ON)				
Noise immunity		Noise voltage 500Vp-p, noise width 1μs, noise frequency 25 to 60Hz (DC type noise simulator condition)				
Withstand voltage		500VAC for 1 minute between all DC external terminals and ground				
Insulation resistance		10MΩ or higher between all DC external terminals and ground (500VDC insulation resistance tester)				
Protection degree		IP2X				
Weight		0.26kg				
External connection system	Communication part, module power supply part	7-point two-piece terminal block [Transmission circuit, module power supply, FG] M3×5.2 screw (tightening torque range: 0.59 to 0.88N•m) Applicable solderless terminal: 2 or less				
	I/O power supply part, I/O part	34-point direct-mount terminal block [I/O power supply, I/O signal] M3×5.2 screw (tightening torque range: 0.59 to 0.88N•m) Applicable solderless terminal: 2 or less				
Module mounting screw		M4 screw with plain washer finished round (tightening torque range: 0.78 to 1.08N•m) Mountable with a DIN rail in 6 orientations				
Applicable DIN rail		TH35-7.5Fe, TH35-7.5Al (compliant with IEC 60715 and JIS C 2812)				
Applicable solderless terminal		• RAV1.25-3 (compliant with JIS C 2805) [Applicable wire size: 0.3 to 1.25mm^2 (22 to 16 AWG) stranded wire] • V2-MS3, RAP2-3SL, TGV2-3N [Applicable wire size: 1.25 to 2.0mm^2 (16 to 14 AWG) stranded wire]				
Wire	Material	Copper				
	Temperature rating	75°C or more				
Accessory		User's manual				

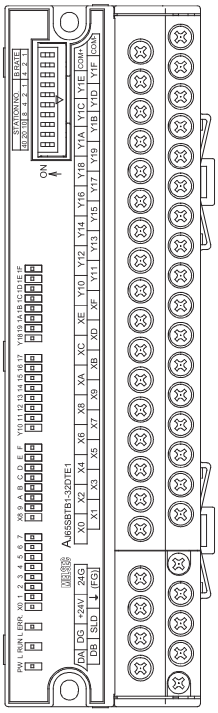

* For applicable solderless terminals connected to the terminal block, refer to the table above. Use applicable wires for the solderless terminals and fix them with an appropriate tightening torque. Use UL listed solderless terminals and, for crimping, use a tool recommended by their manufacturer.

6 - 37

External connection

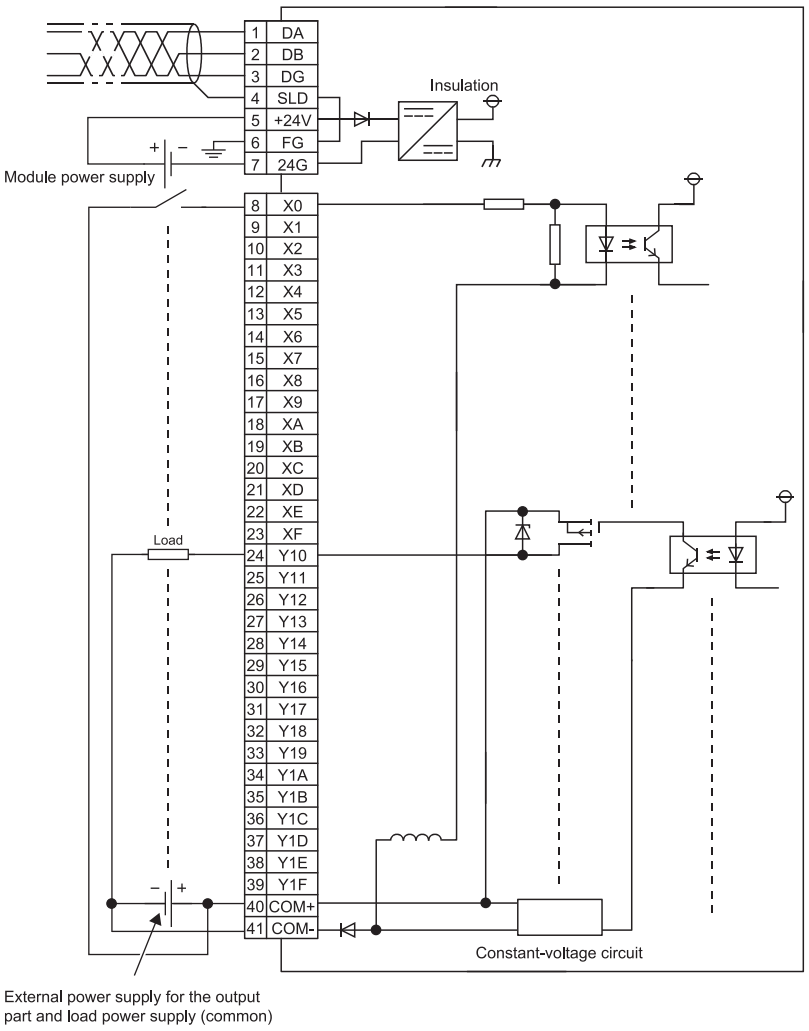

Terminal number	Signal name
TB1	DA
TB2	DB
TB3	DG
TB4	SLD
TB5	+24V
TB6	⏚ (FG)
TB7	24G
TB8	X0
TB9	X1
TB10	X2
TB11	X3
TB12	X4
TB13	X5
TB14	X6
TB15	X7
TB16	X8
TB17	X9
TB18	XA
TB19	XB
TB20	XC
TB21	XD
TB22	XE
TB23	XF
TB24	Y10
TB25	Y11
TB26	Y12
TB27	Y13
TB28	Y14
TB29	Y15
TB30	Y16
TB31	Y17
TB32	Y18
TB33	Y19
TB34	Y1A
TB35	Y1B
TB36	Y1C
TB37	Y1D
TB38	Y1E
TB39	Y1F
TB40	COM+
TB41	COM-

6 - 38

AbN
automation

6.1.20 AJ65DBTB1-32DT1 combined module

Item \ Type		DC input transistor output combined module			
		AJ65DBTB1-32DT1			Appearance
Input			Output		
Number of input points		16 points	Number of output points		16 points
Isolation method		Photocoupler	Isolation method		Photocoupler
Rated input voltage		24VDC (ripple ratio: within 5%)	Rated load voltage		12/24VDC (ripple ratio: within 5%)
Rated input current		Approx. 5mA	Operating load voltage range		10.2 to 31.2VDC
Operating voltage range		20.4 to 31.2VDC	Max. load current		0.5A/point, 4A/common (2A/terminal)
Max. number of simultaneous input points		100% (at 26.4VDC)	Max. inrush current		1.2A, 10ms or less
ON voltage/ON current		15VDC or higher/3mA or higher	Leakage current at OFF		0.1mA or lower
OFF voltage/OFF current		5VDC or lower/1.5mA or lower	Max. voltage drop at ON		0.3VDC or lower (TYP.) 0.5A, 0.6VDC or lower (MAX.) 0.5A
Input resistance		Approx. 4.7kΩ	Output type		Sink type
			Protection function		None
Response time	OFF→ON	10ms or less (at 24VDC)	Response time	OFF→ON	0.5ms or less
	ON→OFF	10ms or less (at 24VDC)		ON→OFF	1.5ms or less (resistive load)
			External power supply for output part	Voltage	12/24VDC (ripple ratio: within 5%) (allowable voltage range: 10.2 to 31.2VDC)
				Current	30mA or lower (at 24VDC and all points ON), excluding external load current
Input type		Positive common (sink type)	Surge suppressor		Zener diode
Wiring method for common		16 points/common (2 points) (1-wire, terminal block type)			
Number of occupied stations		32-point assignment/station (32 points used)			
Module power supply	Voltage	24VDC (ripple ratio: within 5%) (allowable voltage range: 20.4 to 26.4VDC)			
	Current	55mA or lower (at 24VDC and all points ON)			
Noise immunity		Noise voltage 500Vp-p, noise width 1μs, noise frequency 25 to 60Hz (DC type noise simulator condition)			
Withstand voltage		500VAC for 1 minute between all DC external terminals and ground			
Insulation resistance		10MΩ or higher between all DC external terminals and ground (500VDC insulation resistance tester)			
Protection degree		IP2X			
Weight		0.65kg			
External connection system		50-point terminal block [Transmission circuit, module power supply, FG, I/O power supply, I/O signal] M3.5×7 screw (tightening torque range: 0.68 to 0.92N•m) Applicable solderless terminal: 2 or less			
Module mounting screw		M4 screw with plain washer finished round (tightening torque range: 0.78 to 1.08N•m)			
Applicable solderless terminal		• R1.25-3.5 (compliant with JIS C 2805) [Applicable wire size: 0.3 to 1.25mm^2 (22 to 16 AWG) stranded wire] • RAV2-3.5 (compliant with JIS C 2805) [Applicable wire size: 1.25 to 2.0mm^2 (16 to 14 AWG) stranded wire]			
Wire	Material	Copper			
	Temperature rating	75°C or more			
Accessory		User's manual			
Part sold separately		A6DIN1C, A2CCOM-TB			

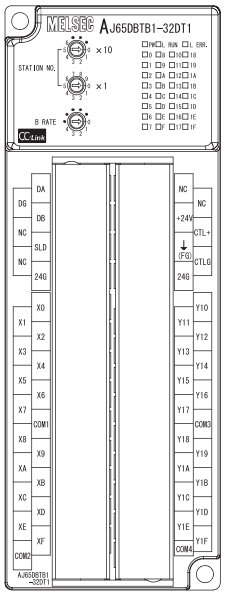

* For applicable solderless terminals connected to the terminal block, refer to the table above. Use applicable wires for the solderless terminals and fix them with an appropriate tightening torque. Use UL listed solderless terminals and, for crimping, use a tool recommended by their manufacturer.

6 - 39

External connection

Terminal number	Signal name
TB1	DA
TB2	DG
TB3	DB
TB4	Empty
TB5	SLD
TB6	Empty
TB7	24G
TB8	X0
TB9	X1
TB10	X2
TB11	X3
TB12	X4
TB13	X5
TB14	X6
TB15	X7
TB16	COM1
TB17	X8
TB18	X9
TB19	XA
TB20	XB
TB21	XC
TB22	XD
TB23	XE
TB24	XF
TB25	COM2

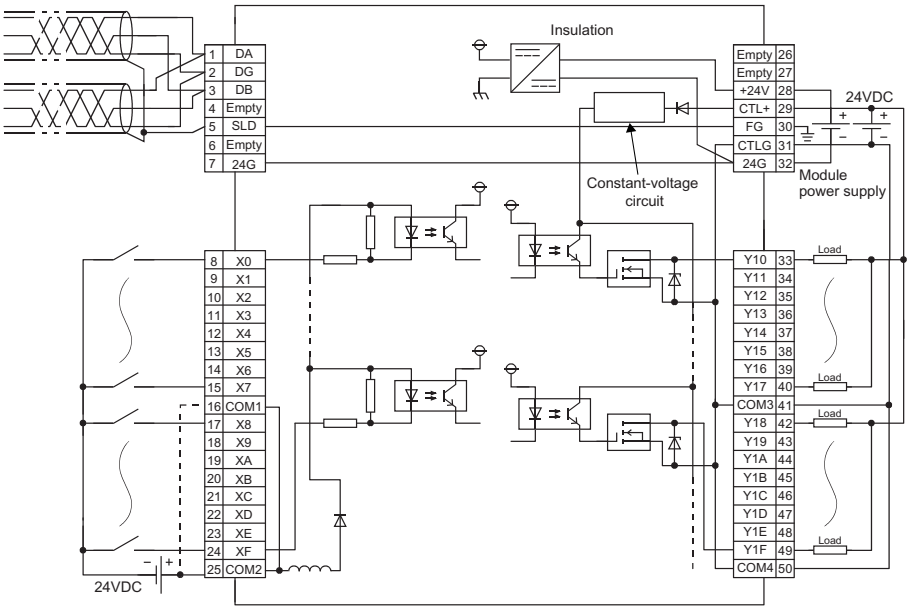

Terminal number	Signal name
TB26	Empty
TB27	Empty
TB28	+24V
TB29	CTL+
TB30	⏚ (FG)
TB31	CTLG
TB32	24G
TB33	Y10
TB34	Y11
TB35	Y12
TB36	Y13
TB37	Y14
TB38	Y15
TB39	Y16
TB40	Y17
TB41	COM3
TB42	Y18
TB43	Y19
TB44	Y1A
TB45	Y1B
TB46	Y1C
TB47	Y1D
TB48	Y1E
TB49	Y1F
TB50	COM4

AbN
automation

6.1.21 AJ65DBTB1-32DR combined module

Item \ Type	DC input contact output combined module					Appearance
	AJ65DBTB1-32DR					
Input			Output			
Number of input points	16 points		Number of output points		16 points	
Isolation method	Photocoupler		Isolation method		Photocoupler	
Rated input voltage	24VDC (ripple ratio: within 5%)		Rated load voltage		2A/point, 4A/common (2A/terminal) at 24VDC (resistive load) or 240VAC (cosϕ=1)	
Rated input current	Approx. 5mA		Min. switching load		5VDC, 1mA	
Operating voltage range	20.4 to 31.2VDC		Max. switching voltage		264VAC, 125VDC	
Max. number of simultaneous input points	100% (at 26.4VDC)		Life	Mechanical	20 million times or more	
ON voltage/ON current	15VDC or higher/3mA or higher		Life	Electrical	Rated switching voltage/current load: 100 thousand times or more 200VAC 1.5A, 240VAC 1A (cosϕ=0.7): 100 thousand times or more 200VAC 1A, 240VAC 0.5A (cosϕ=0.35): 100 thousand times or more 24VDC 1A, 100VDC 0.1A (L/R=7ms): 100 thousand times or more	
OFF voltage/OFF current	5VDC or lower/1.5mA or lower		Max. switching frequency		3600 times/hour	
Input resistance	Approx. 4.7kΩ		Response time	OFF→ON	10ms or less	
Response time OFF→ON	10ms or less (at 24VDC)			ON→OFF	12ms or less	
Response time ON→OFF	10ms or less (at 24VDC)		External power supply for output part (CTL+ and CTLG terminals)	Voltage	24VDC ±10% (ripple ratio: 4Vp-p or lower)	
				Current	90mA or lower (at 24VDC and all points ON)	
Wiring method for common	16 points/common (2 points) (1-wire, terminal block type)		Wiring method for common		8 points/common (1-wire, terminal block type)	
Input type	Positive/negative common shared type (sink/source shared type)		Surge suppressor		None	
Number of occupied stations	32-point assignment/station (32 points used)					
Module power supply Voltage	24VDC (ripple ratio: within 5%) (allowable voltage range: 20.4 to 26.4VDC)					
Module power supply Current	60mA or lower (at 24VDC and all points ON)					
Noise immunity	Noise voltage: 1500Vp-p (AC type), 500Vp-p (DC type), noise width 1μs, noise frequency 25 to 60Hz (noise simulator condition)					
Withstand voltage	1500VAC for 1 minute between all AC external terminals and ground 500VAC for 1 minute between all DC external terminals and ground					
Insulation resistance	10MΩ or higher between all AC external terminals and ground (500VDC insulation resistance tester) 10MΩ or higher between all DC external terminals and ground (500VDC insulation resistance tester)					
Protection degree	IP1X					
Weight	0.65kg					
External connection system	50-point terminal block [Transmission circuit, module power supply, FG, I/O power supply, I/O signal] M3.5×7 screw (tightening torque range: 0.68 to 0.92N•m) Applicable solderless terminal: 2 or less					
Module mounting screw	M4 screw with plain washer finished round (tightening torque range: 0.78 to 1.08N•m)					
Applicable solderless terminal	• R1.25-3.5 (compliant with JIS C 2805) [Applicable wire size: 0.3 to 1.25mm^2 (22 to 16 AWG) stranded wire] • RAV2-3.5 (compliant with JIS C 2805) [Applicable wire size: 1.25 to 2.0mm^2 (16 to 14 AWG) stranded wire]					
Wire Material	Copper					
Wire Temperature rating	75°C or more					
Accessory	User's manual					
Part sold separately	A6DIN1C, A2CCOM-TB					

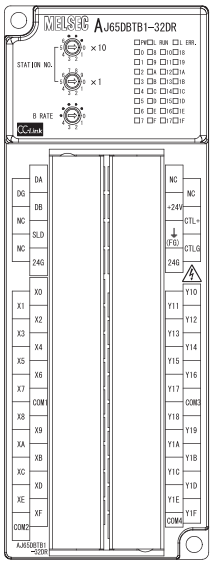

* For applicable solderless terminals connected to the terminal block, refer to the table above. Use applicable wires for the solderless terminals and fix them with an appropriate tightening torque. Use UL listed solderless terminals and, for crimping, use a tool recommended by their manufacturer.

6 - 41

External connection

Terminal number	Signal name
TB1	DA
TB2	DG
TB3	DB
TB4	Empty
TB5	SLD
TB6	Empty
TB7	24G
TB8	X0
TB9	X1
TB10	X2
TB11	X3
TB12	X4
TB13	X5
TB14	X6
TB15	X7
TB16	COM1
TB17	X8
TB18	X9
TB19	XA
TB20	XB
TB21	XC
TB22	XD
TB23	XE
TB24	XF
TB25	COM2

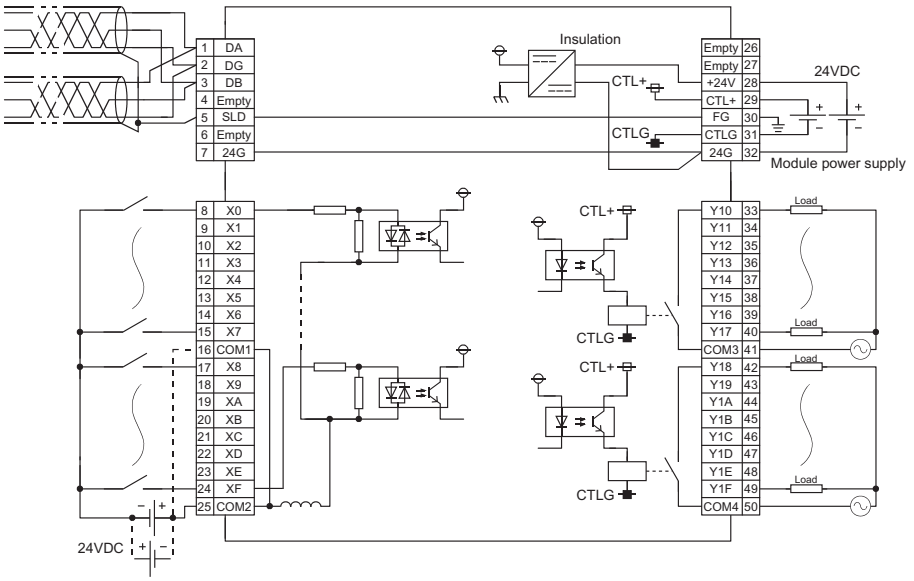

Terminal number	Signal name
TB26	Empty
TB27	Empty
TB28	+24V
TB29	CTL+
TB30	⏚ (FG)
TB31	CTLG
TB32	24G
TB33	Y10
TB34	Y11
TB35	Y12
TB36	Y13
TB37	Y14
TB38	Y15
TB39	Y16
TB40	Y17
TB41	COM3
TB42	Y18
TB43	Y19
TB44	Y1A
TB45	Y1B
TB46	Y1C
TB47	Y1D
TB48	Y1E
TB49	Y1F
TB50	COM4

6 - 42

AbN
automation

6.2 Spring Clamp Terminal Block Type Combined Module

6.2.1 AJ65VBTS32-16DT combined module

Item \ Type			DC input transistor output combined module			
			AJ65VBTS32-16DT			Appearance
Input				Output		
Number of input points			8 points	Number of output points		8 points
Isolation method			Photocoupler	Isolation method		Photocoupler
Rated input voltage			24VDC (ripple ratio: within 5%)	Rated load voltage		24VDC (ripple ratio: within 5%)
Rated input current			Approx. 5mA	Operating load voltage range		19.2 to 26.4VDC
Operating voltage range			19.2 to 26.4VDC	Max. load current		0.5A/point, 4A/common
Max. number of simultaneous input points			100%	Max. inrush current		1.0A, 10ms or less
ON voltage/ON current			14VDC or higher/3.5mA or higher	Leakage current at OFF		0.1mA or lower
OFF voltage/OFF current			6VDC or lower/1.7mA or lower	Max. voltage drop at ON		0.3VDC or lower (TYP.) 0.5A, 0.6VDC or lower (MAX.) 0.5A
Input resistance			Approx. 4.7kΩ			
Response time	OFF→ON		1.5ms or less (at 24VDC)	Output type		Sink type
	ON→OFF		1.5ms or less (at 24VDC)	Protection function		None
				Response time	OFF→ON	1ms or less
					ON→OFF	1ms or less (resistive load)
				External power supply for output part	Voltage	24VDC (ripple ratio: within 5%) (allowable voltage range: 19.2 to 26.4VDC)
					Current	15mA or lower (at 24VDC and all points ON), excluding external load current
Input type			Positive common (sink type)	Surge suppressor		Zener diode
Supply current for connected device			1.0A or lower/common			
Wiring method for common			16 points/common (input: 3-wire spring clamp terminal block type, output: 2-wire spring clamp terminal block type)			
Number of occupied stations			32-point assignment/station (16 points used)			
Module power supply	Voltage		24VDC (ripple ratio: within 5%) (allowable voltage range: 20.4 to 26.4VDC)			
	Current		40mA or lower (at 24VDC and all points ON)			
Noise immunity			Noise voltage 500Vp-p, noise width 1μs, noise frequency 25 to 60Hz (DC type noise simulator condition)			
Withstand voltage			500VAC for 1 minute between all DC external terminals and ground			
Insulation resistance			10MΩ or higher between all DC external terminals and ground (500VDC insulation resistance tester)			
Protection degree			IP1XB			
Weight			0.24kg			
External connection system	Communication part		One-touch connector for communication [Transmission circuit] 5-pin IDC plug is sold separately: A6CON-L5P <Optional> Online connector for communication: A6CON-LJ5P			
	Power supply part		One-touch connector for power supply and FG [Module power supply, FG] 5-pin IDC plug is sold separately: A6CON-PW5P, A6CON-PW5P-SOD <Optional> Online connector for power supply: A6CON-PWJ5P			
	I/O part		2-piece spring clamp terminal block [I/O power supply, I/O signals]			
Applicable DIN rail			TH35-7.5Fe, TH35-7.5Al (compliant with IEC 60715 and JIS C 2812)			
Applicable wire size	Connector for communication		Applicable cable: FANC-110SBH, FA-CBL200PSBH, CS-110			
	Connector for power supply and FG		0.66 to 0.98mm^2 (18 AWG) [ϕ2.2 to 3.0mm (A6CON-PW5P), ϕ2.0 to 2.3mm (A6CON-PW5P-SOD)] Wire diameter: 0.16mm or more Insulating coating material: PVC (heat-resistant)			
	Spring clamp terminal block for I/O		Stranded wire 0.08 to 1.5mm^2 (28 to 16 AWG) ＊1 Wire strip length: 8 to 11mm			
		Applicable solderless terminal	NF0.5 [Applicable wire size: 0.5mm^2] NF0.75 [Applicable wire size: 0.75mm^2] NF1 [Applicable wire size: 0.9 to 1.0mm^2] NF1.5 [Applicable wire size: 1.25 to 1.5mm^2] TGV TC1.25-9T [Applicable wire size: 0.3 to 1.65mm^2] TGWV TC1.25-T9 [Applicable wire size: 0.3 to 1.65mm^2]			
Accessory			User's manual, Holding fixtures for screw installation			

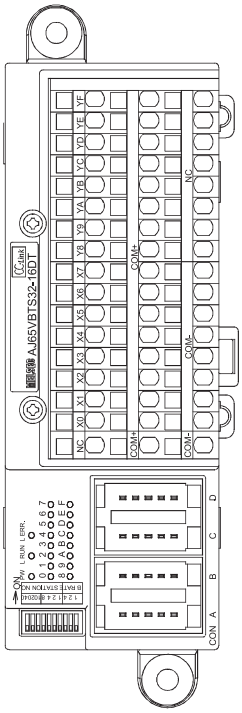

＊1: Insert one wire per terminal.

6 - 43

External connection

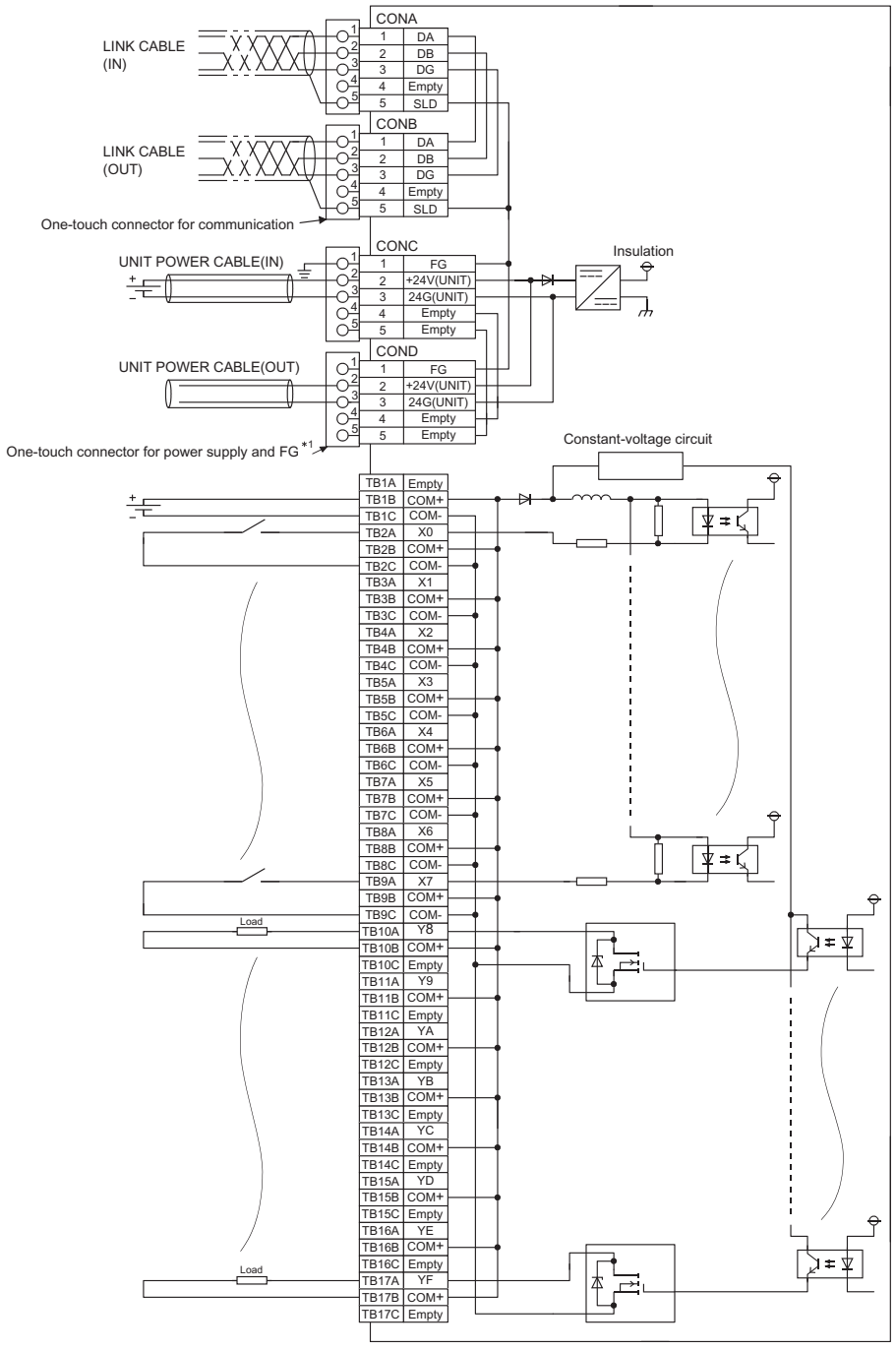

Pin number		Signal name
CON A, B	1	DA
	2	DB
	3	DG
	4	Empty
	5	SLD
CON C, D	1	⏚ (FG)
	2	+24V (UNIT)
	3	24G (UNIT)
	4	Empty
	5	Empty

Terminal block

Column A		Column B		Column C	
1	Empty	1	COM+	1	COM-
2	X0	2	COM+	2	COM-
3	X1	3	COM+	3	COM-
4	X2	4	COM+	4	COM-
5	X3	5	COM+	5	COM-
6	X4	6	COM+	6	COM-
7	X5	7	COM+	7	COM-
8	X6	8	COM+	8	COM-
9	X7	9	COM+	9	COM-
10	Y8	10	COM+	10	Empty
11	Y9	11	COM+	11	Empty
12	YA	12	COM+	12	Empty
13	YB	13	COM+	13	Empty
14	YC	14	COM+	14	Empty
15	YD	15	COM+	15	Empty
16	YE	16	COM+	16	Empty
17	YF	17	COM+	17	Empty

* 1: Attach an unwired connector plug to an unused one-touch connector for power supply and FG.

6 - 44

AbN
automation

External connection

<When using online connectors>

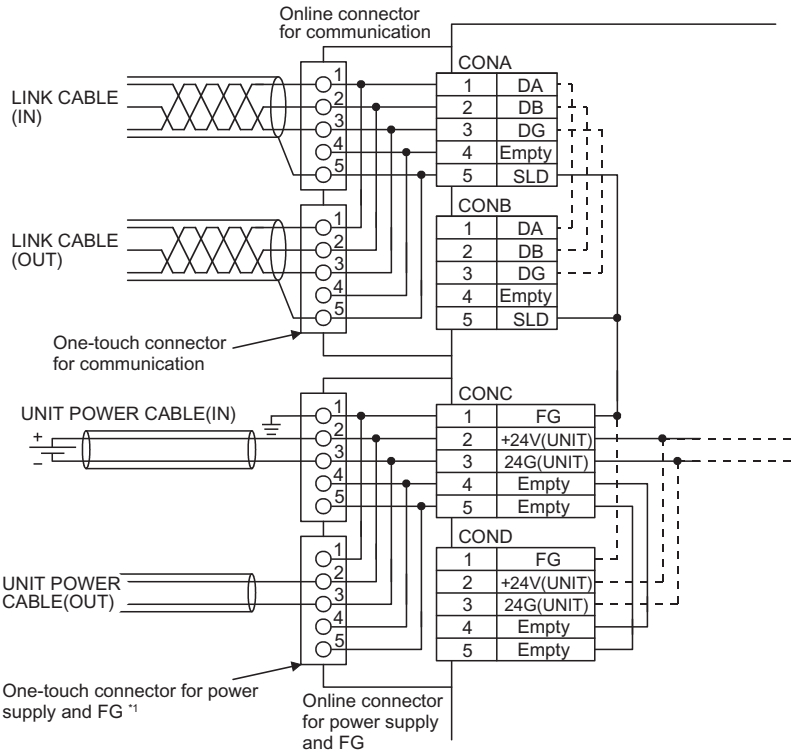

* 1: Attach an unwired connector plug to an unused one-touch connector for power supply and FG.

Pin layout

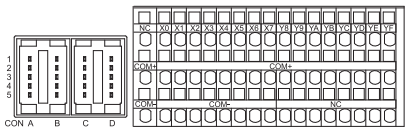

Viewed from the front of the module

6 - 45

6.2.2 AJ65VBTS32-32DT combined module

Item \ Type			DC input transistor output combined module			Appearance
			AJ65VBTS32-32DT			
Input			Output			
Number of input points		16 points	Number of output points		16 points	
Isolation method		Photocoupler	Isolation method		Photocoupler	
Rated input voltage		24VDC (ripple ratio: within 5%)	Rated load voltage		12/24VDC (ripple ratio: within 5%)	
Rated input current		Approx. 5mA	Operating load voltage range		10.2 to 26.4VDC	
Operating voltage range		19.2 to 26.4VDC	Max. load current		0.5A/point, 4A/common	
Max. number of simultaneous input points		100% or 75% (Refer to Section1.3.)	Max. inrush current		1.0A, 10ms or less	
ON voltage/ON current		14VDC or higher/3.5mA or higher	Leakage current at OFF		0.1mA or lower	
OFF voltage/OFF current		6VDC or lower/1.7mA or lower	Max. voltage drop at ON		0.3VDC or lower (TYP.) 0.5A, 0.6VDC or lower (MAX.) 0.5A	
Input resistance		Approx. 4.7kΩ				
Response time	OFF→ON	1.5ms or less (at 24VDC)	Output type		Sink type	
	ON→OFF	1.5ms or less (at 24VDC)	Protection function		None	
			Response time	OFF→ON	1ms or less	
				ON→OFF	1ms or less (resistive load)	
			External power supply for output part	Voltage	12/24VDC (ripple ratio: within 5%) (allowable voltage range: 10.2 to 26.4VDC)	
				Current	30mA or lower (at 24VDC and all points ON), excluding external load current	
Wiring method for common		16 points/common (3-wire, spring clamp terminal block type)	Wiring method for common		16 points/common (2-wire, spring clamp terminal block type)	
Input type		Positive common (sink type)	Surge suppressor		Zener diode	
Supply current for connected device		1.0A or lower/common				
Number of occupied stations		32-point assignment/station (32 points used)				
Module power supply	Voltage	24VDC (ripple ratio: within 5%) (allowable voltage range: 20.4 to 26.4VDC)				
	Current	50mA or lower (at 24VDC and all points ON)				
Noise immunity		Noise voltage 500Vp-p, noise width 1μs, noise frequency 25 to 60Hz (DC type noise simulator condition)				
Withstand voltage		500VAC for 1 minute between all DC external terminals and ground				
Insulation resistance		10MΩ or higher between all DC external terminals and ground (500VDC insulation resistance tester)				
Protection degree		IP1XB				
Weight		0.41kg				
External connection system	Communication part	One-touch connector for communication [Transmission circuit] 5-pin IDC plug is sold separately: A6CON-L5P <Optional> Online connector for communication: A6CON-LJ5P				
	Power supply part	One-touch connector for power supply and FG [Module power supply, FG] 5-pin IDC plug is sold separately: A6CON-PW5P, A6CON-PW5P-SOD <Optional> Online connector for power supply: A6CON-PWJ5P				
	I/O part	2-piece spring clamp terminal block [I/O power supply, I/O signals]				
Applicable DIN rail		TH35-7.5Fe, TH35-7.5Al (compliant with IEC 60715 and JIS C 2812)				
Applicable wire size	Connector for communication	Applicable cable: FANC-110SBH, FA-CBL200PSBH, CS-110				
	Connector for power supply and FG	0.66 to 0.98mm^2 (18 AWG) [ϕ2.2 to 3.0mm (A6CON-PW5P), ϕ2.0 to 2.3mm (A6CON-PW5P-SOD)] Wire diameter: 0.16mm or more Insulating coating material: PVC (heat-resistant)				
	Spring clamp terminal block for I/O	Stranded wire 0.08 to 1.5mm^2 (28 to 16 AWG) ＊1 Wire strip length: 8 to 11mm				
	Applicable solderless terminal	NF0.5 [Applicable wire size: 0.5mm^2] NF0.75 [Applicable wire size: 0.75mm^2] NF1 [Applicable wire size: 0.9 to 1.0mm^2] NF1.5 [Applicable wire size: 1.25 to 1.5mm^2] TGV TC1.25-9T [Applicable wire size: 0.3 to 1.65mm^2] TGWV TC1.25-T9 [Applicable wire size: 0.3 to 1.65mm^2]				
Accessory		User's manual, Holding fixtures for screw installation				

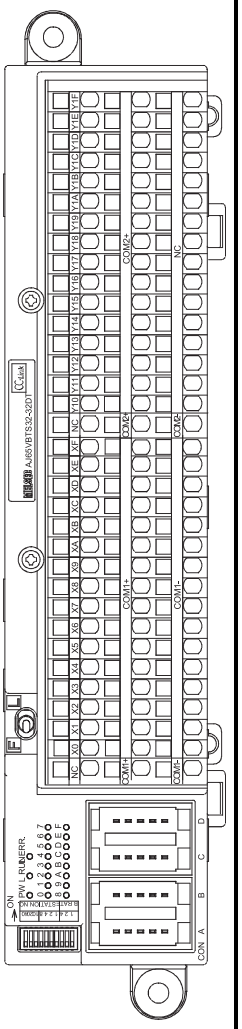

＊1: Insert one wire per terminal.

6 - 46

AbN
automation

External connection

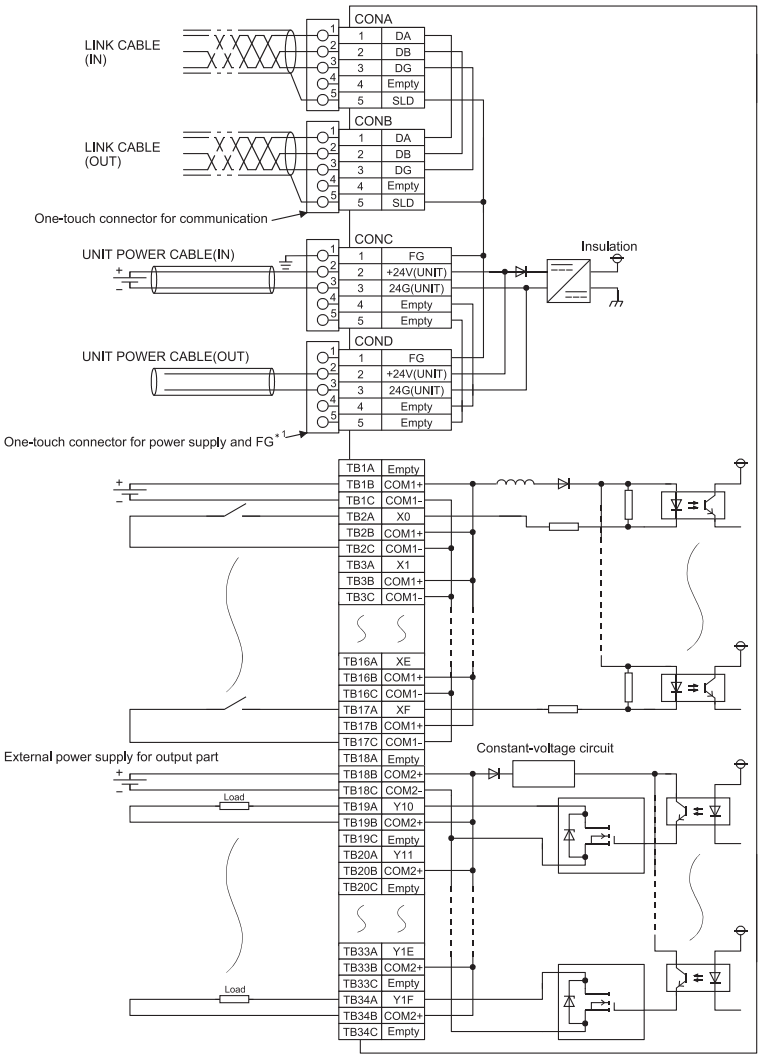

Pin number		Signal name
CON A, B	1	DA
	2	DB
	3	DG
	4	Empty
	5	SLD
CON C, D	1	⏚ (FG)
	2	+24V (UNIT)
	3	24G (UNIT)
	4	Empty
	5	Empty

Terminal block					
Column A		Column B		Column C	
1	Empty	1	COM1+	1	COM1-
2	X0	2	COM1+	2	COM1-
3	X1	3	COM1+	3	COM1-
4	X2	4	COM1+	4	COM1-
5	X3	5	COM1+	5	COM1-
6	X4	6	COM1+	6	COM1-
7	X5	7	COM1+	7	COM1-
8	X6	8	COM1+	8	COM1-
9	X7	9	COM1+	9	COM1-
10	X8	10	COM1+	10	COM1-
11	X9	11	COM1+	11	COM1-
12	XA	12	COM1+	12	COM1-
13	XB	13	COM1+	13	COM1-
14	XC	14	COM1+	14	COM1-
15	XD	15	COM1+	15	COM1-
16	XE	16	COM1+	16	COM1-
17	XF	17	COM1+	17	COM1-
18	Empty	18	COM2+	18	COM2-
19	Y10	19	COM2+	19	Empty
20	Y11	20	COM2+	20	Empty
21	Y12	21	COM2+	21	Empty
22	Y13	22	COM2+	22	Empty
23	Y14	23	COM2+	23	Empty
24	Y15	24	COM2+	24	Empty
25	Y16	25	COM2+	25	Empty
26	Y17	26	COM2+	26	Empty
27	Y18	27	COM2+	27	Empty
28	Y19	28	COM2+	28	Empty
29	Y1A	29	COM2+	29	Empty
30	Y1B	30	COM2+	30	Empty
31	Y1C	31	COM2+	31	Empty
32	Y1D	32	COM2+	32	Empty
33	Y1E	33	COM2+	33	Empty
34	Y1F	34	COM2+	34	Empty

* 1: Attach an unwired connector plug to an unused one-touch connector for power supply and FG.

6 - 47

External connection

<When using online connectors>

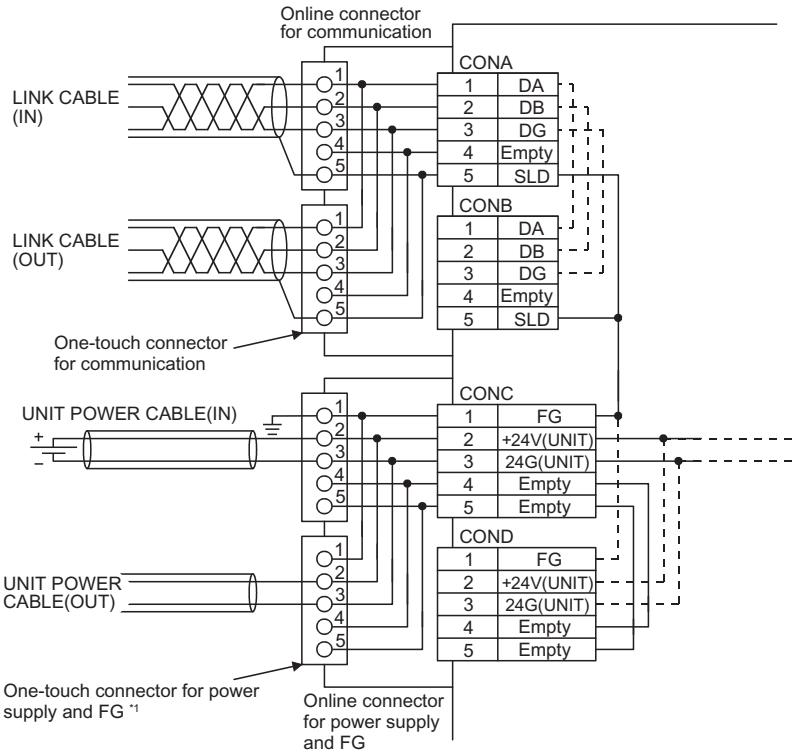

* 1: Attach an unwired connector plug to an unused one-touch connector for power supply and FG.

Pin layout

Viewed from the front of the module

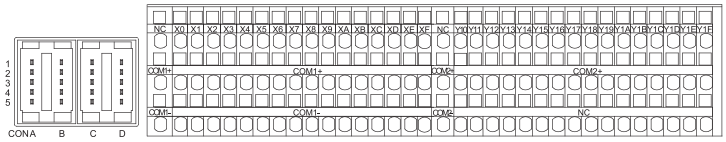

6 - 48

AbN
automation

6.3 Sensor Connector (e-CON) Type Combined Module

6.3.1 AJ65VBTCE32-16DT combined module

Item \ Type			DC input transistor output combined module: AJ65VBTCE32-16DT				Appearance
Input				Output			
Number of input points			8 points	Number of output points		8 points	
Isolation method			Photocoupler	Isolation method		Photocoupler	
Rated input voltage			24VDC (ripple ratio: within 5%)	Rated load voltage		24VDC (ripple ratio: within 5%)	
Rated input current			Approx. 5mA	Operating load voltage range		19.2 to 26.4VDC	
Operating voltage range			19.2 to 26.4VDC	Max. load current		0.1A/point, 0.8A/common	
Max. number of simultaneous input points			100%	Max. inrush current		0.7A, 10ms or less	
ON voltage/ON current			14VDC or higher/3.5mA or higher	Leakage current at OFF		0.1mA or lower	
OFF voltage/OFF current			6VDC or lower/1.7mA or lower	Max. voltage drop at ON		0.1VDC or lower (TYP.) 0.1A, 0.2VDC or lower (MAX.) 0.1A	
Input resistance			Approx. 4.7kΩ				
Response time	OFF→ON		1.5ms or less (at 24VDC)	Output type		Sink type	
	ON→OFF		1.5ms or less (at 24VDC)	Protection function		Overload protection, overvoltage protection, overheat protection	
				Response time	OFF→ON	1ms or less	
					ON→OFF	1ms or less (resistive load)	
				External power supply for output part	Voltage	24VDC (ripple ratio: within 5%) (allowable voltage range: 19.2 to 26.4VDC)	
					Current	5mA or lower (at 24VDC and all points ON), excluding external load current	
Input type			Positive common (sink type)	Surge suppressor		Zener diode	
Supply current for connected device			1.0A or lower/common				
Wiring method for common			16 points/common (input: 3-wire sensor connector (e-CON) type, output: 2-wire sensor connector (e-CON) type)				
Number of occupied stations			32-point assignment/station (16 points used)				
Module power supply	Voltage		24VDC (ripple ratio: within 5%) (allowable voltage range: 20.4 to 26.4VDC)				
	Current		40mA or lower (at 24VDC and all points ON)				
Noise immunity			Noise voltage 500Vp-p, noise width 1μs, noise frequency 25 to 60Hz (DC type noise simulator condition)				
Withstand voltage			500VAC for 1 minute between all DC external terminals and ground				
Insulation resistance			10MΩ or higher between all DC external terminals and ground (500VDC insulation resistance tester)				
Protection degree			IP1XB				
Weight			0.11kg				
External connection system	Communication part		One-touch connector for communication [Transmission circuit] 5-pin IDC plug is sold separately: A6CON-L5P <Optional> Online connector for communication: A6CON-LJ5P				
	Power supply part		One-touch connector for power supply and FG [Module power supply, I/O power supply, FG] 5-pin IDC plug is sold separately: A6CON-PW5P, A6CON-PW5P-SOD <Optional> Online connector for power supply: A6CON-PWJ5P				
	I/O part		Sensor connector (e-CON) [I/O signals] 4-pin IDC plug is sold separately. ＊1				
Applicable DIN rail			TH35-7.5Fe, TH35-7.5Al (compliant with IEC 60715 and JIS C 2812)				
Applicable wire size	Connector for communication		Applicable cable: FANC-110SBH, FA-CBL200PSBH, CS-110				
	Connector for power supply and FG		0.66 to 0.98mm^2 (18 AWG) [ϕ2.2 to 3.0mm (A6CON-PW5P), ϕ2.0 to 2.3mm (A6CON-PW5P-SOD)] Wire diameter: 0.16mm or more Insulating coating material: PVC (heat-resistant)				
	Connector for I/O		Sensor connector (e-CON). Applicable connector plugs are sold separately. ＊1 (applicable wire size: 0.08 to 0.5mm^2, depending on the connector plug)				
Accessory			User's manual, Holding fixtures for screw installation				

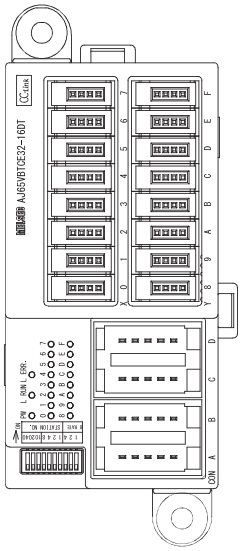

＊1: Refer to Section 1.6.2 for details.

6 - 49

External connection

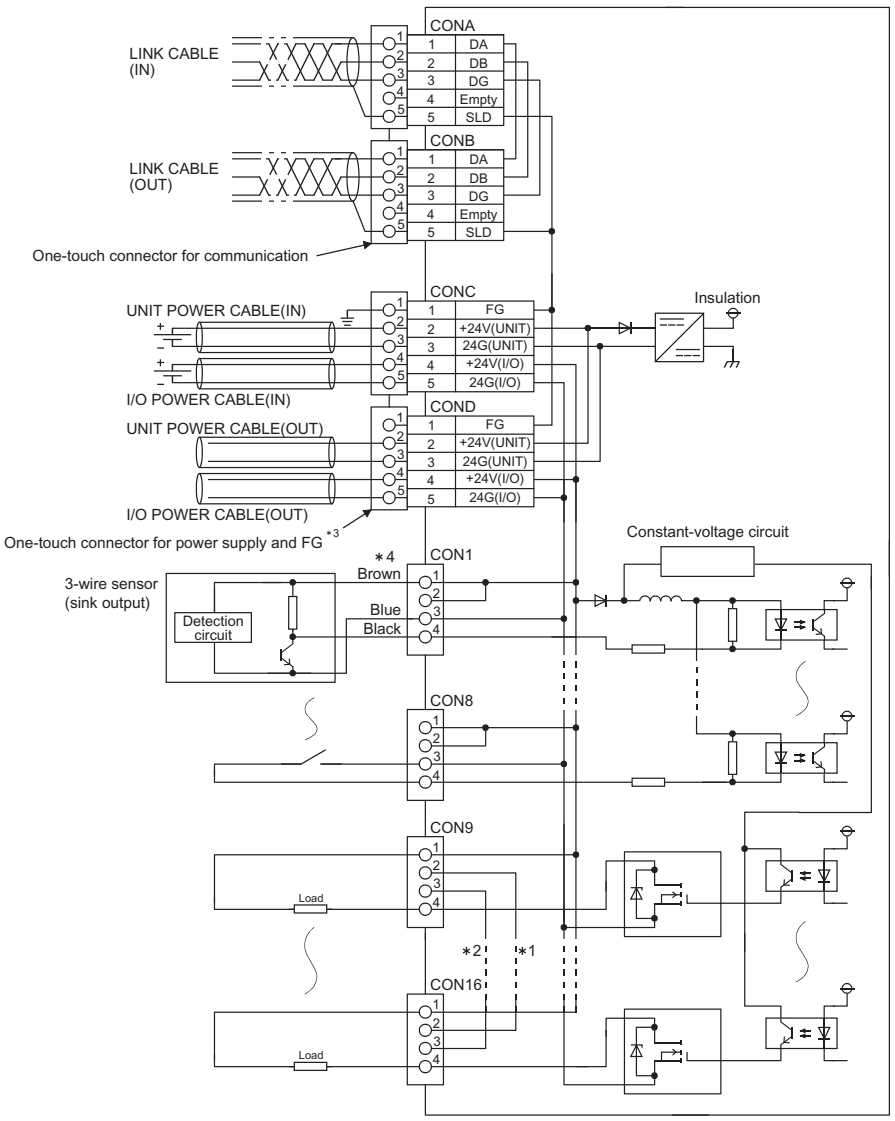

Pin number		Signal name
CON A,B	1	DA
	2	DB
	3	DG
	4	Empty
	5	SLD
CON C,D	1	⏚ (FG)
	2	+24V (UNIT)
	3	24G (UNIT)
	4	+24V(I/O)
	5	24G(I/O)

Pin number		Signal name	Pin number		Signal name
CON 1 (X0)	1	+24V	CON 9 (Y8)	1	+24V
	2	+V		2	Empty ＊1
	3	24G		3	Empty ＊2
	4	X0		4	Y8
CON 2 (X1)	1	+24V	CON 10 (Y9)	1	+24V
	2	+V		2	Empty ＊1
	3	24G		3	Empty ＊2
	4	X1		4	Y9
CON 3 (X2)	1	+24V	CON 11 (YA)	1	+24V
	2	+V		2	Empty ＊1
	3	24G		3	Empty ＊2
	4	X2		4	YA
CON 4 (X3)	1	+24V	CON 12 (YB)	1	+24V
	2	+V		2	Empty ＊1
	3	24G		3	Empty ＊2
	4	X3		4	YB
CON 5 (X4)	1	+24V	CON 13 (YC)	1	+24V
	2	+V		2	Empty ＊1
	3	24G		3	Empty ＊2
	4	X4		4	YC
CON 6 (X5)	1	+24V	CON 14 (YD)	1	+24V
	2	+V		2	Empty ＊1
	3	24G		3	Empty ＊2
	4	X5		4	YD
CON 7 (X6)	1	+24V	CON 15 (YE)	1	+24V
	2	+V		2	Empty ＊1
	3	24G		3	Empty ＊2
	4	X6		4	YE
CON 8 (X7)	1	+24V	CON 16 (YF)	1	+24V
	2	+V		2	Empty ＊1
	3	24G		3	Empty ＊2
	4	X7		4	YF

＊1: Since all No.2 pins of CON9 to CON16 are connected inside the module, they cannot be used.
＊2: Since all No.3 pins of CON9 to CON16 are connected inside the module, they cannot be used.
＊3: Attach an unwired connector plug to an unused one-touch connector for power supply and FG.
＊4: Wiring the sensor connector (e-CON) incorrectly may cause malfunction or failure due to short circuit of the power supply.

6 - 50

AbN
automation

External connection

<When using online connectors>

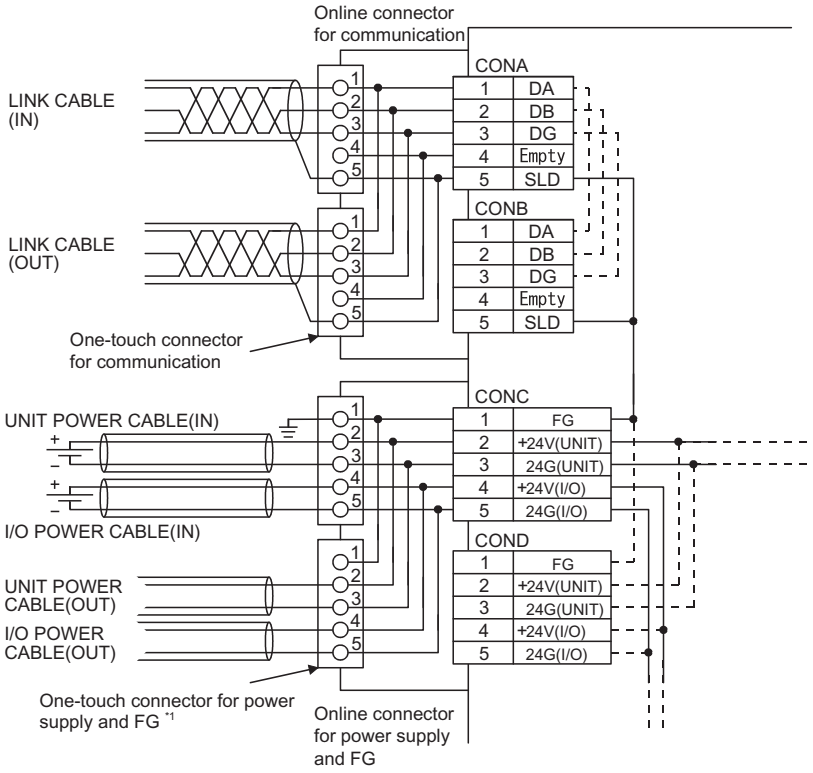

* 1: Attach an unwired connector plug to an unused one-touch connector for power supply and FG.

Pin layout

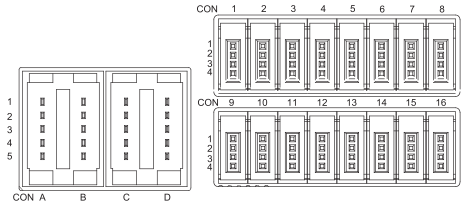

Viewed from the front of the module

6 - 51

6.3.2 AJ65VBTCE3-16DTE combined module

Item \ Type		DC input transistor output combined module				Appearance
		AJ65VBTCE3-16DTE				
Input			Output			
Number of input points		8 points	Number of output points		8 points	
Isolation method		Photocoupler	Isolation method		Photocoupler	
Rated input voltage		24VDC (ripple ratio: within 5%)	Rated load voltage		24VDC (ripple ratio: within 5%)	
Rated input current		Approx. 5mA	Operating load voltage range		19.2 to 26.4VDC	
Operating voltage range		19.2 to 26.4VDC	Max. load current		0.1A/point, 0.8A/common	
Max. number of simultaneous input points		100%	Max. inrush current		0.7A, 10ms or less	
ON voltage/ON current		14VDC or higher/3.5mA or higher	Leakage current at OFF		0.1mA or lower	
OFF voltage/OFF current		6VDC or lower/1.7mA or lower	Max. voltage drop at ON		0.1VDC or lower (TYP.) 0.1A, 0.2VDC or lower (MAX.) 0.1A	
Input resistance		Approx. 4.7kΩ				
Response time	OFF→ON	1.5ms or less (at 24VDC)	Output type		Source type	
	ON→OFF	1.5ms or less (at 24VDC)	Protection function		Overload protection, overheat protection	
			Response time	OFF→ON	1ms or less	
				ON→OFF	1ms or less (resistive load)	
			External power supply for output part	Voltage	24VDC (ripple ratio: within 5%) (allowable voltage range: 19.2 to 26.4VDC)	
				Current	7mA or lower (at 24VDC and all points ON), excluding external load current	
Input type		Negative common (source type)	Surge suppressor		Zener diode	
Supply current for connected device		1.0A or lower/common				
Wiring method for common		16 points/common (input: 3-wire sensor connector (e-CON) type, output: 3-wire sensor connector (e-CON) type)				
Number of occupied stations		32-point assignment/station (16 points used)				
Module power supply	Voltage	24VDC (ripple ratio: within 5%) (allowable voltage range: 20.4 to 26.4VDC)				
	Current	40mA or lower (at 24VDC and all points ON)				
Noise immunity		Noise voltage 500Vp-p, noise width 1μs, noise frequency 25 to 60Hz (DC type noise simulator condition)				
Withstand voltage		500VAC for 1 minute between all DC external terminals and ground				
Insulation resistance		10MΩ or higher between all DC external terminals and ground (500VDC insulation resistance tester)				
Protection degree		IP1XB				
Weight		0.11kg				
External connection system	Communication part	One-touch connector for communication [Transmission circuit] 5-pin IDC plug is sold separately: A6CON-L5P <Optional> Online connector for communication: A6CON-LJ5P				
	Power supply part	One-touch connector for power supply and FG [Module power supply, I/O power supply, FG] 5-pin IDC plug is sold separately: A6CON-PW5P, A6CON-PW5P-SOD <Optional> Online connector for power supply: A6CON-PWJ5P				
	I/O part	Sensor connector (e-CON) [I/O signals] 4-pin IDC plug is sold separately. ＊1				
Applicable DIN rail		TH35-7.5Fe, TH35-7.5Al (compliant with IEC 60715 and JIS C 2812)				
Applicable wire size	Connector for communication	Applicable cable: FANC-110SBH, FA-CBL200PSBH, CS-110				
	Connector for power supply and FG	0.66 to 0.98mm^2 (18 AWG) [ϕ2.2 to 3.0mm (A6CON-PW5P), ϕ2.0 to 2.3mm (A6CON-PW5P-SOD)] Wire diameter: 0.16mm or more Insulating coating material: PVC (heat-resistant)				
	Connector for I/O	Sensor connector (e-CON). Applicable connector plugs are sold separately. ＊1 (applicable wire size: 0.08 to 0.5mm^2, depending on the connector plug)				
Accessory		User's manual, Holding fixtures for screw installation				

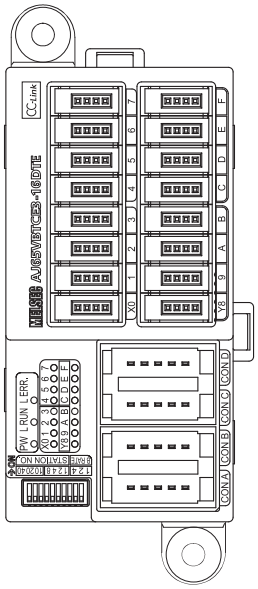

＊1: Refer to Section 1.6.2 for details.

6 - 52

AbN
automation

External connection

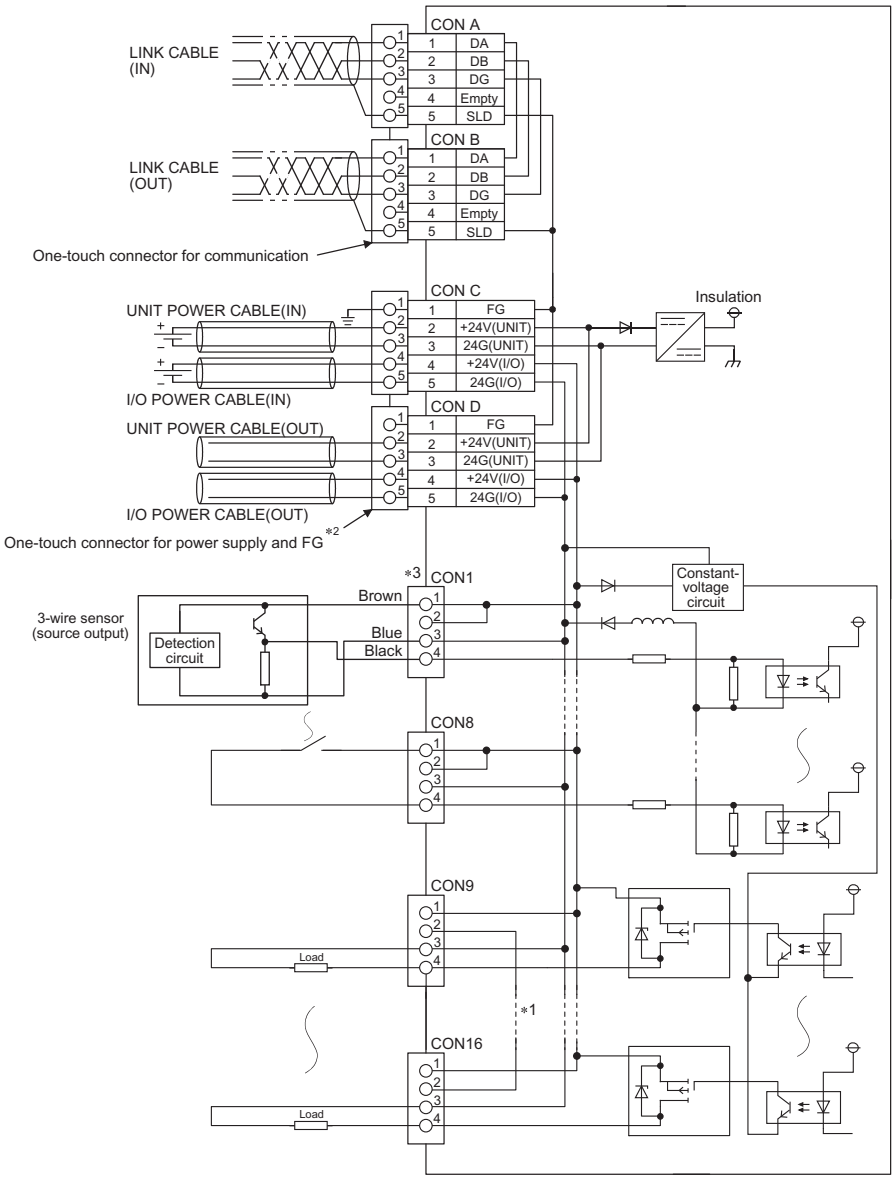

Pin number		Signal name
CON A,B	1	DA
	2	DB
	3	DG
	4	Empty
	5	SLD
CON C,D	1	⏚ (FG)
	2	+24V (UNIT)
	3	24G (UNIT)
	4	+24V(I/O)
	5	24G(I/O)

Pin number		Signal name	Pin number		Signal name
CON 1 (X0)	1	+24V	CON 9 (Y8)	1	+24V
	2	+V		2	Empty ＊1
	3	24G		3	24G
	4	X0		4	Y8
CON 2 (X1)	1	+24V	CON 10 (Y9)	1	+24V
	2	+V		2	Empty ＊1
	3	24G		3	24G
	4	X1		4	Y9
CON 3 (X2)	1	+24V	CON 11 (YA)	1	+24V
	2	+V		2	Empty ＊1
	3	24G		3	24G
	4	X2		4	YA
CON 4 (X3)	1	+24V	CON 12 (YB)	1	+24V
	2	+V		2	Empty ＊1
	3	24G		3	24G
	4	X3		4	YB
CON 5 (X4)	1	+24V	CON 13 (YC)	1	+24V
	2	+V		2	Empty ＊1
	3	24G		3	24G
	4	X4		4	YC
CON 6 (X5)	1	+24V	CON 14 (YD)	1	+24V
	2	+V		2	Empty ＊1
	3	24G		3	24G
	4	X5		4	YD
CON 7 (X6)	1	+24V	CON 15 (YE)	1	+24V
	2	+V		2	Empty ＊1
	3	24G		3	24G
	4	X6		4	YE
CON 8 (X7)	1	+24V	CON 16 (YF)	1	+24V
	2	+V		2	Empty ＊1
	3	24G		3	24G
	4	X7		4	YF

＊1: Since all No.2 pins of CON9 to CON16 are connected inside the module, they cannot be used.
＊2: Attach an unwired connector plug to an unused one-touch connector for power supply and FG.
＊3: Wiring the sensor connector (e-CON) incorrectly may cause malfunction or failure due to short circuit of the power supply.

6 - 53

External connection

<When using online connectors>

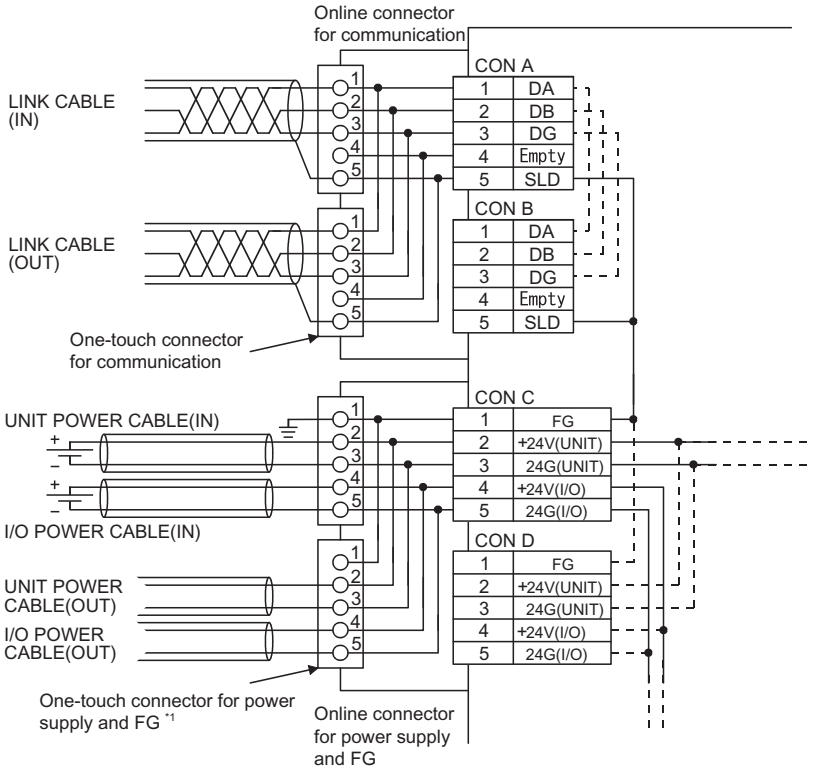

* 1: Attach an unwired connector plug to an unused one-touch connector for power supply and FG.

Pin layout

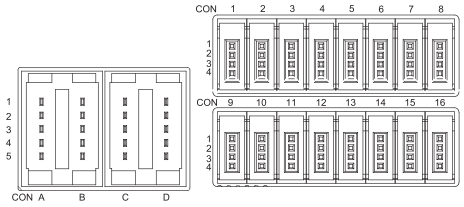

Viewed from the front of the module

6 - 54

AbN
automation

6.3.3 AJ65VBTCE32-32DT combined module

Item \ Type		DC input transistor output combined module			
		AJ65VBTCE32-32DT			Appearance
Input			Output		
Number of input points		16 points	Number of output points		16 points
Isolation method		Photocoupler	Isolation method		Photocoupler
Rated input voltage		24VDC (ripple ratio: within 5%)	Rated load voltage		24VDC (ripple ratio: within 5%)
Rated input current		Approx. 5mA	Operating load voltage range		19.2 to 26.4VDC
Operating voltage range		19.2 to 26.4VDC	Max. load current		0.1A/point, 1.6A/common
Max. number of simultaneous input points		100%	Max. inrush current		0.7A, 10ms or less
ON voltage/ON current		14VDC or higher/3.5mA or higher	Leakage current at OFF		0.1mA or lower
OFF voltage/OFF current		6VDC or lower/1.7mA or lower	Max. voltage drop at ON		0.1VDC or lower (TYP.) 0.1A, 0.2VDC or lower (MAX.) 0.1A
Input resistance		Approx. 4.7kΩ			
Response time	OFF→ON	1.5ms or less (at 24VDC)	Output type		Sink type
	ON→OFF	1.5ms or less (at 24VDC)	Protection function		Overload protection, overvoltage protection, overheat protection
			Response time	OFF→ON	1ms or less
				ON→OFF	1ms or less (resistive load)
			External power supply for output part	Voltage	24VDC (ripple ratio: within 5%) (allowable voltage range: 19.2 to 26.4VDC)
				Current	10mA or lower (at 24VDC and all points ON), excluding external load current
Input type		Positive common (sink type)	Surge suppressor		Zener diode
Supply current for connected device		1.0A or lower/common			
Wiring method for common		32 points/common (input: 3-wire sensor connector (e-CON) type, output: 2-wire sensor connector (e-CON) type)			
Number of occupied stations		32-point assignment/station (32 points used)			
Module power supply	Voltage	24VDC (ripple ratio: within 5%) (allowable voltage range: 20.4 to 26.4VDC)			
	Current	45mA or lower (at 24VDC and all points ON)			
Noise immunity		Noise voltage 500Vp-p, noise width 1μs, noise frequency 25 to 60Hz (DC type noise simulator condition)			
Withstand voltage		500VAC for 1 minute between all DC external terminals and ground			
Insulation resistance		10MΩ or higher between all DC external terminals and ground (500VDC insulation resistance tester)			
Protection degree		IP1XB			
Weight		0.16kg			
External connection system	Communication part	One-touch connector for communication [Transmission circuit] 5-pin IDC plug is sold separately: A6CON-L5P <Optional> Online connector for communication: A6CON-LJ5P			
	Power supply part	One-touch connector for power supply and FG [Module power supply, I/O power supply, FG] 5-pin IDC plug is sold separately: A6CON-PW5P, A6CON-PW5P-SOD <Optional> Online connector for power supply: A6CON-PWJ5P			
	I/O part	Sensor connector (e-CON) [I/O signals] 4-pin IDC plug is sold separately. ＊1			
Applicable DIN rail		TH35-7.5Fe, TH35-7.5Al (compliant with IEC 60715 and JIS C 2812)			
Applicable wire size	Connector for communication	Applicable cable: FANC-110SBH, FA-CBL200PSBH, CS-110			
	Connector for power supply and FG	0.66 to 0.98mm^2 (18 AWG) [ϕ2.2 to 3.0mm (A6CON-PW5P), ϕ2.0 to 2.3mm (A6CON-PW5P-SOD)] Wire diameter: 0.16mm or more Insulating coating material: PVC (heat-resistant)			
	Connector for I/O	Sensor connector (e-CON). Applicable connector plugs are sold separately. ＊1 (applicable wire size: 0.08 to 0.5mm^2, depending on the connector plug)			
Accessory		User's manual, Holding fixtures for screw installation			

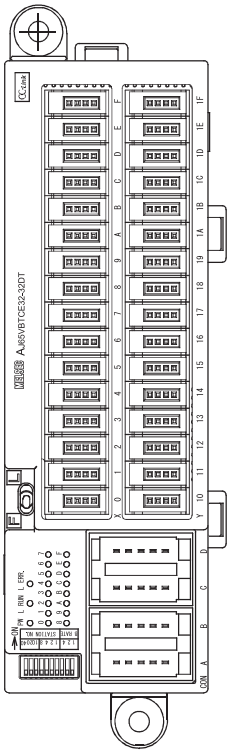

＊1: Refer to Section 1.6.2 for details.

6 - 55

External connection

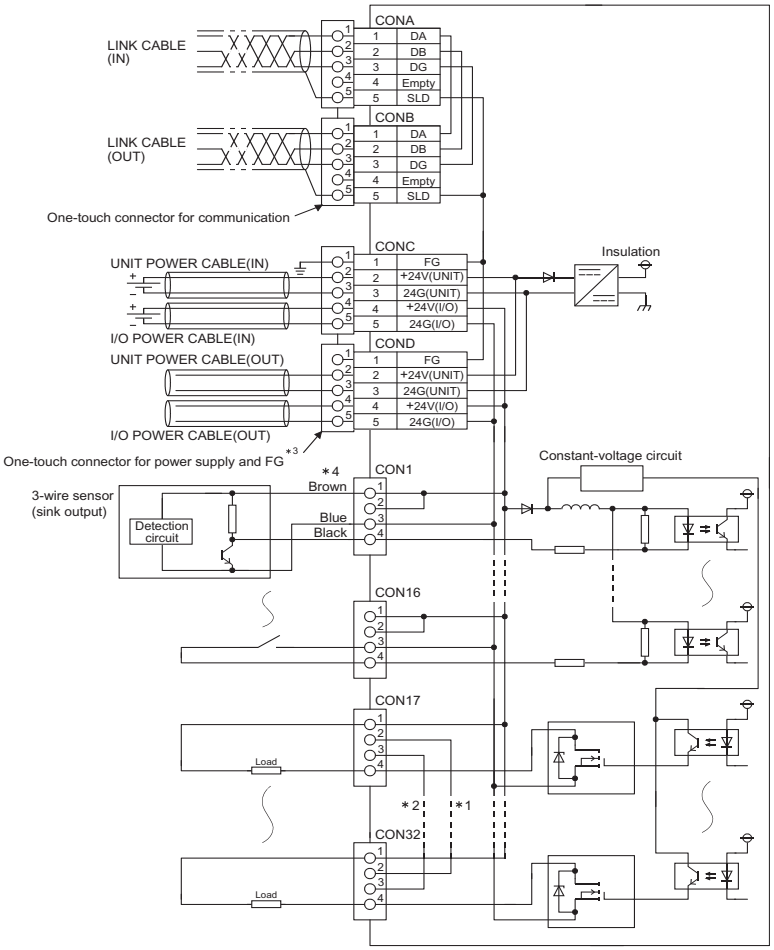

Pin number		Signal name	Pin number		Signal name
CON A,B	1	DA	CON C,D	1	⏚ (FG)
	2	DB		2	+24V (UNIT)
	3	DG		3	24G (UNIT)
	4	Empty		4	+24V(I/O)
	5	SLD		5	24G(I/O)

Pin number		Signal name	Pin number		Signal name
CON1 (X0)	1	+24V	CON17 (Y10)	1	+24V
	2	+V		2	Empty ＊1
	3	24G		3	Empty ＊2
	4	X0		4	Y10
CON2 (X1)	1	+24V	CON18 (Y11)	1	+24V
	2	+V		2	Empty ＊1
	3	24G		3	Empty ＊2
	4	X1		4	Y11
CON3 (X2)	1	+24V	CON19 (Y12)	1	+24V
	2	+V		2	Empty ＊1
	3	24G		3	Empty ＊2
	4	X2		4	Y12
CON4 (X3)	1	+24V	CON20 (Y13)	1	+24V
	2	+V		2	Empty ＊1
	3	24G		3	Empty ＊2
	4	X3		4	Y13
CON5 (X4)	1	+24V	CON21 (Y14)	1	+24V
	2	+V		2	Empty ＊1
	3	24G		3	Empty ＊2
	4	X4		4	Y14
CON6 (X5)	1	+24V	CON22 (Y15)	1	+24V
	2	+V		2	Empty ＊1
	3	24G		3	Empty ＊2
	4	X5		4	Y15
CON7 (X6)	1	+24V	CON23 (Y16)	1	+24V
	2	+V		2	Empty ＊1
	3	24G		3	Empty ＊2
	4	X6		4	Y16
CON8 (X7)	1	+24V	CON24 (Y17)	1	+24V
	2	+V		2	Empty ＊1
	3	24G		3	Empty ＊2
	4	X7		4	Y17
CON9 (X8)	1	+24V	CON25 (Y18)	1	+24V
	2	+V		2	Empty ＊1
	3	24G		3	Empty ＊2
	4	X8		4	Y18
CON10 (X9)	1	+24V	CON26 (Y19)	1	+24V
	2	+V		2	Empty ＊1
	3	24G		3	Empty ＊2
	4	X9		4	Y19
CON11 (XA)	1	+24V	CON27 (Y1A)	1	+24V
	2	+V		2	Empty ＊1
	3	24G		3	Empty ＊2
	4	XA		4	Y1A
CON12 (XB)	1	+24V	CON28 (Y1B)	1	+24V
	2	+V		2	Empty ＊1
	3	24G		3	Empty ＊2
	4	XB		4	Y1B
CON13 (XC)	1	+24V	CON29 (Y1C)	1	+24V
	2	+V		2	Empty ＊1
	3	24G		3	Empty ＊2
	4	XC		4	Y1C
CON14 (XD)	1	+24V	CON30 (Y1D)	1	+24V
	2	+V		2	Empty ＊1
	3	24G		3	Empty ＊2
	4	XD		4	Y1D
CON15 (XE)	1	+24V	CON31 (Y1E)	1	+24V
	2	+V		2	Empty ＊1
	3	24G		3	Empty ＊2
	4	XE		4	Y1E
CON16 (XF)	1	+24V	CON32 (Y1F)	1	+24V
	2	+V		2	Empty ＊1
	3	24G		3	Empty ＊2
	4	XF		4	Y1F

＊1: Since all No.2 pins of CON17 to CON32 are connected inside the module, they cannot be used.
＊2: Since all No.3 pins of CON17 to CON32 are connected inside the module, they cannot be used.
＊3: Attach an unwired connector plug to an unused one-touch connector for power supply and FG.
＊4: Wiring the sensor connector (e-CON) incorrectly may cause malfunction or failure due to short circuit of the power supply.

6 - 56

AbN
automation

External connection

<When using online connectors>

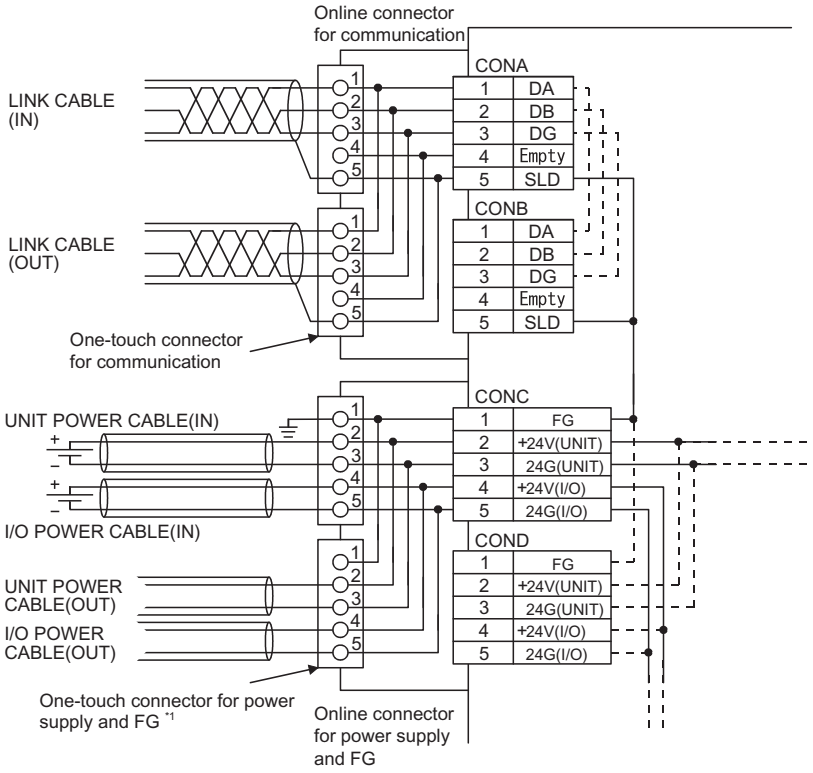

* 1: Attach an unwired connector plug to an unused one-touch connector for power supply and FG.

Pin layout

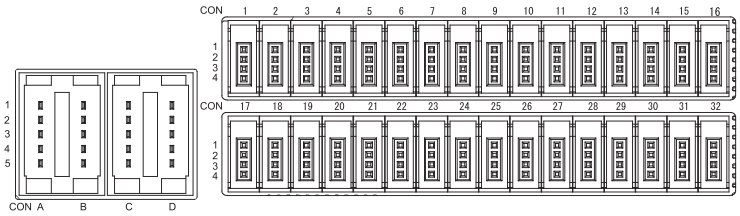

Viewed from the front of the module

6 - 57

6.3.4 AJ65VBTCE3-32DTE combined module

Item \ Type		DC input transistor output combined module			
		AJ65VBTCE3-32DTE			Appearance
Input			Output		
Number of input points		16 points	Number of output points		16 points
Isolation method		Photocoupler	Isolation method		Photocoupler
Rated input voltage		24VDC (ripple ratio: within 5%)	Rated load voltage		24VDC (ripple ratio: within 5%)
Rated input current		Approx. 5mA	Operating load voltage range		19.2 to 26.4VDC
Operating voltage range		19.2 to 26.4VDC	Max. load current		0.1A/point, 1.6A/common
Max. number of simultaneous input points		100%	Max. inrush current		0.7A, 10ms or less
ON voltage/ON current		14VDC or higher/3.5mA or higher	Leakage current at OFF		0.1mA or lower
OFF voltage/OFF current		6VDC or lower/1.7mA or lower	Max. voltage drop at ON		0.1VDC or lower (TYP.) 0.1A, 0.2VDC or lower (MAX.) 0.1A
Input resistance		Approx. 4.7kΩ			
Response time	OFF→ON	1.5ms or less (at 24VDC)	Output type		Source type
	ON→OFF	1.5ms or less (at 24VDC)	Protection function		Overload protection, overheat protection
			Response time	OFF→ON	1ms or less
				ON→OFF	1ms or less (resistive load)
			External power supply for output part	Voltage	24VDC (ripple ratio: within 5%) (allowable voltage range: 19.2 to 26.4VDC)
				Current	11mA or lower (at 24VDC and all points ON), excluding external load current
Input type		Negative common (source type)	Surge suppressor		Zener diode
Supply current for connected device		2.0A or lower/common			
Wiring method for common		32 points/common (input: 3-wire sensor connector (e-CON) type, output: 3-wire sensor connector (e-CON) type)			
Number of occupied stations		32-point assignment/station (32 points used)			
Module power supply	Voltage	24VDC (ripple ratio: within 5%) (allowable voltage range: 20.4 to 26.4VDC)			
	Current	45mA or lower (at 24VDC and all points ON)			
Noise immunity		Noise voltage 500Vp-p, noise width 1μs, noise frequency 25 to 60Hz (DC type noise simulator condition)			
Withstand voltage		500VAC for 1 minute between all DC external terminals and ground			
Insulation resistance		10MΩ or higher between all DC external terminals and ground (500VDC insulation resistance tester)			
Protection degree		IP1XB			
Weight		0.16kg			
External connection system	Communication part	One-touch connector for communication [Transmission circuit] 5-pin IDC plug is sold separately: A6CON-L5P <Optional> Online connector for communication: A6CON-LJ5P			
	Power supply part	One-touch connector for power supply and FG [Module power supply, I/O power supply, FG] 5-pin IDC plug is sold separately: A6CON-PW5P, A6CON-PW5P-SOD <Optional> Online connector for power supply: A6CON-PWJ5P			
	I/O part	Sensor connector (e-CON) [I/O signals] 4-pin IDC plug is sold separately. ＊1			
Applicable DIN rail		TH35-7.5Fe, TH35-7.5Al (compliant with IEC 60715 and JIS C 2812)			
Applicable wire size	Connector for communication	Applicable cable: FANC-110SBH, FA-CBL200PSBH, CS-110			
	Connector for power supply and FG	0.66 to 0.98mm^2 (18 AWG) [ϕ2.2 to 3.0mm (A6CON-PW5P), ϕ2.0 to 2.3mm (A6CON-PW5P-SOD)] Wire diameter: 0.16mm or more Insulating coating material: PVC (heat-resistant)			
	Connector for I/O	Sensor connector (e-CON). Applicable connector plugs are sold separately. ＊1 (applicable wire size: 0.08 to 0.5mm^2, depending on the connector plug)			
Accessory		User's manual, Holding fixtures for screw installation			

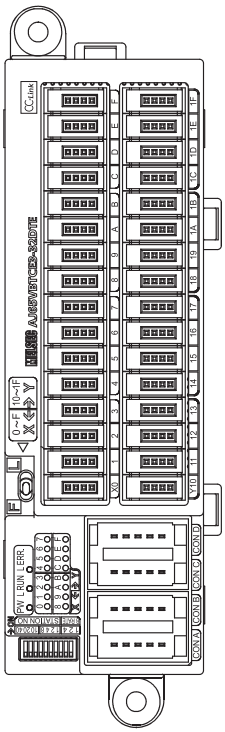

＊1: Refer to Section 1.6.2 for details.

6 - 58

AbN
automation

External connection

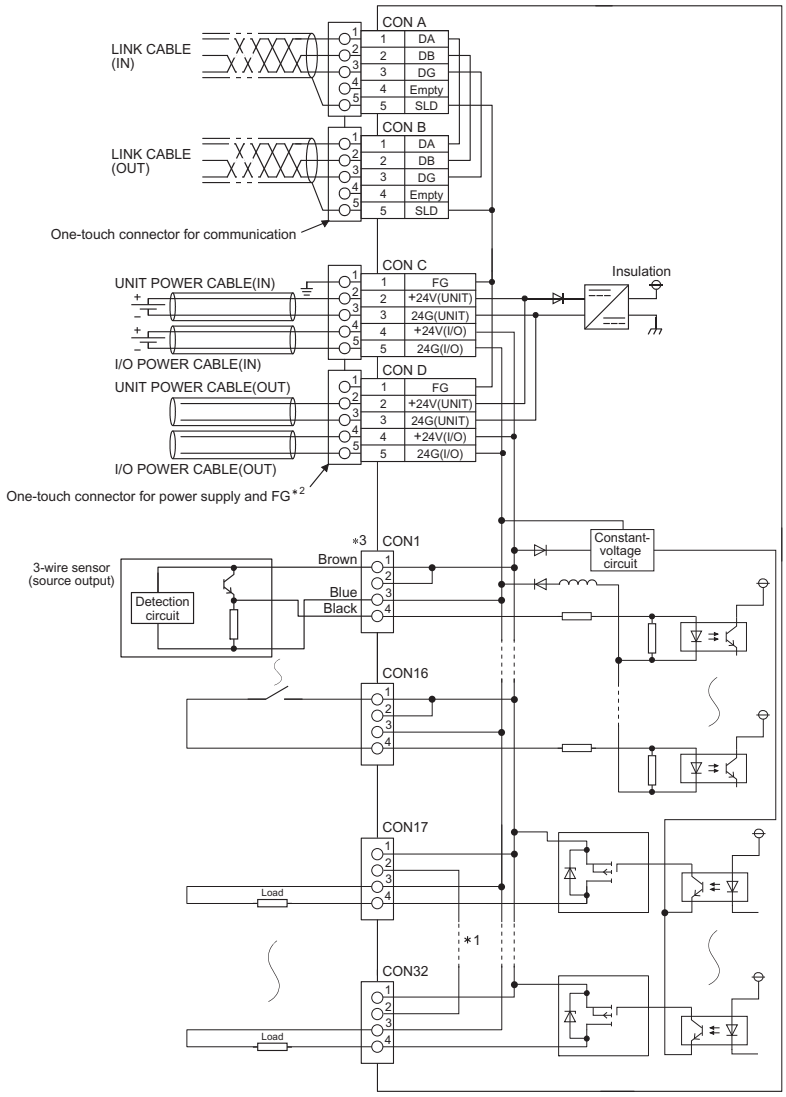

Pin number		Signal name	Pin number		Signal name
CON A,B	1	DA	CON C,D	1	⏚ (FG)
	2	DB		2	+24V (UNIT)
	3	DG		3	24G (UNIT)
	4	Empty		4	+24V(I/O)
	5	SLD		5	24G(I/O)

Pin number		Signal name	Pin number		Signal name
CON1 (X0)	1	+24V	CON17 (Y10)	1	+24V
	2	+V		2	Empty ＊1
	3	24G		3	24G
	4	X0		4	Y10
CON2 (X1)	1	+24V	CON18 (Y11)	1	+24V
	2	+V		2	Empty ＊1
	3	24G		3	24G
	4	X1		4	Y11
CON3 (X2)	1	+24V	CON19 (Y12)	1	+24V
	2	+V		2	Empty ＊1
	3	24G		3	24G
	4	X2		4	Y12
CON4 (X3)	1	+24V	CON20 (Y13)	1	+24V
	2	+V		2	Empty ＊1
	3	24G		3	24G
	4	X3		4	Y13
CON5 (X4)	1	+24V	CON21 (Y14)	1	+24V
	2	+V		2	Empty ＊1
	3	24G		3	24G
	4	X4		4	Y14
CON6 (X5)	1	+24V	CON22 (Y15)	1	+24V
	2	+V		2	Empty ＊1
	3	24G		3	24G
	4	X5		4	Y15
CON7 (X6)	1	+24V	CON23 (Y16)	1	+24V
	2	+V		2	Empty ＊1
	3	24G		3	24G
	4	X6		4	Y16
CON8 (X7)	1	+24V	CON24 (Y17)	1	+24V
	2	+V		2	Empty ＊1
	3	24G		3	24G
	4	X7		4	Y17
CON9 (X8)	1	+24V	CON25 (Y18)	1	+24V
	2	+V		2	Empty ＊1
	3	24G		3	24G
	4	X8		4	Y18
CON10 (X9)	1	+24V	CON26 (Y19)	1	+24V
	2	+V		2	Empty ＊1
	3	24G		3	24G
	4	X9		4	Y19
CON11 (XA)	1	+24V	CON27 (Y1A)	1	+24V
	2	+V		2	Empty ＊1
	3	24G		3	24G
	4	XA		4	Y1A
CON12 (XB)	1	+24V	CON28 (Y1B)	1	+24V
	2	+V		2	Empty ＊1
	3	24G		3	24G
	4	XB		4	Y1B
CON13 (XC)	1	+24V	CON29 (Y1C)	1	+24V
	2	+V		2	Empty ＊1
	3	24G		3	24G
	4	XC		4	Y1C
CON14 (XD)	1	+24V	CON30 (Y1D)	1	+24V
	2	+V		2	Empty ＊1
	3	24G		3	24G
	4	XD		4	Y1D
CON15 (XE)	1	+24V	CON31 (Y1E)	1	+24V
	2	+V		2	Empty ＊1
	3	24G		3	24G
	4	XE		4	Y1E
CON16 (XF)	1	+24V	CON32 (Y1F)	1	+24V
	2	+V		2	Empty ＊1
	3	24G		3	24G
	4	XF		4	Y1F

＊1: Since all No.2 pins of CON17 to CON32 are connected inside the module, they cannot be used.
＊2: Attach an unwired connector plug to an unused one-touch connector for power supply and FG.
＊3: Wiring the sensor connector (e-CON) incorrectly may cause malfunction or failure due to short circuit of the power supply.

6 - 59

External connection

<When using online connectors>

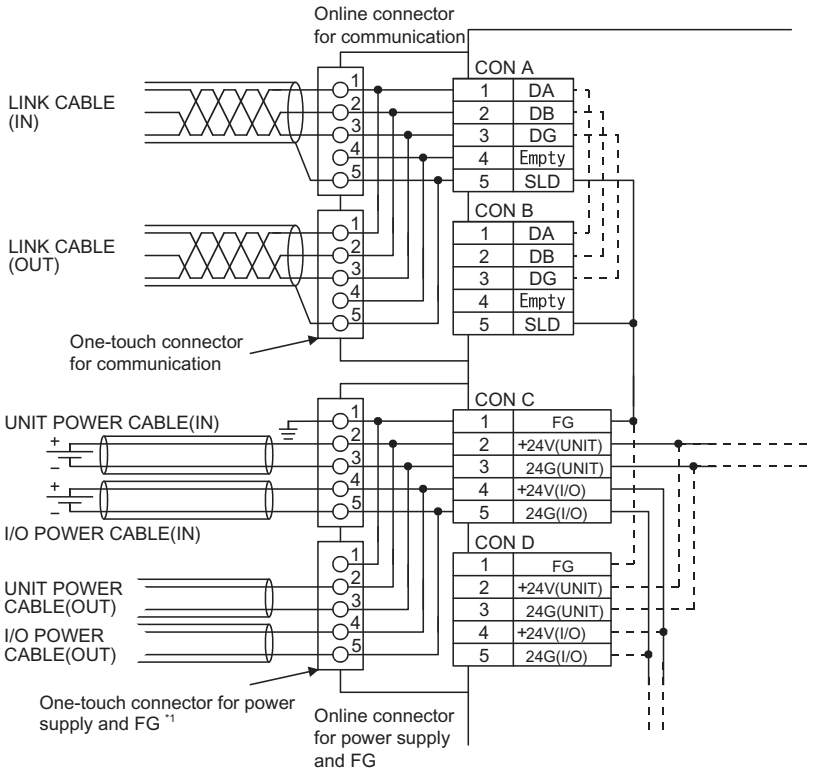

* 1: Attach an unwired connector plug to an unused one-touch connector for power supply and FG.

Pin layout

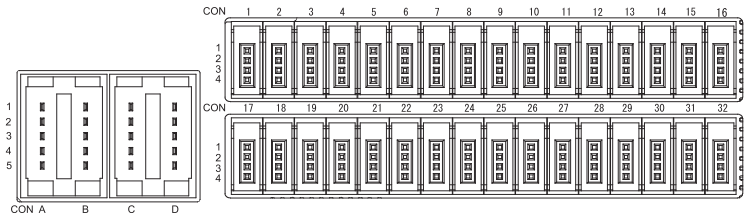

Viewed from the front of the module

6 - 60

AbN
automation

6.4 One Touch Connector Type Combined Module

6.4.1 AJ65SBTC4-16DT combined module

Item \ Type			DC input transistor output combined module: AJ65SBTC4-16DT			Appearance
Input				Output		
Number of input points			8 points	Number of output points		8 points
Isolation method			Photocoupler	Isolation method		Photocoupler
Rated input voltage			24VDC (ripple ratio: within 5%)	Rated load voltage		24VDC (ripple ratio: within 5%)
Rated input current			Approx. 5mA	Operating load voltage range		19.2 to 26.4VDC
Operating voltage range			19.2 to 26.4VDC	Max. load current		0.5A/point, 2.4A/common
Max. number of simultaneous input points			100%	Max. inrush current		1.0A 10ms or less
ON voltage/ON current			14VDC or higher/3.5mA or higher	Leakage current at OFF		0.25mA or lower
OFF voltage/OFF current			6VDC or lower/1.7mA or lower	Max. voltage drop at ON		0.3VDC or lower (TYP.) 0.5A, 0.6VDC or lower (MAX.) 0.5A
Input resistance			Approx. 4.7kΩ	Output type		Sink type
Response time	OFF→ON		1.5ms or less (at 24VDC)	Protection function		Overload protection, overvoltage protection, overheat protection
	ON→OFF		1.5ms or less (at 24VDC)			
				Response time	OFF→ON	0.5ms or less
					ON→OFF	1.5ms or less (resistive load)
				External power supply for output part	Voltage	24VDC (ripple ratio: within 5%) (allowable voltage range: 19.2 to 26.4VDC)
					Current	13mA or lower (at 24VDC and all points ON), excluding external load current
Input type			Positive common (sink type)	Surge suppressor		Zener diode
Supply current for connected device			1.0A or lower/common			
Wiring method for common			16 points/common (4-wire, one-touch connector type)			
Number of occupied stations			32-point assignment/station (16 points used)			
Module power supply	Voltage		24VDC (ripple ratio: within 5%) (allowable voltage range: 20.4 to 26.4VDC)			
	Current		40mA or lower (at 24VDC and all points ON)			
Noise immunity			Noise voltage 500Vp-p, noise width 1μs, noise frequency 25 to 60Hz (DC type noise simulator condition)			
Withstand voltage			500VAC for 1 minute between all DC external terminals and ground			
Insulation resistance			10MΩ or higher between all DC external terminals and ground (500VDC insulation resistance tester)			
Protection degree			IP2X			
Weight			0.15kg			
External connection system	Communication part, module power supply part		7-point two-piece terminal block [Transmission circuit, module power supply, FG] M3×5.2 screw (tightening torque range: 0.59 to 0.88N•m) Applicable solderless terminal: 2 or less			
	I/O power supply part		2-point direct-mount terminal block [I/O power supply] M3×5.2 screw (tightening torque range: 0.59 to 0.88N•m) Applicable solderless terminal: 2 or less			
	I/O part		Dedicated one-touch connector [I/O signals] 4-pin IDC plug is sold separately.			
Module mounting screw			M4 screw with plain washer finished round (tightening torque range: 0.78 to 1.08N•m) Mountable with a DIN rail in 6 orientations			
Applicable DIN rail			TH35-7.5Fe, TH35-7.5Al (compliant with IEC 60715 and JIS C 2812)			
Applicable wire size	Communication part, module power supply part	Applicable solderless terminal	• RAV1.25-3 (compliant with JIS C 2805) [Applicable wire size: 0.3 to 1.25mm^2 (22 to 16 AWG) stranded wire] • V2-MS3, RAP2-3SL, TGV2-3N [Applicable wire size: 1.25 to 2.0mm^2 (16 to 14 AWG) stranded wire]			
	I/O power supply part					
	I/O part		ϕ1.0 to 1.4 (A6CON-P214), ϕ1.4 to 2.0 (A6CON-P220) [Applicable wire size: 0.14 to 0.2mm^2 (26 to 24 AWG) stranded wire] ϕ1.0 to 1.4 (A6CON-P514), ϕ1.4 to 2.0 (A6CON-P520) [Applicable wire size: 0.3 to 0.5 mm^2 (22 to 20 AWG) stranded wire]			
Wire	Material		Copper			
	Temperature rating		75°C or more			
Accessory			User's manual			

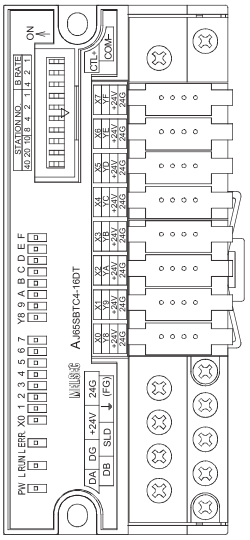

* For applicable solderless terminals connected to the terminal block, refer to the table above. Use applicable wires for the solderless terminals and fix them with an appropriate tightening torque. Use UL listed solderless terminals and, for crimping, use a tool recommended by their manufacturer.

6 - 61

External connection

<Connection example of 4-, 3-, and 2-wire sensors>

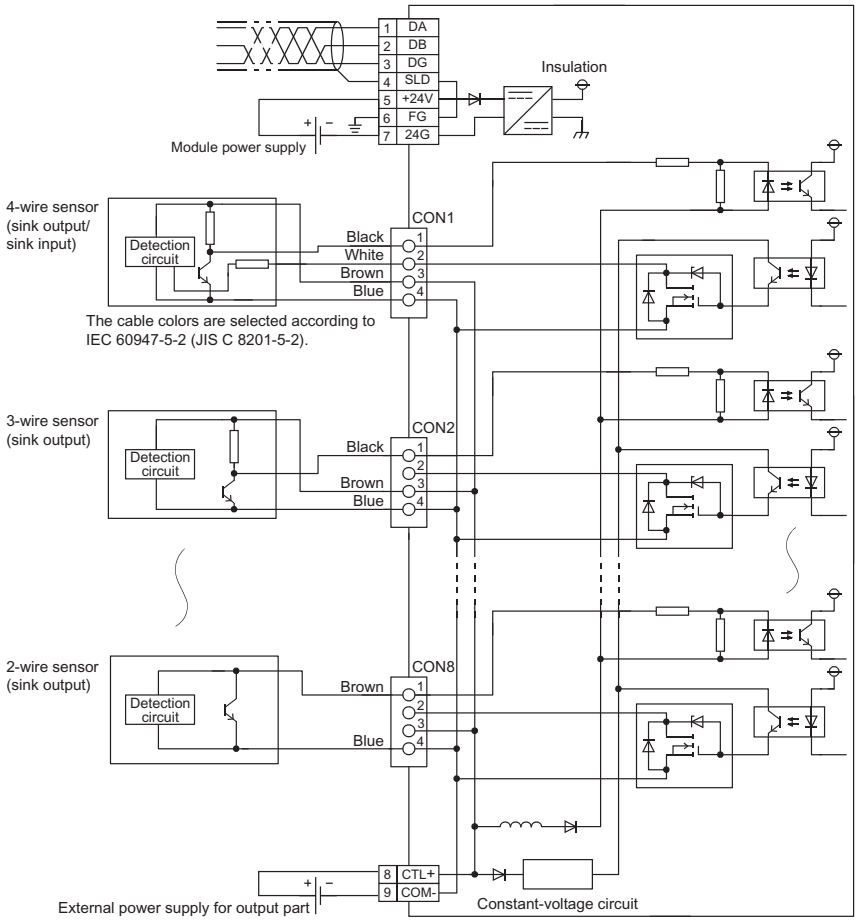

<Connection example of other I/O devices>

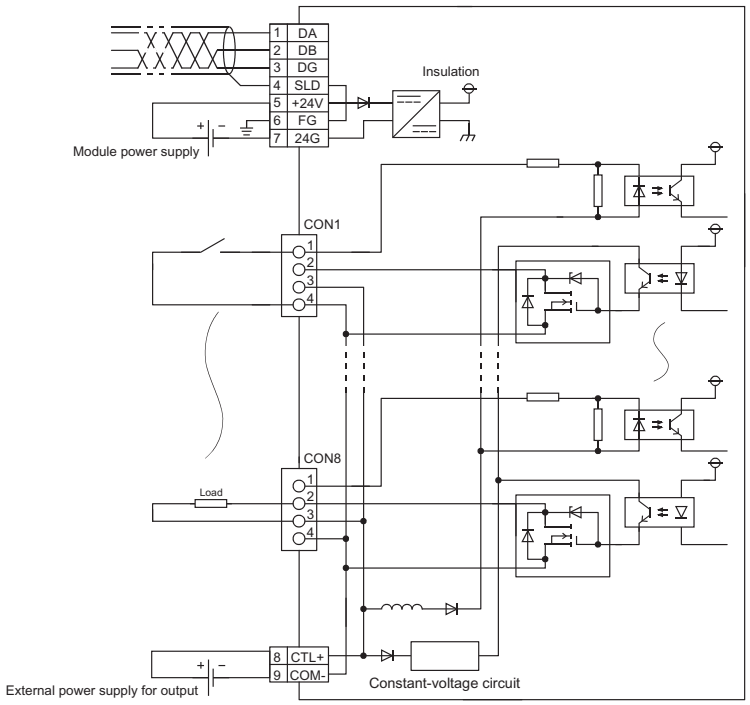

Terminal number	Signal name
TB1	DA
TB2	DB
TB3	DG
TB4	SLD
TB5	+24V
TB6	⏚ (FG)
TB7	24G

Pin number		Signal name
CON1	1	X0
	2	Y8
	3	+24V
	4	24G
CON2	1	X1
	2	Y9
	3	+24V
	4	24G
CON3	1	X2
	2	YA
	3	+24V
	4	24G
CON4	1	X3
	2	YB
	3	+24V
	4	24G
CON5	1	X4
	2	YC
	3	+24V
	4	24G
CON6	1	X5
	2	YD
	3	+24V
	4	24G
CON7	1	X6
	2	YE
	3	+24V
	4	24G
CON8	1	X7
	2	YF
	3	+24V
	4	24G

Terminal number	Signal name
TB8	CTL+
TB9	COM-

Pin layout

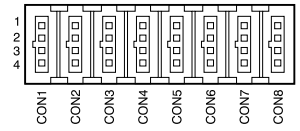

Viewed from the front of the module

6 - 62

AbN
automation

6.4.2 AJ65SBTC4-16DT2 combined module

Item \ Type			DC input transistor output combined module			
			AJ65SBTC4-16DT2			Appearance
Input				Output		
Number of input points			8 points	Number of output points		8 points
Isolation method			Photocoupler	Isolation method		Photocoupler
Rated input voltage			24VDC (ripple ratio: within 5%)	Rated load voltage		24VDC (ripple ratio: within 5%)
Rated input current			Approx. 5mA	Operating load voltage range		19.2 to 26.4VDC
Operating voltage range			19.2 to 26.4VDC	Max. load current		0.5A/point, 2.4A/common
Max. number of simultaneous input points			100%	Max. inrush current		1.0A, 10ms or less
ON voltage/ON current			14VDC or higher/ 3.5mA or higher	Leakage current at OFF		0.1mA or lower
OFF voltage/OFF current			6VDC or lower/ 1.7mA or lower	Max. voltage drop at ON		0.3VDC or lower (TYP.) 0.5A, 0.6VDC or lower (MAX.) 0.5A
Input resistance			Approx. 4.7kΩ	Output type		Sink type
Response time	OFF→ON		1.5ms or less (at 24VDC)	Protection function		None
	ON→OFF		1.5ms or less (at 24VDC)	Response time	OFF→ON	0.5ms or less
					ON→OFF	1.5ms or less (resistive load)
				External power supply for output part	Voltage	24VDC (ripple ratio: within 5%) (allowable voltage range: 19.2 to 26.4VDC)
					Current	13mA or lower (at 24VDC and all points ON), excluding external load current
Input type			Positive common (sink type)	Surge suppressor		Zener diode
Supply current for connected device			1.0A or lower/common			
Wiring method for common			16 points/common (4-wire, one-touch connector type)			
Number of occupied stations			32-point assignment/station (16 points used)			
Module power supply	Voltage		24VDC (ripple ratio: within 5%) (allowable voltage range: 20.4 to 26.4VDC)			
	Current		40mA or lower (at 24VDC and all points ON)			
Noise immunity			Noise voltage 500Vp-p, noise width 1μs, noise frequency 25 to 60Hz (DC type noise simulator condition)			
Withstand voltage			500VAC for 1 minute between all DC external terminals and ground			
Insulation resistance			10MΩ or higher between all DC external terminals and ground (500VDC insulation resistance tester)			
Protection degree			IP2X			
Weight			0.15kg			
External connection system	Communication part, module power supply part		7-point two-piece terminal block [Transmission circuit, module power supply, FG] M3×5.2 screw (tightening torque range: 0.59 to 0.88N•m) Applicable solderless terminal: 2 or less			
	I/O power supply part		2-point direct-mount terminal block [I/O power supply] M3×5.2 screw (tightening torque range: 0.59 to 0.88N•m) Applicable solderless terminal: 2 or less			
	I/O part		Dedicated one-touch connector [I/O signals] 4-pin IDC plug is sold separately.			
Module mounting screw			M4 screw with plain washer finished round (tightening torque range: 0.78 to 1.08N•m) Mountable with a DIN rail in 6 orientations			
Applicable DIN rail			TH35-7.5Fe, TH35-7.5Al (compliant with IEC 60715 and JIS C 2812)			
Applicable wire size	Communication part, module power supply part	Applicable solderless terminal	• RAV1.25-3 (compliant with JIS C 2805) [Applicable wire size: 0.3 to 1.25mm^2 (22 to 16 AWG) stranded wire] • V2-MS3, RAP2-3SL, TGV2-3N [Applicable wire size: 1.25 to 2.0mm^2 (16 to 14 AWG) stranded wire]			
	I/O power supply part					
	I/O part		ϕ1.0 to 1.4 (A6CON-P214), ϕ1.4 to 2.0 (A6CON-P220) [Applicable wire size: 0.14 to 0.2mm^2 (26 to 24 AWG) stranded wire] ϕ1.0 to 1.4 (A6CON-P514), ϕ1.4 to 2.0 (A6CON-P520) [Applicable wire size: 0.3 to 0.5 mm^2 (22 to 20 AWG) stranded wire]			
Wire	Material		Copper			
	Temperature rating		75°C or more			
Accessory			User's manual			

* For applicable solderless terminals connected to the terminal block, refer to the table above. Use applicable wires for the solderless terminals and fix them with an appropriate tightening torque. Use UL listed solderless terminals and, for crimping, use a tool recommended by their manufacturer.

6 - 63

External connection

<Connection example of 4-, 3-, and 2-wire sensors >

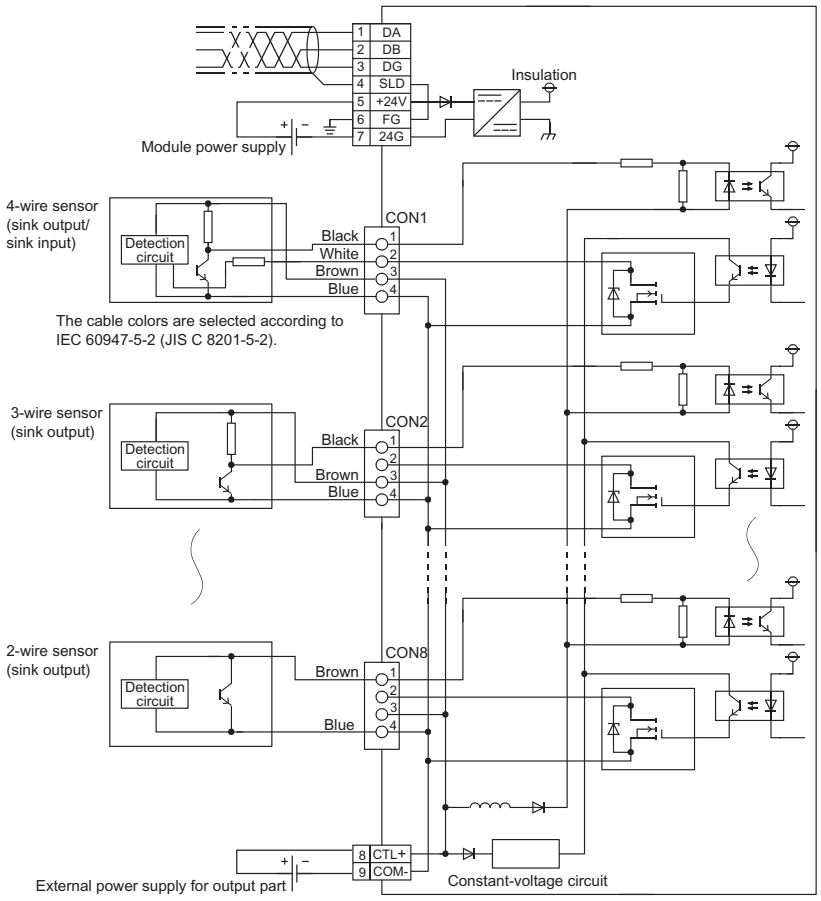

< Connection example of other I/O devices >

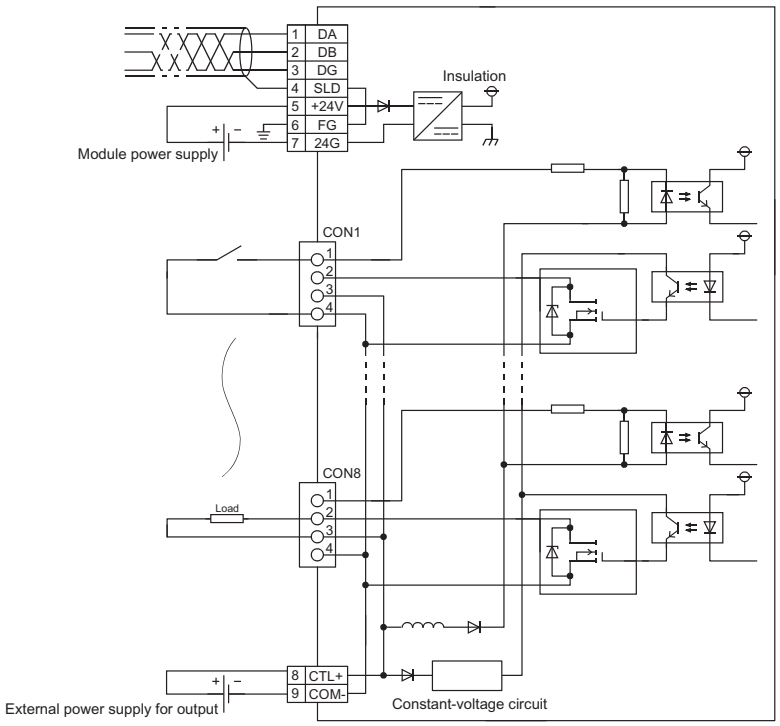

Terminal number	Signal name
TB1	DA
TB2	DB
TB3	DG
TB4	SLD
TB5	+24V
TB6	⏚ (FG)
TB7	24G

Pin number		Signal name
CON1	1	X0
	2	Y8
	3	+24V
	4	24G
CON2	1	X1
	2	Y9
	3	+24V
	4	24G
CON3	1	X2
	2	YA
	3	+24V
	4	24G
CON4	1	X3
	2	YB
	3	+24V
	4	24G
CON5	1	X4
	2	YC
	3	+24V
	4	24G
CON6	1	X5
	2	YD
	3	+24V
	4	24G
CON7	1	X6
	2	YE
	3	+24V
	4	24G
CON8	1	X7
	2	YF
	3	+24V
	4	24G

Terminal number	Signal name
TB8	CTL+
TB9	COM-

Pin layout

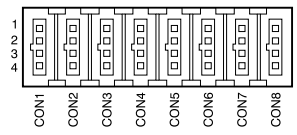

Viewed from the front of the module

6 - 64

AbN
automation

6.4.3 AJ65SBTC1-32DT combined module

Item \ Type			DC input transistor output combined module			
			AJ65SBTC1-32DT			Appearance
Input				Output		
Number of input points			16 points	Number of output points		16 points
Isolation method			Photocoupler	Isolation method		Photocoupler
Rated input voltage			24VDC (ripple ratio: within 5%)	Rated load voltage		24VDC (ripple ratio: within 5%)
Rated input current			Approx. 5mA	Operating load voltage range		19.2 to 26.4VDC
Operating voltage range			19.2 to 26.4VDC	Max. load current		0.1A/point, 1.6A/common
Max. number of simultaneous input points			100%	Max. inrush current		1.0A, 10ms or less
ON voltage/ON current			14VDC or higher/3.5mA or higher	Leakage current at OFF		0.25mA or lower
OFF voltage/OFF current			6VDC or lower/ 1.7mA or lower	Max. voltage drop at ON		0.3VDC or lower (TYP.) 0.1A, 0.6VDC or lower (MAX.) 0.1A
Input resistance			Approx. 4.7kΩ	Output type		Sink type
Response time		OFF→ON	1.5ms or less (at 24VDC)	Protection function		Overload protection, overvoltage protection, overheat protection
		ON→OFF	1.5ms or less (at 24VDC)	Response time	OFF→ON	0.5ms or less
					ON→OFF	1.5ms or less (resistive load)
				External power supply for output part	Voltage	24VDC (ripple ratio: within 5%) (allowable voltage range: 19.2 to 26.4VDC)
					Current	17mA or lower (at 24VDC and all points ON), excluding external load current
Input type			Positive common (sink type)	Surge suppressor		Zener diode
Wiring method for common			32 points/common (1-wire, one-touch connector type)			
Number of occupied stations			32-point assignment/station (32 points used)			
Module power supply		Voltage	24VDC (ripple ratio: within 5%) (allowable voltage range: 20.4 to 26.4VDC)			
		Current	50mA or lower (at 24VDC and all points ON)			
Noise immunity			Noise voltage 500Vp-p, noise width 1μs, noise frequency 25 to 60Hz (DC type noise simulator condition)			
Withstand voltage			500VAC for 1 minute between all DC external terminals and ground			
Insulation resistance			10MΩ or higher between all DC external terminals and ground (500VDC insulation resistance tester)			
Weight			0.16kg			
External connection system	Communication part, module power supply part		7-point two-piece terminal block [Transmission circuit, module power supply, FG] M3×5.2 screw (tightening torque range: 0.59 to 0.88N•m) Applicable solderless terminal: 2 or less			
	I/O power supply part		2-point direct-mount terminal block [I/O power supply] M3×5.2 screw (tightening torque range: 0.59 to 0.88N•m) Applicable solderless terminal: 2 or less			
	I/O part		Dedicated one-touch connector [I/O signals] 4-pin IDC plug is sold separately.			
Module mounting screw			M4 screw with plain washer finished round (tightening torque range: 0.78 to 1.08N•m) Mountable with a DIN rail in 6 orientations			
Applicable DIN rail			TH35-7.5Fe, TH35-7.5Al (compliant with IEC 60715 and JIS C 2812)			
Applicable wire size	Communication part, module power supply part	Applicable solderless terminal	• RAV1.25-3 (compliant with JIS C 2805) [Applicable wire size: 0.3 to 1.25mm^2 (22 to 16 AWG) stranded wire] • V2-MS3, RAP2-3SL, TGV2-3N [Applicable wire size: 1.25 to 2.0mm^2 (16 to 14 AWG) stranded wire]			
	I/O power supply part					
	I/O part		ϕ1.0 to 1.4 (A6CON-P214), ϕ1.4 to 2.0 (A6CON-P220) [Applicable wire size: 0.14 to 0.2mm^2 (26 to 24 AWG) stranded wire] ϕ1.0 to 1.4 (A6CON-P514), ϕ1.4 to 2.0 (A6CON-P520) [Applicable wire size: 0.3 to 0.5 mm^2 (22 to 20 AWG) stranded wire]			
Wire	Material		Copper			
	Temperature rating		75°C or more			
Accessory			User's manual			

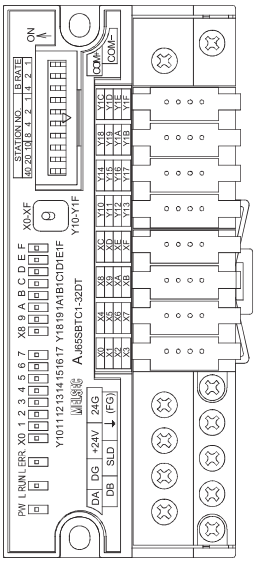

* For applicable solderless terminals connected to the terminal block, refer to the table above. Use applicable wires for the solderless terminals and fix them with an appropriate tightening torque. Use UL listed solderless terminals and, for crimping, use a tool recommended by their manufacturer.

6 - 65

External connection

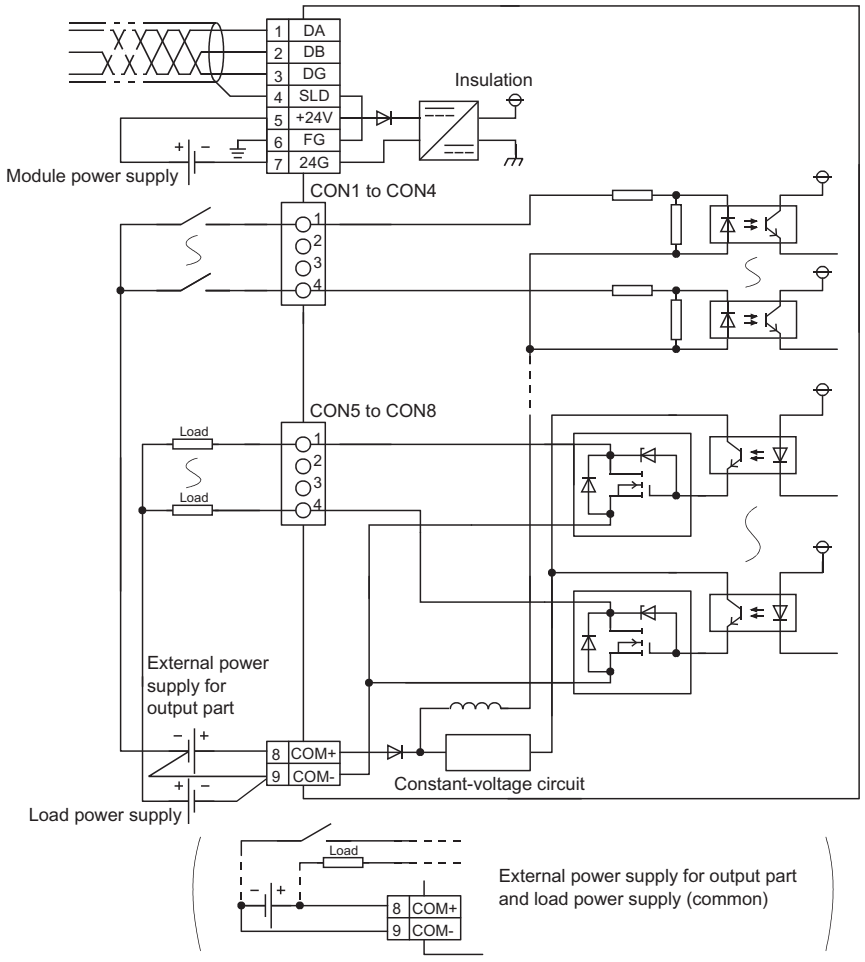

Terminal number		Signal name
TB1		DA
TB2		DB
TB3		DG
TB4		SLD
TB5		+24V
TB6		⏚ (FG)
TB7		24G
Pin number		Signal name
CON1	1	X0
	2	X1
	3	X2
	4	X3
CON2	1	X4
	2	X5
	3	X6
	4	X7
CON3	1	X8
	2	X9
	3	XA
	4	XB
CON4	1	XC
	2	XD
	3	XE
	4	XF
CON5	1	Y10
	2	Y11
	3	Y12
	4	Y13
CON6	1	Y14
	2	Y15
	3	Y16
	4	Y17
CON7	1	Y18
	2	Y19
	3	Y1A
	4	Y1B
CON8	1	Y1C
	2	Y1D
	3	Y1E
	4	Y1F
Terminal number		Signal name
TB8		COM+
TB9		COM-

Pin layout

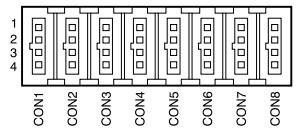

Viewed from the front of the module

6 - 66

AbN
automation

6.4.4 AJ65SBTC1-32DT1 combined module

Item \ Type			DC input transistor output combined module			
			AJ65SBTC1-32DT1			Appearance
Input				Output		
Number of input points			16 points	Number of output points		16 points
Isolation method			Photocoupler	Isolation method		Photocoupler
Rated input voltage			24VDC (ripple ratio: within 5%)	Rated load voltage		24VDC (ripple ratio: within 5%)
Rated input current			Approx. 5mA	Operating load voltage range		19.2 to 26.4VDC
Operating voltage range			19.2 to 26.4VDC	Max. load current		0.1A/point, 1.6A/common
Max. number of simultaneous input points			100%	Max. inrush current		1.0A, 10ms or less
ON voltage/ON current			15VDC or higher/ 3mA or higher	Leakage current at OFF		0.25mA or lower
OFF voltage/OFF current			3VDC or lower/ 0.5mA or lower	Max. voltage drop at ON		0.3VDC or lower (TYP.) 0.1A, 0.6VDC or lower (MAX.) 0.1A
Input resistance			Approx. 4.7kΩ	Output type		Sink type
Response time		OFF→ON	0.2ms or less (at 24VDC)	Protection function		Overload protection, overvoltage protection, overheat protection
		ON→OFF	0.2ms or less (at 24VDC)	Response time	OFF→ON	0.5ms or less
					ON→OFF	1.5ms or less (resistive load)
				External power supply for output part	Voltage	24VDC (ripple ratio: within 5%) (allowable voltage range: 19.2 to 26.4VDC)
					Current	17mA or lower (at 24VDC and all points ON), excluding external load current
Input type			Positive common (sink type)	Surge suppressor		Zener diode
Wiring method for common			32 points/common (1-wire, one-touch connector type)			
Number of occupied stations			32-point assignment/station (32 points used)			
Module power supply		Voltage	24VDC (ripple ratio: within 5%) (allowable voltage range: 20.4 to 26.4VDC)			
		Current	50mA or lower (at 24VDC and all points ON)			
Noise immunity			Noise voltage 500Vp-p, noise width 1μs, noise frequency 25 to 60Hz (DC type noise simulator condition)			
Withstand voltage			500VAC for 1 minute between all DC external terminals and ground			
Insulation resistance			10MΩ or higher between all DC external terminals and ground (500VDC insulation resistance tester)			
Protection degree			IP2X			
Weight			0.16kg			
External connection system	Communication part, module power supply part		7-point two-piece terminal block [Transmission circuit, module power supply, FG] M3×5.2 screw (tightening torque range: 0.59 to 0.88N•m) Applicable solderless terminal: 2 or less			
	I/O power supply part		2-point direct-mount terminal block [I/O power supply] M3×5.2 screw (tightening torque range: 0.59 to 0.88N•m) Applicable solderless terminal: 2 or less			
	I/O part		Dedicated one-touch connector [I/O signals] 4-pin IDC plug is sold separately.			
Module mounting screw			M4 screw with plain washer finished round (tightening torque range: 0.78 to 1.08N•m) Mountable with a DIN rail in 6 orientations			
Applicable DIN rail			TH35-7.5Fe, TH35-7.5Al (compliant with IEC 60715 and JIS C 2812)			
Applicable wire size	Communication part, module power supply part	Applicable solderless terminal	• RAV1.25-3 (compliant with JIS C 2805) [Applicable wire size: 0.3 to 1.25mm^2 (22 to 16 AWG) stranded wire] • V2-MS3, RAP2-3SL, TGV2-3N [Applicable wire size: 1.25 to 2.0mm^2 (16 to 14 AWG) stranded wire]			
	I/O power supply part					
	I/O part		ϕ1.0 to 1.4 (A6CON-P214), ϕ1.4 to 2.0 (A6CON-P220) [Applicable wire size: 0.14 to 0.2mm^2 (26 to 24 AWG) stranded wire] ϕ1.0 to 1.4 (A6CON-P514), ϕ1.4 to 2.0 (A6CON-P520) [Applicable wire size: 0.3 to 0.5 mm^2 (22 to 20 AWG) stranded wire]			
Wire	Material		Copper			
	Temperature rating		75°C or more			
Accessory			User's manual			

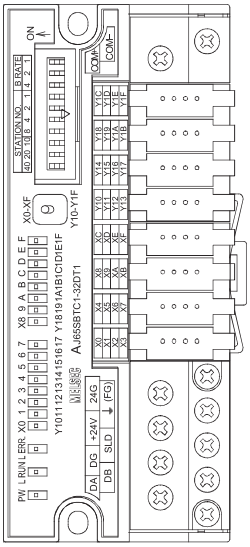

* For applicable solderless terminals connected to the terminal block, refer to the table above. Use applicable wires for the solderless terminals and fix them with an appropriate tightening torque. Use UL listed solderless terminals and, for crimping, use a tool recommended by their manufacturer.

6 - 67

External connection

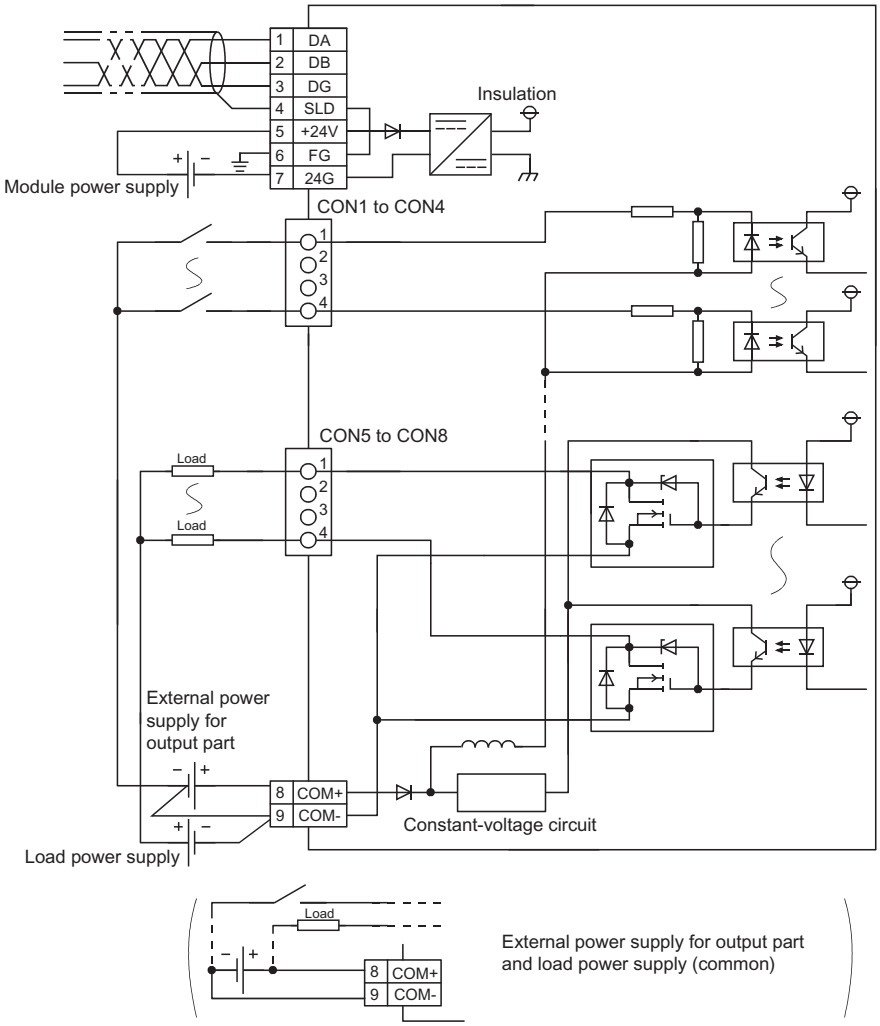

Terminal number		Signal name
TB1		DA
TB2		DB
TB3		DG
TB4		SLD
TB5		+24V
TB6		⏚ (FG)
TB7		24G
Pin number		Signal name
CON1	1	X0
	2	X1
	3	X2
	4	X3
CON2	1	X4
	2	X5
	3	X6
	4	X7
CON3	1	X8
	2	X9
	3	XA
	4	XB
CON4	1	XC
	2	XD
	3	XE
	4	XF
CON5	1	Y10
	2	Y11
	3	Y12
	4	Y13
CON6	1	Y14
	2	Y15
	3	Y16
	4	Y17
CON7	1	Y18
	2	Y19
	3	Y1A
	4	Y1B
CON8	1	Y1C
	2	Y1D
	3	Y1E
	4	Y1F
Terminal number		Signal name
TB8		COM+
TB9		COM-

Pin layout

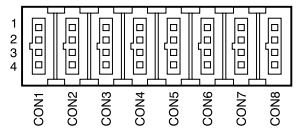

Viewed from the front of the module

6 - 68

AbN
automation

6.4.5 AJ65SBTC1-32DT2 combined module

Item \ Type			DC input transistor output combined module			Appearance
			AJ65SBTC1-32DT2			
Input			Output			
Number of input points		16 points	Number of output points		16 points	
Isolation method		Photocoupler	Isolation method		Photocoupler	
Rated input voltage		24VDC (ripple ratio: within 5%)	Rated load voltage		24VDC (ripple ratio: within 5%)	
Rated input current		Approx. 5mA	Operating load voltage range		19.2 to 26.4VDC	
Operating voltage range		19.2 to 26.4VDC	Max. load current		0.1A/point, 1.6A/common	
Max. number of simultaneous input points		100%	Max. inrush current		1.0A, 10ms or less	
ON voltage/ON current		14VDC or higher/ 3.5mA or higher	Leakage current at OFF		0.1mA or lower	
OFF voltage/OFF current		6VDC or lower/ 1.7mA or lower	Max. voltage drop at ON		0.3VDC or lower (TYP.) 0.1A, 0.6VDC or lower (MAX.) 0.1A	
Input resistance		Approx. 4.7kΩ	Output type		Sink type	
Response time	OFF→ON	1.5ms or less (at 24VDC)	Protection function		None	
	ON→OFF	1.5ms or less (at 24VDC)	Response time	OFF→ON	0.5ms or less	
				ON→OFF	1.5ms or less (resistive load)	
			External power supply for output part	Voltage	24VDC (ripple ratio: within 5%) (allowable voltage range: 19.2 to 26.4VDC)	
				Current	17mA or lower (at 24VDC and all points ON), excluding external load current	
Input type		Positive common (sink type)	Surge suppressor		Zener diode	
Wiring method for common		32 points/common (1-wire, one-touch connector type)				
Number of occupied stations		32-point assignment/station (32 points used)				
Module power supply	Voltage	24VDC (ripple ratio: within 5%) (allowable voltage range: 20.4 to 26.4VDC)				
	Current	50mA or lower (at 24VDC and all points ON)				
Noise immunity		Noise voltage 500Vp-p, noise width 1μs, noise frequency 25 to 60Hz (DC type noise simulator condition)				
Withstand voltage		500VAC for 1 minute between all DC external terminals and ground				
Insulation resistance		10MΩ or higher between all DC external terminals and ground (500VDC insulation resistance tester)				
Protection degree		IP2X				
Weight		0.16kg				
External connection system	Communication part, module power supply part	7-point two-piece terminal block [Transmission circuit, module power supply, FG] M3×5.2 screw (tightening torque range: 0.59 to 0.88N•m) Applicable solderless terminal: 2 or less				
	I/O power supply part	2-point direct-mount terminal block [I/O power supply] M3×5.2 screw (tightening torque range: 0.59 to 0.88N•m) Applicable solderless terminal: 2 or less				
	I/O part	Dedicated one-touch connector [I/O signals] 4-pin IDC plug is sold separately.				
Module mounting screw		M4 screw with plain washer finished round (tightening torque range: 0.78 to 1.08N•m) Mountable with a DIN rail in 6 orientations				
Applicable DIN rail		TH35-7.5Fe, TH35-7.5Al (compliant with IEC 60715 and JIS C 2812)				
Applicable wire size	Communication part, module power supply part	• RAV1.25-3 (compliant with JIS C 2805) [Applicable wire size: 0.3 to 1.25mm^2 (22 to 16 AWG) stranded wire] • V2-MS3, RAP2-3SL, TGV2-3N [Applicable wire size: 1.25 to 2.0mm^2 (16 to 14 AWG) stranded wire]				
	I/O power supply part					
	I/O part	ϕ1.0 to 1.4 (A6CON-P214), ϕ1.4 to 2.0 (A6CON-P220) [Applicable wire size: 0.14 to 0.2mm^2 (26 to 24 AWG) stranded wire] ϕ1.0 to 1.4 (A6CON-P514), ϕ1.4 to 2.0 (A6CON-P520) [Applicable wire size: 0.3 to 0.5 mm^2 (22 to 20 AWG) stranded wire]				
Wire	Material	Copper				
	Temperature rating	75°C or more				
Accessory		User's manual				

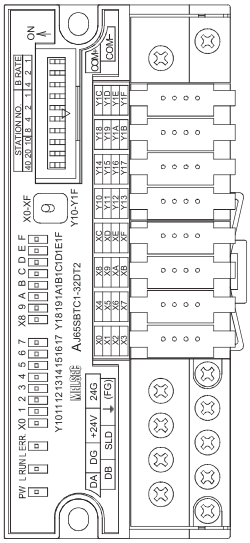

* For applicable solderless terminals connected to the terminal block, refer to the table above. Use applicable wires for the solderless terminals and fix them with an appropriate tightening torque. Use UL listed solderless terminals and, for crimping, use a tool recommended by their manufacturer.

6 - 69

External connection

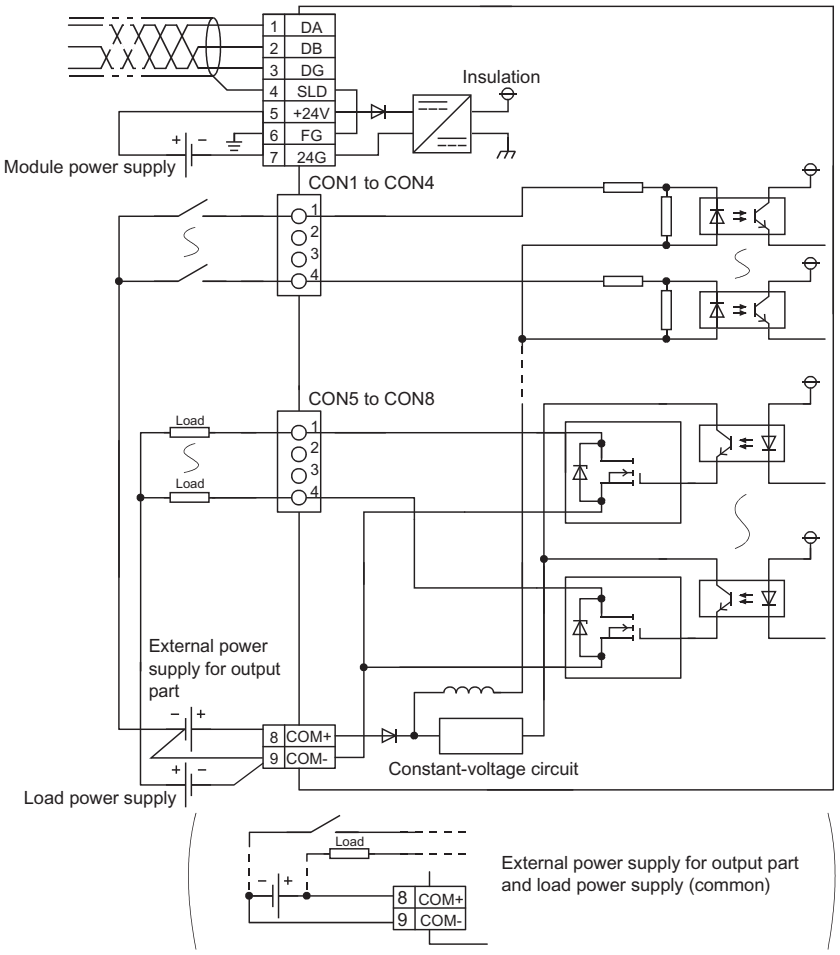

Terminal number		Signal name
TB1		DA
TB2		DB
TB3		DG
TB4		SLD
TB5		+24V
TB6		⏚ (FG)
TB7		24G
Pin number		Signal name
CON1	1	X0
	2	X1
	3	X2
	4	X3
CON2	1	X4
	2	X5
	3	X6
	4	X7
CON3	1	X8
	2	X9
	3	XA
	4	XB
CON4	1	XC
	2	XD
	3	XE
	4	XF
CON5	1	Y10
	2	Y11
	3	Y12
	4	Y13
CON6	1	Y14
	2	Y15
	3	Y16
	4	Y17
CON7	1	Y18
	2	Y19
	3	Y1A
	4	Y1B
CON8	1	Y1C
	2	Y1D
	3	Y1E
	4	Y1F
Terminal number		Signal name
TB8		COM+
TB9		COM-

Pin layout

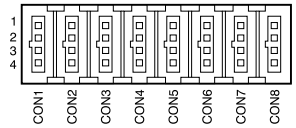

Viewed from the front of the module

6 - 70

AbN
automation

6.4.6 AJ65SBTC1-32DT3 combined module

Item \ Type			DC input transistor output combined module: AJ65SBTC1-32DT3			Appearance
Input				Output		
Number of input points			16 points	Number of output points	16 points	
Isolation method			Photocoupler	Isolation method	Photocoupler	
Rated input voltage			24VDC (ripple ratio: within 5%)	Rated load voltage	24VDC (ripple ratio: within 5%)	
Rated input current			Approx. 5mA	Operating load voltage range	19.2 to 26.4VDC	
Operating voltage range			19.2 to 26.4VDC	Max. load current	0.1A/point, 1.6A/common	
Max. number of simultaneous input points			100%	Max. inrush current	1.0A, 10ms or less	
ON voltage/ON current			15VDC or higher/ 3mA or higher	Leakage current at OFF	0.1mA or lower	
OFF voltage/OFF current			3VDC or lower/ 0.5mA or lower	Max. voltage drop at ON	0.3VDC or lower (TYP.) 0.1A, 0.6VDC or lower (MAX.) 0.1A	
Input resistance			Approx. 4.7kΩ	Output type	Sink type	
Response time		OFF→ON	0.2ms or less (at 24VDC)	Protection function	None	
		ON→OFF	0.2ms or less (at 24VDC)	Response time	OFF→ON	0.5ms or less
					ON→OFF	1.5ms or less (resistive load)
				External power supply for output part	Voltage	24VDC (ripple ratio: within 5%) (allowable voltage range: 19.2 to 26.4VDC)
					Current	17mA or lower (at 24VDC and all points ON), excluding external load current
Input type			Positive common (sink type)	Surge suppressor	Zener diode	
Wiring method for common			32 points/common (1-wire, one-touch connector type)			
Number of occupied stations			32-point assignment/station (32 points used)			
Module power supply		Voltage	24VDC (ripple ratio: within 5%) (allowable voltage range: 20.4 to 26.4VDC)			
		Current	50mA or lower (at 24VDC and all points ON)			
Noise immunity			Noise voltage 500Vp-p, noise width 1μs, noise frequency 25 to 60Hz (DC type noise simulator condition)			
Withstand voltage			500VAC for 1 minute between all DC external terminals and ground			
Insulation resistance			10MΩ or higher between all DC external terminals and ground (500VDC insulation resistance tester)			
Protection degree			IP2X			
Weight			0.16kg			
External connection system	Communication part, module power supply part		7-point two-piece terminal block [Transmission circuit, module power supply, FG] M3×5.2 screw (tightening torque range: 0.59 to 0.88N•m) Applicable solderless terminal: 2 or less			
	I/O power supply part		2-point direct-mount terminal block [I/O power supply] M3×5.2 screw (tightening torque range: 0.59 to 0.88N•m) Applicable solderless terminal: 2 or less			
	I/O part		Dedicated one-touch connector [I/O signals] 4-pin IDC plug is sold separately.			
Module mounting screw			M4 screw with plain washer finished round (tightening torque range: 0.78 to 1.08N•m) Mountable with a DIN rail in 6 orientations			
Applicable DIN rail			TH35-7.5Fe, TH35-7.5Al (compliant with IEC 60715 and JIS C 2812)			
Applicable wire size	Communication part, module power supply part	Applicable solderless terminal	• RAV1.25-3 (compliant with JIS C 2805) [Applicable wire size: 0.3 to 1.25mm² (22 to 16 AWG) stranded wire] • V2-MS3, RAP2-3SL, TGV2-3N [Applicable wire size: 1.25 to 2.0mm² (16 to 14 AWG) stranded wire]			
	I/O power supply part					
	I/O part		ϕ1.0 to 1.4 (A6CON-P214), ϕ1.4 to 2.0 (A6CON-P220) [Applicable wire size: 0.14 to 0.2mm² (26 to 24 AWG) stranded wire] ϕ1.0 to 1.4 (A6CON-P514), ϕ1.4 to 2.0 (A6CON-P520) [Applicable wire size: 0.3 to 0.5 mm² (22 to 20 AWG) stranded wire]			
Wire	Material		Copper			
	Temperature rating		75°C or more			
Accessory			User's manual			

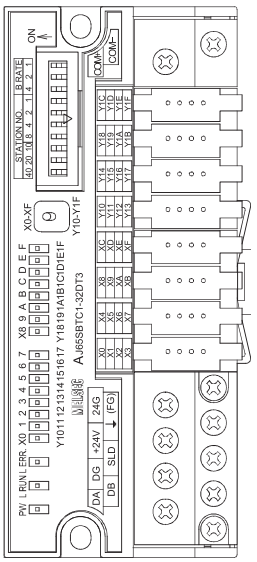

* For applicable solderless terminals connected to the terminal block, refer to the table above. Use applicable wires for the solderless terminals and fix them with an appropriate tightening torque. Use UL listed solderless terminals and, for crimping, use a tool recommended by their manufacturer.

6 - 71

External connection

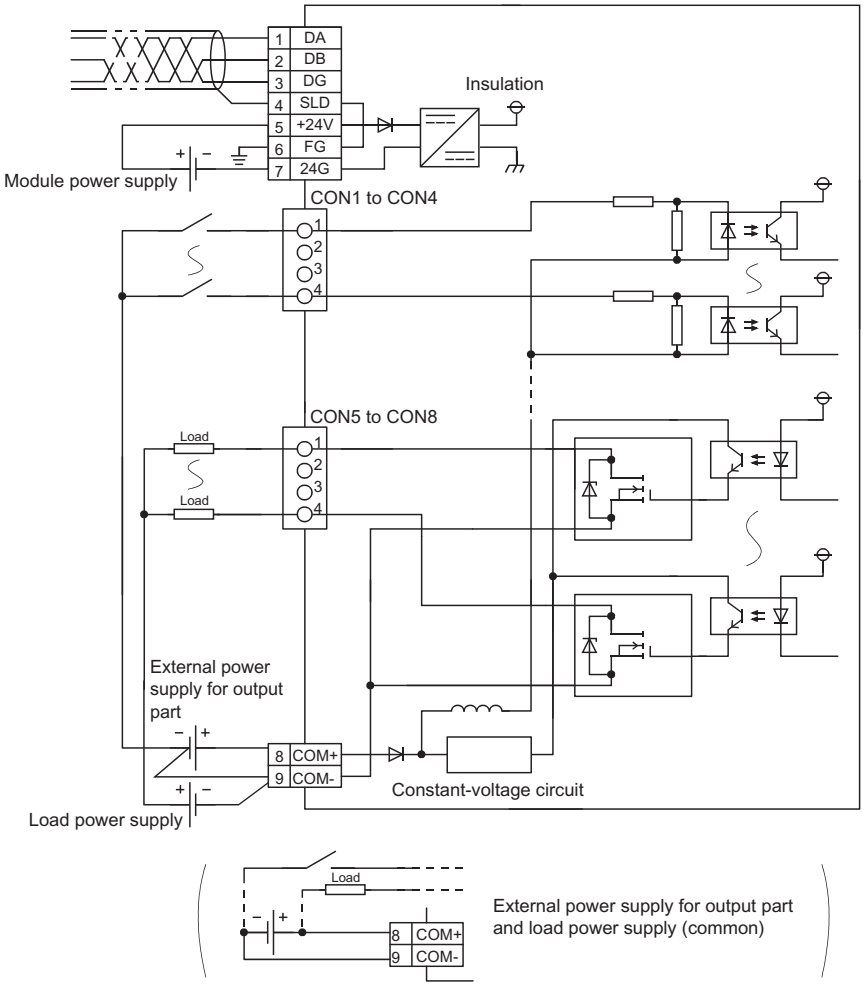

Terminal number		Signal name
TB1		DA
TB2		DB
TB3		DG
TB4		SLD
TB5		+24V
TB6		⏚ (FG)
TB7		24G
Pin number		Signal name
CON1	1	X0
	2	X1
	3	X2
	4	X3
CON2	1	X4
	2	X5
	3	X6
	4	X7
CON3	1	X8
	2	X9
	3	XA
	4	XB
CON4	1	XC
	2	XD
	3	XE
	4	XF
CON5	1	Y10
	2	Y11
	3	Y12
	4	Y13
CON6	1	Y14
	2	Y15
	3	Y16
	4	Y17
CON7	1	Y18
	2	Y19
	3	Y1A
	4	Y1B
CON8	1	Y1C
	2	Y1D
	3	Y1E
	4	Y1F
Terminal number		Signal name
TB8		COM+
TB9		COM-

Pin layout

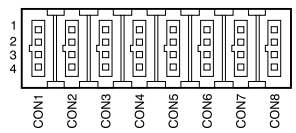

Viewed from the front of the module

6 - 72

AbN
automation

6.5 FCN Connector Type Combined Module

6.5.1 AJ65SBTCF1-32DT combined module

Item \ Type			DC input transistor output combined module			
			AJ65SBTCF1-32DT			Appearance
Input				Output		
Number of input points			16 points	Number of output points		16 points
Isolation method			Photocoupler	Isolation method		Photocoupler
Rated input voltage			24VDC (ripple ratio: within 5%)	Rated load voltage		12/24VDC (ripple ratio: within 5%)
Rated input current			Approx. 5mA	Operating load voltage range		10.2 to 26.4VDC
Operating voltage range			19.2 to 26.4VDC	Max. load current		0.1A/point (at all points ON: 0.1A/point), 1.6A/common
Max. number of simultaneous input points			100%	Max. inrush current		1.0A, 10ms or less
ON voltage/ON current			14VDC or higher/ 3.5mA or higher	Leakage current at OFF		0.1mA or lower
OFF voltage/OFF current			6VDC or lower/ 1.7mA or lower	Max. voltage drop at ON		0.1VDC or lower (TYP.) 0.1A, 0.2VDC or lower (MAX.) 0.1A
Input resistance			Approx. 4.7kΩ	Output type		Sink type
				Protection function		Overload protection, overvoltage protection, overheat protection
Response time	OFF→ON		1.5ms or less (at 24VDC)	Response time	OFF→ON	0.5ms or less
					ON→OFF	1.5ms or less (resistive load)
	ON→OFF		1.5ms or less (at 24VDC)	External power supply for output part	Voltage	12/24VDC (ripple ratio: within 5%) (allowable voltage range: 10.2 to 26.4VDC)
Wiring method for common			16 points/common (1-wire, FCN connector type)		Current	30mA or lower (at 24VDC and all points ON), excluding external load current
Input type			Positive/negative common shared type (sink/source shared type)	Wiring method for common		16 points/common (1-wire, FCN connector type)
				Surge suppressor		Zener diode
Number of occupied stations			32-point assignment/station (32 points used)			
Module power supply	Voltage		24VDC (ripple ratio: within 5%) (allowable voltage range: 20.4 to 26.4VDC)			
	Current		50mA or lower (at 24VDC and all points ON)			
Noise immunity			Noise voltage 500Vp-p, noise width 1μs, noise frequency 25 to 60Hz (DC type noise simulator condition)			
Withstand voltage			500VAC for 1 minute between all DC external terminals and ground			
Insulation resistance			10MΩ or higher between all DC external terminals and ground (500VDC insulation resistance tester)			
Protection degree			IP2X			
Weight			0.15kg			
External connection system	Communication part, module power supply part		7-point two-piece terminal block [Transmission circuit, module power supply, FG] M3×5.2 screw (tightening torque range: 0.59 to 0.88N•m) Applicable solderless terminal: 2 or less			
	I/O power supply part, I/O part		40-pin connector [I/O power supply, I/O signal] (A6CON1, A6CON2, A6CON3, A6CON4)			
Module mounting screw			M4 screw with plain washer finished round (tightening torque range: 0.78 to 1.08N•m) Mountable with a DIN rail in 6 orientations			
Applicable DIN rail			TH35-7.5Fe, TH35-7.5Al (compliant with IEC 60715 and JIS C 2812)			
Applicable wire size	Communication part, module power supply part	Applicable solderless terminal*1	• RAV1.25-3 (compliant with JIS C 2805) [Applicable wire size: 0.3 to 1.25mm² (22 to 16 AWG) stranded wire] • V2-MS3, RAP2-3SL, TGV2-3N [Applicable wire size: 1.25 to 2.0mm² (16 to 14 AWG) stranded wire]			
	I/O power supply part, I/O part		• 0.08 to 0.3mm² (28 to 22 AWG) stranded wire (A6CON1 and A6CON4)*2 • 0.08 to 0.2mm² (28 to 24 AWG) stranded wire (A6CON2) • 0.08mm² (28 AWG) stranded wire, ϕ0.25mm (30 AWG) single wire (A6CON3)			
Wire	Material		Copper			
	Temperature rating		75°C or more			
Accessory			User's manual			

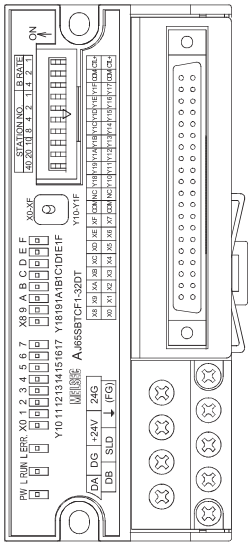

*1 For applicable solderless terminals connected to the terminal block, refer to the table above. Use applicable wires for the solderless terminals and fix them with an appropriate tightening torque. Use UL listed solderless terminals and, for crimping, use a tool recommended by their manufacturer.

*2 Use cables with outside diameter of 1.3mm or shorter to connect 40 cables to the connector. In addition, consider the amount of current to be used and select appropriate cables.

6 - 73

External connection

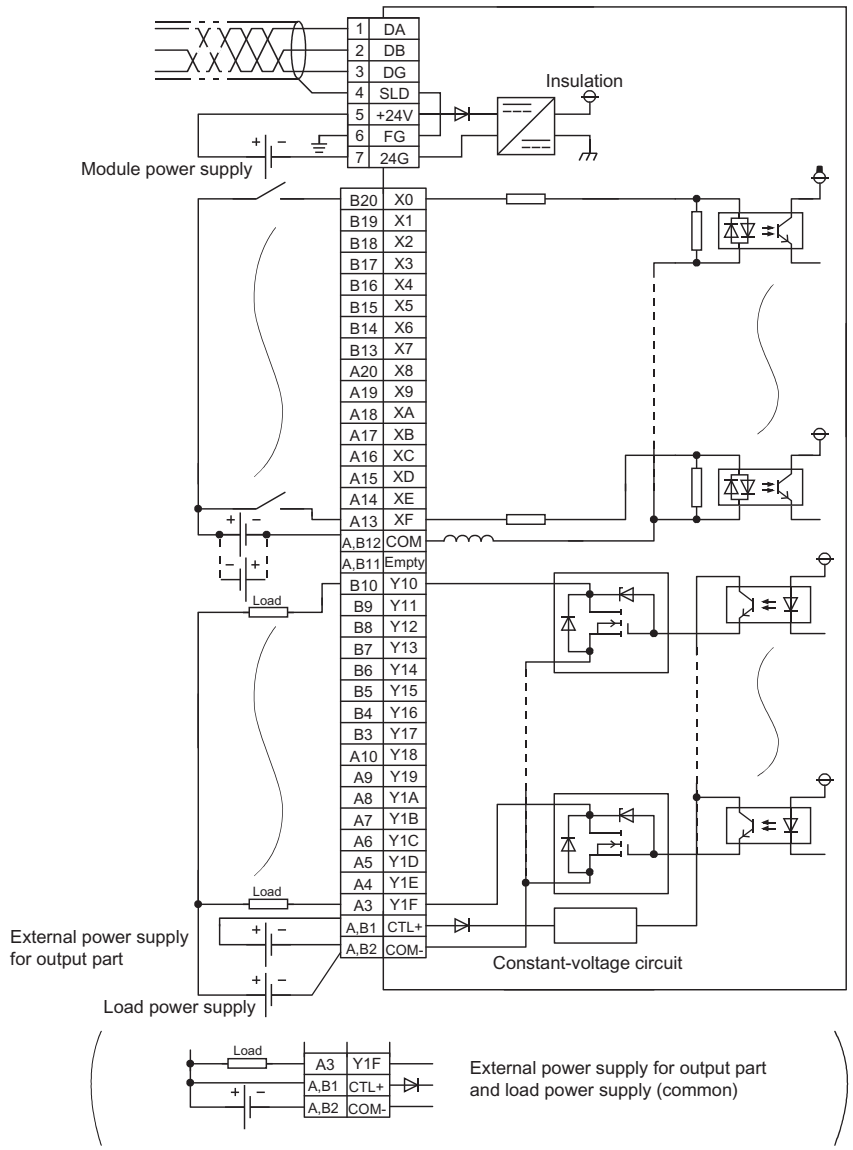

Pin layout

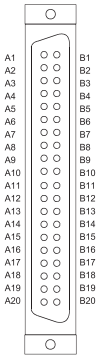

Viewed from the front of the module

Terminal number	Signal name
TB1	DA
TB2	DB
TB3	DG
TB4	SLD
TB5	+24 V
TB6	⏚ (FG)
TB7	24G

Pin number	Signal name	Pin number	Signal name
B20	X0	A20	X8
B19	X1	A19	X9
B18	X2	A18	XA
B17	X3	A17	XB
B16	X4	A16	XC
B15	X5	A15	XD
B14	X6	A14	XE
B13	X7	A13	XF
B12	COM	A12	COM
B11	Empty	A11	Empty
B10	Y10	A10	Y18
B9	Y11	A9	Y19
B8	Y12	A8	Y1A
B7	Y13	A7	Y1B
B6	Y14	A6	Y1C
B5	Y15	A5	Y1D
B4	Y16	A4	Y1E
B3	Y17	A3	Y1F
B2	COM-	A2	COM-
B1	CTL+	A1	CTL+

6 - 74

AbN
automation

6.5.2 AJ65VBTCF1-32DT1 combined module

Item \ Type			DC input transistor output combined module				Appearance
			AJ65VBTCF1-32DT1				
Input				Output			
Number of input points			16 points	Number of output points		16 points	
Isolation method			Photocoupler	Isolation method		Photocoupler	
Rated input voltage			24VDC (ripple ratio: within 5%)	Rated load voltage		12/24VDC (ripple ratio: within 5%)	
Rated input current			Approx. 5mA	Operating load voltage range		10.2 to 26.4VDC	
Operating voltage range			19.2 to 26.4VDC	Max. load current		0.1A/point, 1.6A/common	
Max. number of simultaneous input points			100% or 60% (Refer to Section 1.3.)	Max. inrush current		0.7A, 10ms or less	
ON voltage/ON current			15VDC or higher/3mA or higher	Leakage current at OFF		0.1mA or lower	
OFF voltage/OFF current			3VDC or lower/0.5mA or lower	Max. voltage drop at ON		0.1VDC or lower (TYP.) 0.1A, 0.2VDC or lower (MAX.) 0.1A	
Input resistance			Approx. 4.7kΩ				
Response time	OFF→ON		0.2ms or less (at 24VDC)	Output type		Sink type	
				Protection function		Overload protection, overvoltage protection, overheat protection	
	ON→OFF		0.2ms or less (at 24VDC)				
Wiring method for common			16 points/common (1-wire, FCN connector type)	Response time	OFF→ON	1ms or less	
					ON→OFF	1ms or less (rated load, resistive load)	
				External power supply for output part	Voltage	12/24VDC (ripple ratio: within 5%) (allowable voltage range: 10.2 to 26.4VDC)	
					Current	10mA or lower (at 24VDC and all points ON), excluding external load current	
Input type			Positive/negative common shared type (sink/source shared type)	Wiring method for common		16 points/common (1-wire, FCN connector type)	
				Surge suppressor		Zener diode	
Number of occupied stations			32-point assignment/station (32 points used)				
Module power supply	Voltage		24VDC (ripple ratio: within 5%) (allowable voltage range: 20.4 to 26.4VDC)				
	Current		50mA or lower (at 24VDC and all points ON)				
Noise immunity			Noise voltage 500Vp-p, noise width 1μs, noise frequency 25 to 60Hz (DC type noise simulator condition)				
Withstand voltage			500VAC for 1 minute between all DC external terminals and ground				
Insulation resistance			10MΩ or higher between all DC external terminals and ground (500VDC insulation resistance tester)				
Protection degree			IP1XB				
Weight			0.16kg				
External connection system	Communication part		One-touch connector for communication [Transmission circuit] 5-pin IDC plug is sold separately. <Optional> Online connector for communication: A6CON-LJ5P				
	Power supply part		One-touch connector for power supply and FG [Module power supply, FG] 5-pin IDC plug is sold separately: A6CON-PW5P, A6CON-PW5P-SOD <Optional> Online connector for power supply: A6CON-PWJ5P				
	I/O part		Connector for I/O (40 pins, M3 screw)				
Applicable DIN rail			TH35-7.5Fe, TH35-7.5Al (compliant with IEC 60715 and JIS C 2812)				
Applicable wire size	Connector for communication		Applicable cable: FANC-110SBH, FA-CBL200PSBH, CS-110				
	Connector for power supply and FG		0.66 to 0.98mm^2 (18 AWG) [ϕ2.2 to 3.0mm (A6CON-PW5P), ϕ2.0 to 2.3mm (A6CON-PW5P-SOD)] Wire diameter: 0.16mm or more Insulating coating material: PVC (heat-resistant)				
	Connector for I/O		• 0.08 to 0.3mm^2 (28 to 22 AWG) stranded wire (A6CON1 and A6CON4) *1 • 0.08 to 0.2mm^2 (28 to 24 AWG) stranded wire (A6CON2) • 0.08mm^2 (28 AWG) stranded wire, ϕ0.25mm (30 AWG) single wire (A6CON3)				
Applicable connector for I/O			A6CON1 (soldering type), A6CON2 (crimping type), A6CON3 (IDC type), A6CON4 (soldering type)				
Accessory			User's manual				

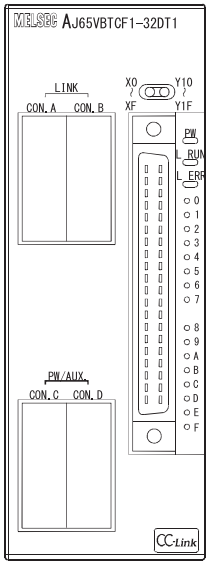

*1 Use cables with outside diameter of 1.3mm or shorter to connect 40 cables to the connector. In addition, consider the amount of current to be used and select appropriate cables.

6 - 75

External connection

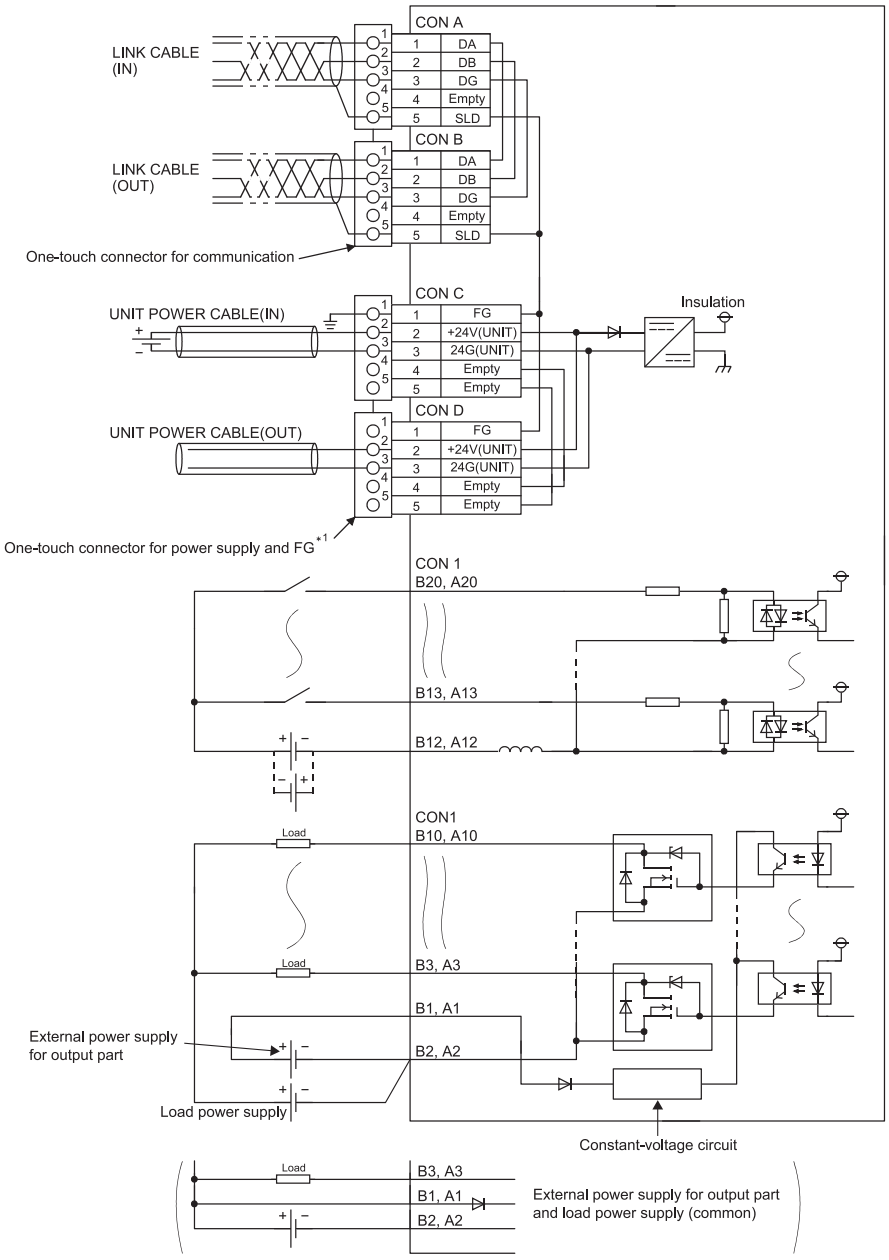

Pin layout

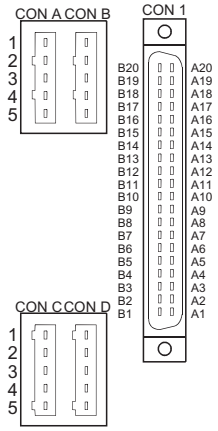

Viewed from the front of the module

Pin number		Signal name	Pin number		Signal name
CON A, B	1	DA			
	2	DB			
	3	DG			
	4	Empty			
	5	SLD			
CON 1-B	20	X0	CON 1-A	20	X8
	19	X1		19	X9
	18	X2		18	XA
	17	X3		17	XB
	16	X4		16	XC
	15	X5		15	XD
	14	X6		14	XE
	13	X7		13	XF
	12	COM		12	COM
	11	Empty		11	Empty
	10	Y10		10	Y18
	9	Y11		9	Y19
	8	Y12		8	Y1A
	7	Y13		7	Y1B
	6	Y14		6	Y1C
	5	Y15		5	Y1D
	4	Y16		4	Y1E
	3	Y17		3	Y1F
	2	COM-		2	COM-
	1	CTL+		1	CTL+
CON C-D	1	⏚ (FG)			
	2	+24V(UNIT)			
	3	24G(UNIT)			
	4	Empty			
	5	Empty			

* 1: Attach an unwired connector plug to an unused one-touch connector for power supply and FG.

6 - 76

AbN
automation

External connection

<When using online connectors>

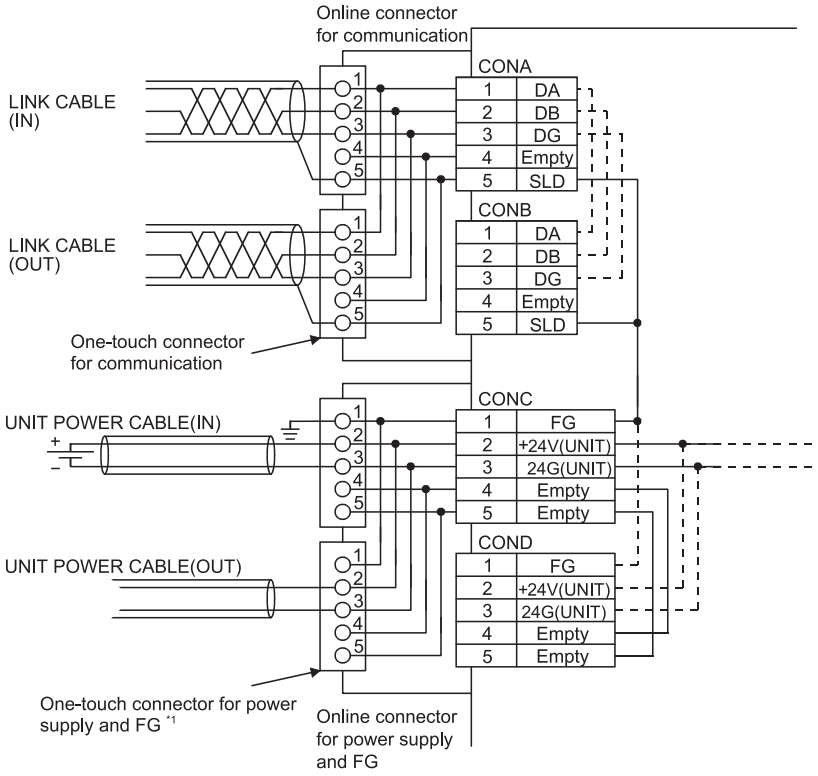

* 1: Attach an unwired connector plug to an unused one-touch connector for power supply and FG.

6 - 77

6.5.3 AJ65VBTCFJ1-32DT1 combined module

Item \ Type			DC input transistor output combined module				
			AJ65VBTCFJ1-32DT1				Appearance
Input				Output			
Number of input points			16 points	Number of output points		16 points	
Isolation method			Photocoupler	Isolation method		Photocoupler	
Rated input voltage			24VDC (ripple ratio: within 5%)	Rated load voltage		24VDC (ripple ratio: within 5%)	
Rated input current			Approx. 5mA	Operating load voltage range		Same as that for the module power supply	
Operating voltage range			Same as that for the module power supply	Max. load current		0.1A/point, 1.6A/common	
Max. number of simultaneous input points			100% or 40% (Refer to Section 1.3.)	Max. inrush current		0.7A, 10ms or less	
ON voltage/ON current			15VDC or higher/3mA or higher	Leakage current at OFF		0.1mA or lower	
OFF voltage/OFF current			3VDC or lower/0.5mA or lower	Max. voltage drop at ON		0.1VDC or lower (TYP.) 0.1A, 0.2VDC or lower (MAX.) 0.1A	
Input resistance			Approx. 4.7kΩ				
Response time	OFF→ON		0.2ms or less (at 24VDC)	Output type		Sink type	
	ON→OFF		0.2ms or less (at 24VDC)	Protection function		Overload protection, overvoltage protection, overheat protection	
Input type			Positive common (sink type)	Response time	OFF→ON	1ms or less	
					ON→OFF	1ms or less (rated load, resistive load)	
				External power supply for output part		Same as that for the module power supply	
				Surge suppressor		Zener diode	
Wiring method for common			32 points/common (1-wire, FCN connector type)				
Number of occupied stations			32-point assignment/station (32 points used)				
Module power supply	Voltage		24VDC (ripple ratio: within 5%) (allowable voltage range: 20.4 to 28.8VDC)				
	Current		50mA or lower (at 24VDC and all points ON), excluding external load current				
Noise immunity			Noise voltage 500Vp-p, noise width 1μs, noise frequency 25 to 60Hz (DC type noise simulator condition)				
Withstand voltage			500VAC for 1 minute between all DC external terminals and ground				
Insulation resistance			10MΩ or higher between all DC external terminals and ground (500VDC insulation resistance tester)				
Protection degree			IP1XB				
Weight			0.16kg				
External connection system	Communication part		One-touch connector for communication [Transmission circuit] 5-pin IDC plug is sold separately: A6CON-L5P <Optional> Online connector for communication: A6CON-LJ5P				
	Power supply part		One-touch connector for power supply and FG [Module power supply, FG] 5-pin IDC plug is sold separately: A6CON-PW5P, A6CON-PW5P-SOD <Optional> Online connector for power supply: A6CON-PWJ5P				
	I/O part		Connector for I/O (40 pins, M3 screw)				
Applicable DIN rail			TH35-7.5Fe, TH35-7.5Al (compliant with IEC 60715 and JIS C 2812)				
Applicable wire size	Connector for communication		Applicable cable: FANC-110SBH, FA-CBL200PSBH, CS-110				
	Connector for power supply and FG		0.66 to 0.98mm^2 (18 AWG) [ϕ2.2 to 3.0mm (A6CON-PW5P), ϕ2.0 to 2.3mm (A6CON-PW5P-SOD)] Wire diameter: 0.16mm or more Insulating coating material: PVC (heat-resistant)				
	Connector for I/O		• 0.08 to 0.3mm^2 (28 to 22 AWG) stranded wire (A6CON1 and A6CON4) *1 • 0.08 to 0.2mm^2 (28 to 24 AWG) stranded wire (A6CON2) • 0.08mm^2 (28 AWG) stranded wire, ϕ0.25mm (30 AWG) single wire (A6CON3)				
Applicable connector for I/O			A6CON1 (soldering type), A6CON2 (crimping type), A6CON3 (IDC type), A6CON4 (soldering type)				
Accessory			User's manual				

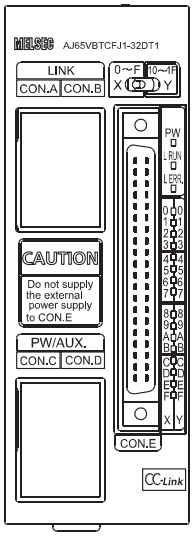

*1 Use cables with outside diameter of 1.3mm or shorter to connect 40 cables to the connector. In addition, consider the amount of current to be used and select appropriate cables.

AbN
automation

External connection

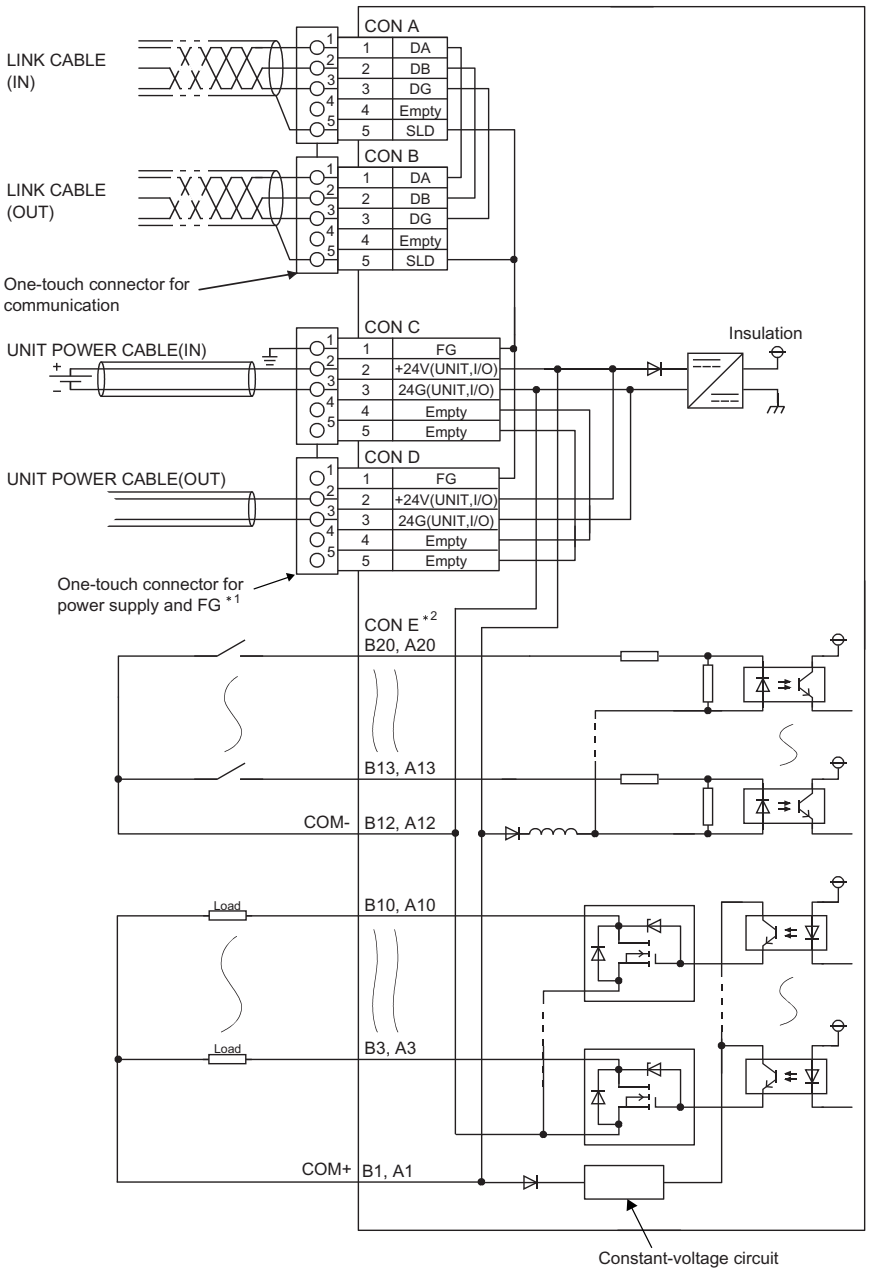

Pin layout

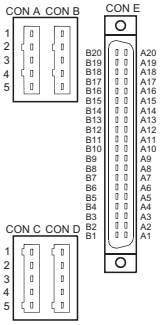

Viewed from the front of the module

Pin number		Signal name	Pin number		Signal name
CON A, B	1	DA			
	2	DB			
	3	DG			
	4	Empty			
	5	SLD			
CON E-B	20	X0	CON E-A	20	X8
	19	X1		19	X9
	18	X2		18	XA
	17	X3		17	XB
	16	X4		16	XC
	15	X5		15	XD
	14	X6		14	XE
	13	X7		13	XF
	12	COM-		12	COM-
	11	Empty		11	Empty
	10	Y10		10	Y18
	9	Y11		9	Y19
	8	Y12		8	Y1A
	7	Y13		7	Y1B
	6	Y14		6	Y1C
	5	Y15		5	Y1D
	4	Y16		4	Y1E
	3	Y17		3	Y1F
	2	Empty		2	Empty
	1	COM+		1	COM+
CON C-D	1	⏚ (FG)			
	2	+24V (UNIT, I/O)			
	3	24G (UNIT, I/O)			
	4	Empty			
	5	Empty			

* 1: Attach an unwired connector plug to an unused one-touch connector for power supply and FG.
* 2: Do not supply power to the CON E.

6 - 79

External connection

<When using online connectors>

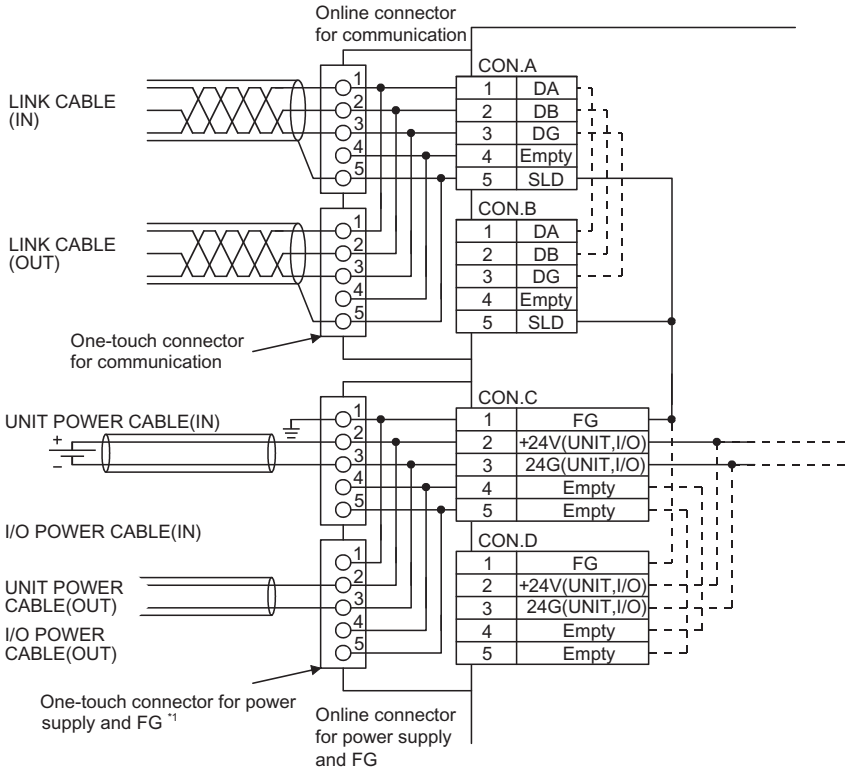

* 1: Attach an unwired connector plug to an unused one-touch connector for power supply and FG.

6 - 80

AbN
automation

6.6 Waterproof Type Combined Module

6.6.1 AJ65FBTA42-16DT combined module

Item \ Type		DC input transistor output combined module			
		AJ65FBTA42-16DT			Appearance
Input			Output		
Number of input points		8 points	Number of output points		8 points
Isolation method		Photocoupler	Isolation method		Photocoupler
Rated input voltage		24VDC (ripple ratio: within 5%)	Rated load voltage		24VDC (ripple ratio: within 5%)
Rated input current		Approx. 7mA	Operating load voltage range		20.4 to 26.4VDC
Operating voltage range		20.4 to 26.4VDC	Max. load current		0.5A/point, 2.4A/common
Max. number of simultaneous input points		100%	Max. inrush current		1.0A, 10ms or less
ON voltage/ON current		14VDC or higher/ 3.5mA or higher	Leakage current at OFF		0.25mA or lower
OFF voltage/OFF current		6VDC or lower/1.7mA or lower	Max. voltage drop at ON		0.15VDC or lower (TYP.) 0.5A, 0.25VDC or lower (MAX.) 0.5A
Input resistance		Approx. 3.3kΩ	Output type		Sink type
Response time	OFF→ON	1.5ms or less (at 24VDC)	Protection function		Overload protection, overheat protection
	ON→OFF	1.5ms or less (at 24VDC)			
			Response time	OFF→ON	0.5ms or less
				ON→OFF	1.5ms or less (resistive load)
			External power supply for output part	Voltage	24VDC (ripple ratio: within 5%) (allowable voltage range: 20.4 to 26.4VDC)
				Current	10mA or lower (at 24VDC and all points ON), excluding external load current
Input type		Positive common (sink type)	Surge suppressor		Zener diode
Supply current for connected device		1.0A or lower/common			
Wiring method for common		16 points/common (2- to 4-wire, waterproof connector type)			
Number of occupied stations		32-point assignment/station (16 points used)			
Module power supply	Voltage	24VDC (ripple ratio: within 5%) (allowable voltage range: 20.4 to 26.4VDC)			
	Current	50mA or lower (at 24VDC and all points ON)			
Noise immunity		Noise voltage 500Vp-p, noise width 1μs, noise frequency 25 to 60Hz (DC type noise simulator condition)			
Withstand voltage		500VAC for 1 minute between all DC external terminals and ground			
Insulation resistance		10MΩ or higher between all DC external terminals and ground (500VDC insulation resistance tester)			
Protection degree		IP67			
Weight		0.40kg			
Accessory		User's manual			
Optional item		Waterproof cap: A6CAP-WP2 (20 pieces)			
Other connecting devices		Refer to Section 1.6.1.			

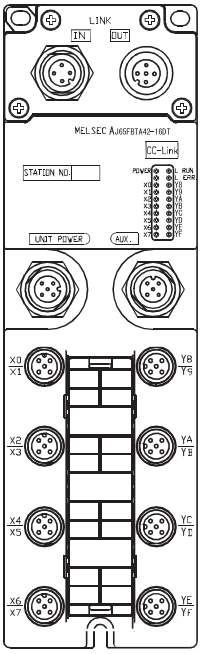

6 - 81

External connection

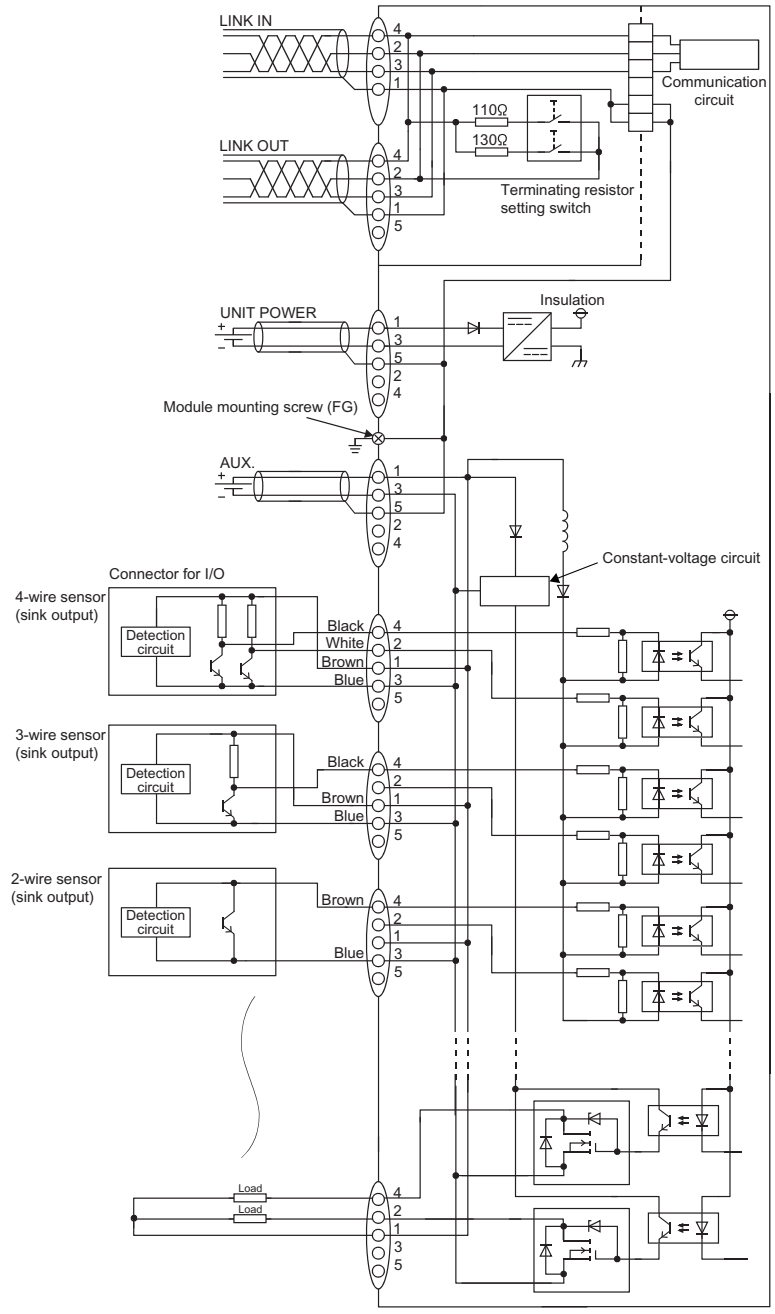

Pin layout

Viewed from the front of the module

Connector for communication

Pin number	LINK IN	LINK OUT
1	SLD	SLD
2	DB	DB
3	DG	DG
4	DA	DA
5	No pins	Empty

Connector for power supply

Pin number	UNIT POWER	AUX.
1	+24V(UNIT)	+24V(I/O)
2	Empty	Empty
3	24G(UNIT)	24G(I/O)
4	Empty	Empty
5	⏚ (FG)	⏚ (FG)

Connector for I/O

	Pin number	Signal name		Pin number	Signal name
X0/X1	1	+24V	Y8/Y9	1	+24V
	2	X1		2	Y9
	3	24G		3	Empty
	4	X0		4	Y8
	5	Empty		5	Empty
X2/X3	1	+24V	YA/YB	1	+24V
	2	X3		2	YB
	3	24G		3	Empty
	4	X2		4	YA
	5	Empty		5	Empty
X4/X5	1	+24V	YC/YD	1	+24V
	2	X5		2	YD
	3	24G		3	Empty
	4	X4		4	YC
	5	Empty		5	Empty
X6/X7	1	+24V	YE/YF	1	+24V
	2	X7		2	YF
	3	24G		3	Empty
	4	X6		4	YE
	5	Empty		5	Empty

6 - 82

AbN
automation

6.6.2 AJ65FBTA42-16DTE combined module

Item \ Type		DC input transistor output combined module			
		AJ65FBTA42-16DTE			Appearance
Input			Output		
Number of input points		8 points	Number of output points		8 points
Isolation method		Photocoupler	Isolation method		Photocoupler
Rated input voltage		24VDC (ripple ratio: within 5%)	Rated load voltage		24VDC (ripple ratio: within 5%)
Rated input current		Approx. 7mA	Operating load voltage range		20.4 to 26.4VDC
Operating voltage range		20.4 to 26.4VDC	Max. load current		1.0A/point, 4A/common
Max. number of simultaneous input points		100%	Max. inrush current		2.0A, 10ms or less
ON voltage/ON current		14VDC or higher/ 3.5mA or higher	Leakage current at OFF		0.3mA or lower
OFF voltage/OFF current		6VDC or lower/1.7mA or lower	Max. voltage drop at ON		0.15VDC or lower (TYP.) 1.0A, 0.2VDC or lower (MAX.) 1.0A
Input resistance		Approx. 3.3kΩ			
Response time	OFF→ON	1.5ms or less (at 24VDC)	Response time	OFF→ON	0.5ms or less
	ON→OFF	1.5ms or less (at 24VDC)		ON→OFF	1.5ms or less (resistive load)
			Output type		Source type
			Protection function		Overload protection, overheat protection (The LED turns on when any protection is activated.)
			External power supply for output part	Voltage	24VDC (ripple ratio: within 5%) (allowable voltage range: 20.4 to 26.4VDC)
				Current	15mA or lower (at 24VDC and all points ON), excluding external load current
Input type		Negative common (source type)	Surge suppressor		Zener diode
Supply current for connected device		1.0A or lower/common			
Wiring method for common		16 points/common (input: 2- to 4-wire waterproof connector type, output: 2-wire waterproof connector type)			
Number of occupied stations		32-point assignment/station (16 points used)			
Module power supply	Voltage	24VDC (ripple ratio: within 5%) (allowable voltage range: 20.4 to 26.4VDC)			
	Current	45mA or lower (at 24VDC and all points ON)			
Noise immunity		Noise voltage 500Vp-p, noise width 1μs, noise frequency 25 to 60Hz (DC type noise simulator condition)			
Withstand voltage		500VAC for 1 minute between all DC external terminals and ground			
Insulation resistance		10MΩ or higher between all DC external terminals and ground (500VDC insulation resistance tester)			
Protection degree		IP67			
Weight		0.40kg			
Accessory		User's manual			
Optional item		Waterproof cap: A6CAP-WP2 (20 pieces)			
Other connecting devices		Refer to Section 1.6.1.			

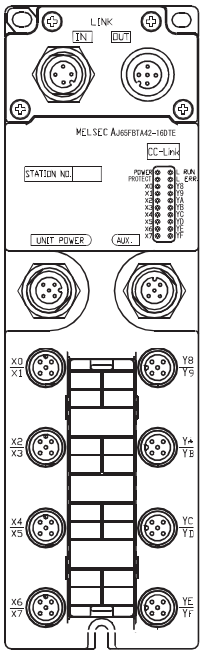

6 - 83

External connection

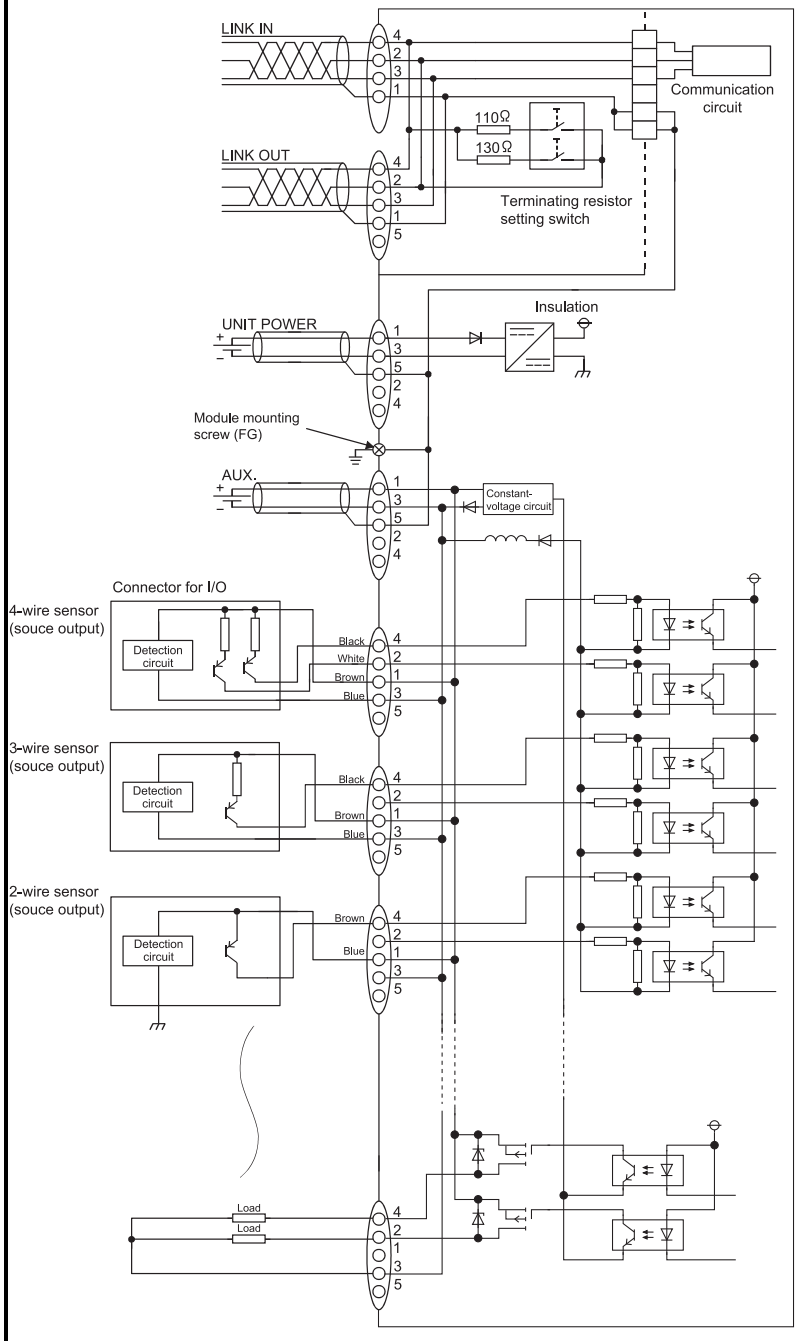

Pin layout

Viewed from the front of the module

Connector for communication

Pin number	LINK IN	LINK OUT
1	SLD	SLD
2	DB	DB
3	DG	DG
4	DA	DA
5	No pins	Empty

Connector for power supply

Pin number	UNIT POWER	AUX.
1	+24V(UNIT)	+24V(I/O)
2	Empty	Empty
3	24G(UNIT)	24G(I/O)
4	Empty	Empty
5	⏚ (FG)	⏚ (FG)

Connector for I/O

	Pin number	Signal name		Pin number	Signal name
X0/X1	1	+24V	Y8/Y9	1	Empty
	2	X1		2	Y9
	3	24G		3	24G
	4	X0		4	Y8
	5	Empty		5	Empty
X2/X3	1	+24V	YA/YB	1	Empty
	2	X3		2	YB
	3	24G		3	24G
	4	X2		4	YA
	5	Empty		5	Empty
X4/X5	1	+24V	YC/YD	1	Empty
	2	X5		2	YD
	3	24G		3	24G
	4	X4		4	YC
	5	Empty		5	Empty
X6/X7	1	+24V	YE/YF	1	Empty
	2	X7		2	YF
	3	24G		3	24G
	4	X6		4	YE
	5	Empty		5	Empty

6 - 84

AbN
automation

6.6.3 AJ65SBTW4-16DT combined module

Item \ Type		DC input transistor output combined module			
		AJ65SBTW4-16DT			Appearance
Input			Output		
Number of input points		8 points	Number of output points		8 points
Isolation method		Photocoupler	Isolation method		Photocoupler
Rated input voltage		24VDC (ripple ratio: within 5%)	Rated load voltage		24VDC (ripple ratio: within 5%)
Rated input current		Approx. 5mA	Operating load voltage range		20.4 to 26.4VDC
Operating voltage range		20.4 to 26.4VDC	Max. load current		0.5A/point, 2.4A/common
Max. number of simultaneous input points		100%	Max. inrush current		1.0A, 10ms or less
ON voltage/ON current		14VDC or higher/ 3.5mA or higher	Leakage current at OFF		0.25mA or lower
OFF voltage/OFF current		6VDC or lower/ 1mA or lower	Max. voltage drop at ON		0.3VDC or lower (TYP.) 0.5A, 0.6VDC or lower (MAX.) 0.5A
Input resistance		Approx. 4.7kΩ	Output type		Sink type
Response time	OFF→ON	1.5ms or less (at 24VDC)	Protection function		Overload protection, overvoltage protection, overheat protection
	ON→OFF	1.5ms or less (at 24VDC)			
			Response time	OFF→ON	0.5ms or less
				ON→OFF	1.5ms or less (resistive load)
			External power supply for output part	Voltage	24VDC (ripple ratio: within 5%) (allowable voltage range: 20.4 to 26.4VDC)
				Current	13mA or lower (at 24VDC and all points ON), excluding external load current
Input type		Positive common (sink type)	Surge suppressor		Zener diode
Wiring method for common		16 points/common (4-wire, waterproof connector type) Same as that for the module power supply			
Number of occupied stations		32-point assignment/station (16 points used)			
Module power supply	Voltage	24VDC (ripple ratio: within 5%) (allowable voltage range: 20.4 to 26.4VDC)			
	Current	50mA or lower (at 24VDC and all points ON)			
Noise immunity		Noise voltage 500Vp-p, noise width 1μs, noise frequency 25 to 60Hz (DC type noise simulator condition)			
Withstand voltage		500VAC for 1 minute between all DC external terminals and ground			
Insulation resistance		10MΩ or higher between all DC external terminals and ground (500VDC insulation resistance tester)			
Protection degree		IP67			
Weight		0.70kg			
External connection system		7-point two-piece terminal block [Transmission circuit, module power supply, FG] M3×5.2 screw (tightening torque range: 0.59 to 0.88N•m), Waterproof connector [compliant with IEC 60947-5-2, M12, male, 4 pins, IP67] (connector for I/O part) <Optional> Dustproof cap: A6CAP-DC1 (20 pieces), waterproof cap: A6CAP-WP1 (20 pieces)			
Applicable wire size	Transmission circuit, module power supply part	Applicable cable size: ϕ5.0 to 8.0 mm • RAV1.25-3 (compliant with JIS C 2805) [Applicable wire size: 0.3 to 1.25mm^2] • V2-MS3, RAP2-3SL, TGV2-3N [Applicable wire size: 1.25 to 2.0mm^2 (16 to 14 AWG) stranded wire]			
	Connector for I/O	–			
Tightening torque range	Module top-cover mounting screw (M3)	0.54 to 0.64N•m			
	Module front-cover mounting screw (M3)	0.54 to 0.64N•m			
	Module mounting screw (M4 with plain washer finished round)	1.27 to 1.47N•m			
	Nut for pipe	0.99 to 1.48N•m			
Through pipe specifications		Applicable cable size: ϕ5.0 to 8.0 mm			
Accessory		User's manual, Waterproof plug (2 pieces)			

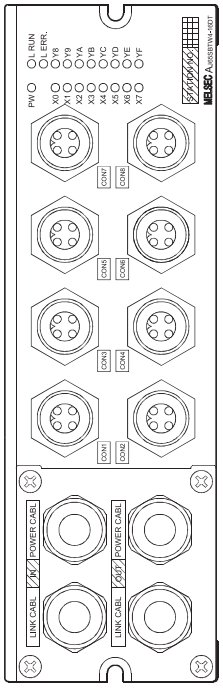

6 - 85

External connection

<Connection example of 4-, 3-, and 2-wire sensors>

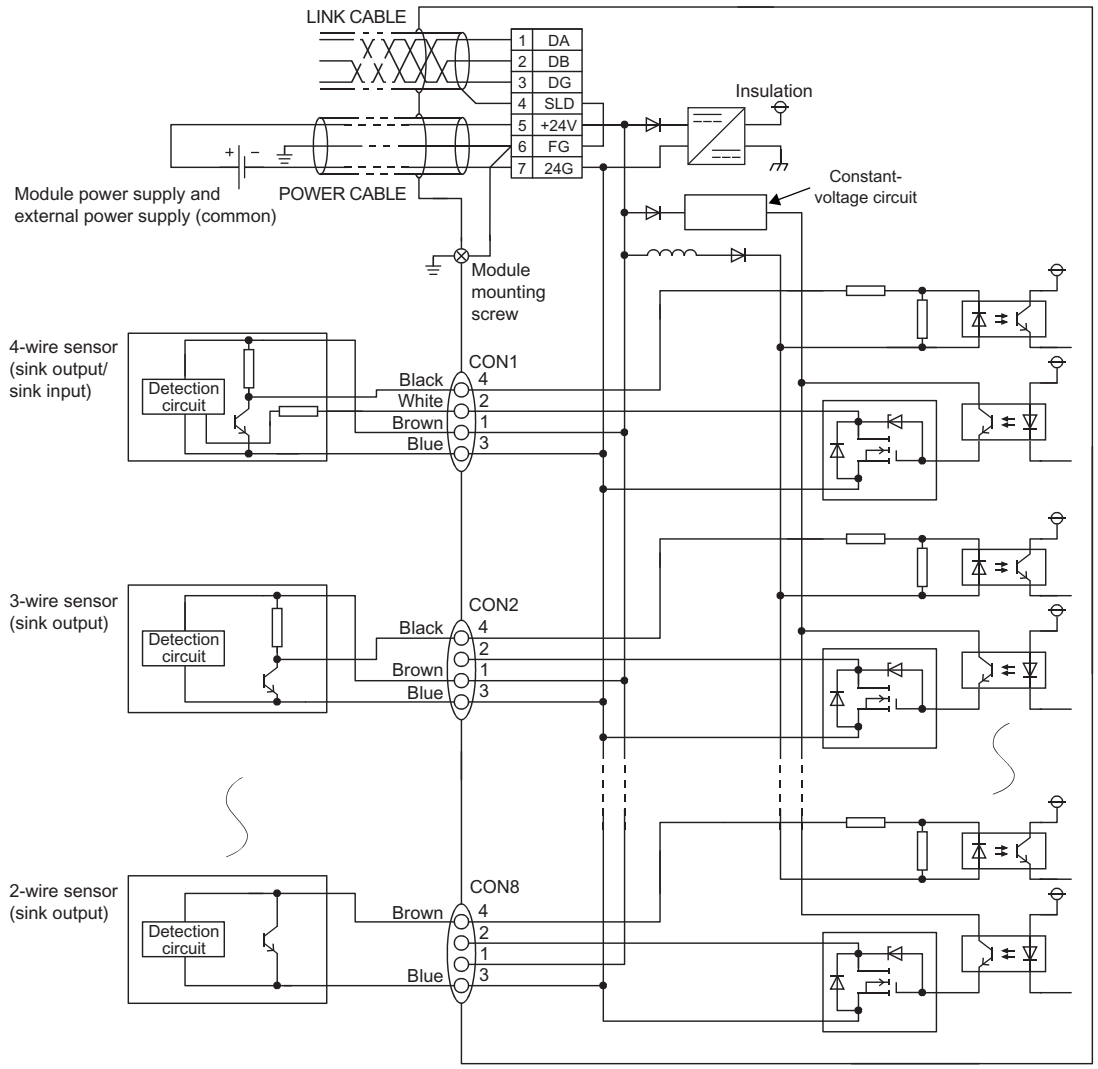

Terminal number	Signal name
TB1	DA
TB2	DB
TB3	DG
TB4	SLD
TB5	+24V
TB6	⏚ (FG)
TB7	24G

	Pin number	Signal name
CON1	1	+24V
	2	Y8
	3	24G
	4	X0
CON2	1	+24V
	2	Y9
	3	24G
	4	X1
CON3	1	+24V
	2	YA
	3	24G
	4	X2
CON4	1	+24V
	2	YB
	3	24G
	4	X3
CON5	1	+24V
	2	YC
	3	24G
	4	X4
CON6	1	+24V
	2	YD
	3	24G
	4	X5
CON7	1	+24V
	2	YE
	3	24G
	4	X6
CON8	1	+24V
	2	YF
	3	24G
	4	X7

6 - 86

AbN
automation

External connection

<Connection example of other I/O devices>

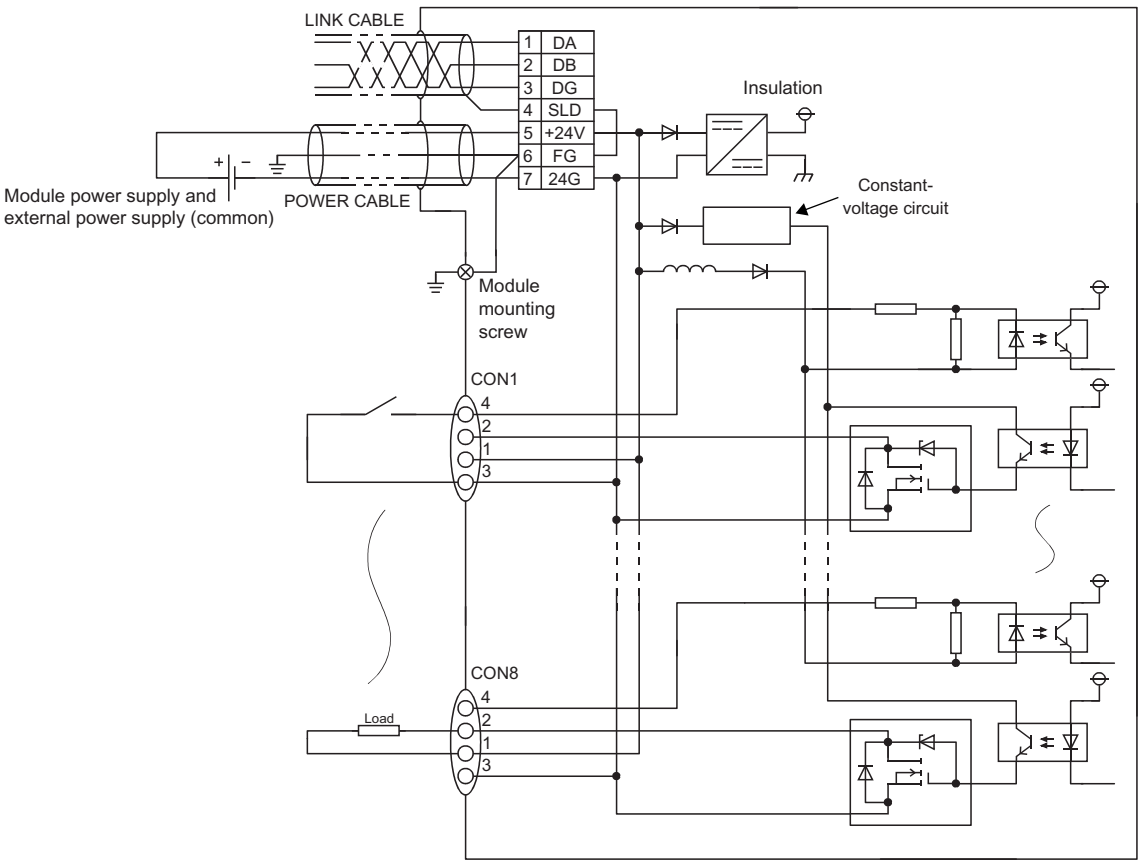

Pin layout

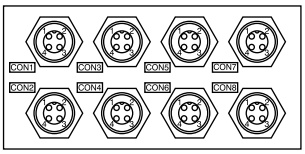

Viewed from the front of the module

6 - 87

7 HANDLING OF COMPACT REMOTE I/O MODULES

7.1 Handling and Installation Precautions

This section lists the precautions for handling and installing the compact remote I/O module for the CC-Link system.

⚠WARNING

- Do not touch any terminal or connector while power is on.
  Doing so will cause electric shock.

⚠CAUTION

- Prevent foreign matter such as dust or wire chips from entering the module.
  Such foreign matter can cause a fire, failure, or malfunction.
- Do not disassemble or modify the module.
  Doing so may cause failure, malfunction, injury, or a fire.
- Do not directly touch any conductive part of the module.
  Doing so can cause malfunction or failure of the module.
- Do not drop or apply any strong shock to the module. Doing so may damage the module.
- Use applicable solderless terminals and tighten them within the specified torque range. If any spade solderless terminal is used, it may be disconnected when the terminal screw comes loose, resulting in failure.
- Tighten the terminal screw within the specified torque range.
  Undertightening can cause fire or malfunction.
  Overtightening can damage the screw, resulting in short circuit or malfunction.
- When disposing of this product, treat it as industrial waste.
- Use the module in an environment that meets the general specifications in this manual.
  Failure to do so may result in electric shock, fire, malfunction, or damage to or deterioration of the product.
- Securely fix the module with a DIN rail or mounting screws. Tighten the screws within the specified torque range.
  Undertightening can cause drop of the screw, short circuit or malfunction.
  Overtightening can damage the screw, resulting in drop or short circuit.
- Shut off the external power supply (all phases) used in the system before mounting or removing a module to/from a control panel.
  Failure to do so may cause the module to fail or malfunction.

(1) Tighten the module mounting screw or terminal block screw within the following torque range. Overtightening can damage the module case.

(a) Terminal block type, one-touch connector type, or FCN connector type

Screw	Tightening torque range
Module mounting screw (M4 screw with plain washer finished round)	0.78 to 1.08N·m
Terminal block screw (M3)	0.59 to 0.88N·m
Terminal block installation screw (M3.5)	0.68 to 0.98N·m

(b) Waterproof type (AJ65SBTW□-16□)

Screw	Tightening torque range
Module top cover mounting screw (M3)	0.54 to 0.64N·m
Module front cover mounting screw (M3)	0.54 to 0.64N·m
Nut for pipe	0.99 to 1.48N·m
Module mounting screw (M4 screw with plain washer finished round)	1.27 to 1.47N·m
Terminal block screw (M3)	0.59 to 0.88N·m
Terminal block installation screw (M3.5)	0.68 to 0.98N·m

AbN
automation

(c) Low profile waterproof type (AJ65FBTA□-16□)

Screw	Tightening torque range
Communication adapter mounting screw (M4)	0.42 to 0.58N·m
Module mounting screw (M4)	0.78 to 1.18N·m
Waterproof cap (A6CAP-WP2)	0.29 to 0.34N·m

(d) Spring clamp terminal block type or sensor connector (e-CON) type

Screw	Tightening torque range
Mounting bracket (M4)	0.82 to 1.11N·m

POINT

- For a terminal and a screw, avoid adhering to oil.
  Doing so may damage the screw.
- When using two solderless terminals, place them with their backs faced.
  If not, a screw cannot be full inserted, resulting in damage to the screw.
- Tighten the terminal screw with an applicable driver.
  Failure to do so may damage the screw.

(2) A scratch-resistant film is attached on the surface of the module during transportation.
Remove the film before operation.

7 - 2

(3) Observe the following points when installing a module to a control panel using a DIN rail.

(a) Applicable DIN rail (compliant with IEC 60715 and JIS C 2812)
TH35-7.5Fe
TH35-7.5Al

(b) Mounting pitch
When installing a DIN rail to a control panel, keep mounting pitches 200mm or less.

(c) Area where screws cannot used for Din rail installation
When installing the AJ65VBTCE□-16□ and AJ65VBTCE□-32□ to the DIN rail horizontally as shown below, tighten a screw so that a certain distance will be ensured between the screw and the DIN rail hook on the right side of module.
Failure to do so may cause the screw to interfere with the DIN rail hook.

1) For AJ65VBTCE□-16□
Tighten a screw keeping a distance of 50mm or more from the DIN rail hook on the right side of module.

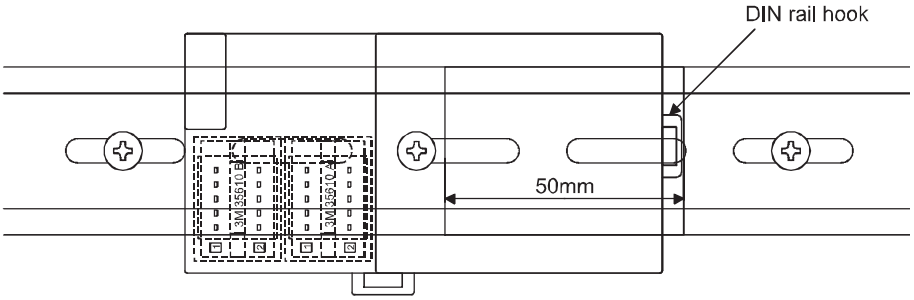

7 - 3

AbN
automation

2) For AJ65VBTCE□-32□
Tighten a screw keeping a distance of 80mm or more from the DIN rail hook on the right side of module.

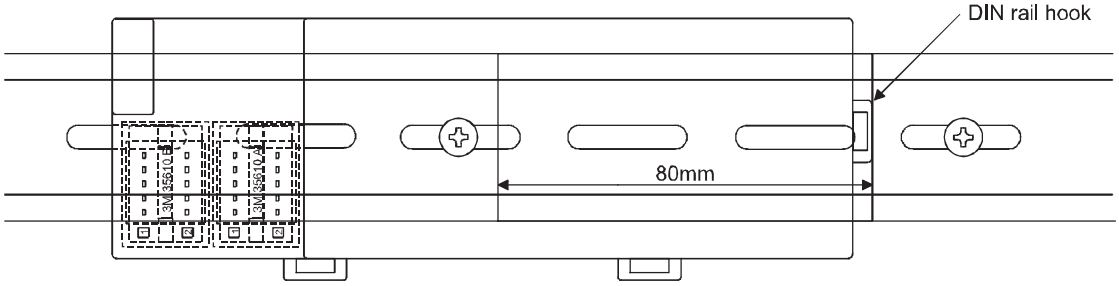

(4) When mounting the compact remote I/O module to a DIN rail, push in the DIN rail hook located at the bottom of the module until it clicks.

For AJ65SBTB1-8 □, AJ65SBTB1-16 □, AJ65SBTC4-16 □, AJ65SBTC1-32 □, AJ65SBTCF1-32 □, AJ65SBTB2-8 □, AJ65SBTB2N-8 □, AJ65SBTB32-8 □, AJ65VBTS □ -16□, AJ65VBTCE □ -8 □, AJ65VBTCE □ -16 □
compact remote I/O modules

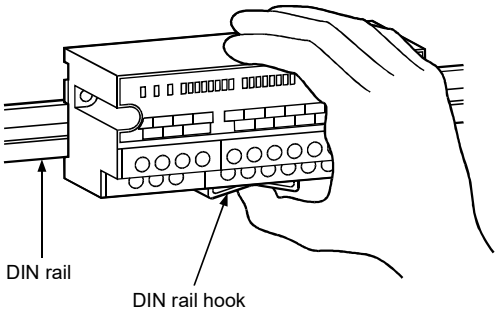

For AJ65SBTB1B-16 □, AJ65SBTB1-32 □, AJ65SBTB2-16 □, AJ65SBTB2N-16□, AJ65SBTB3-16□, AJ65SBTB32-16□, AJ65VBTS□-32□, AJ65VBTCE□-32□
compact remote I/O modules

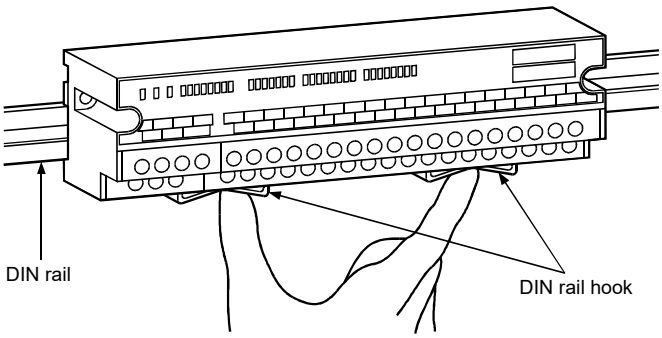

Note: Do not touch the board as described below. It may result in failure.

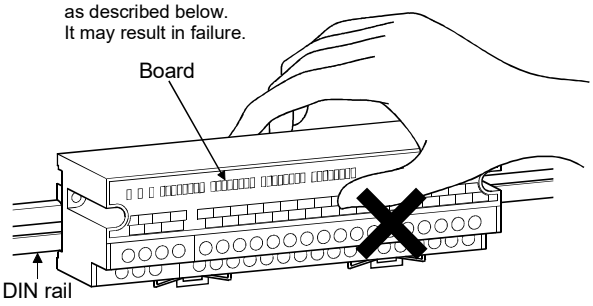

7 - 4

(5) When mounting the compact remote I/O module on the DIN rail, put its upper hook onto the fixing bracket and push the module until it clicks.

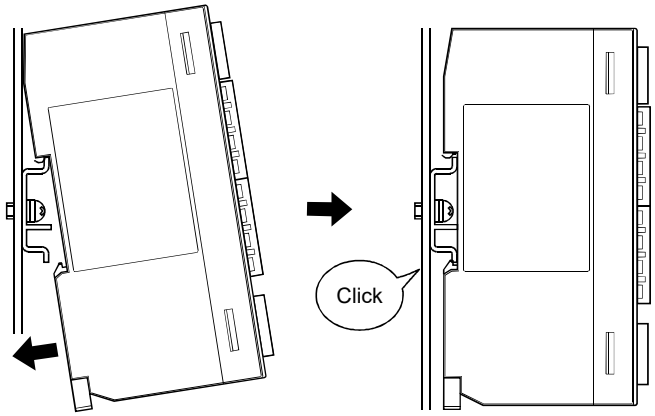

[Mounting dimensions]

(a) A6PLT-J65V1 (For module width 41mm only)

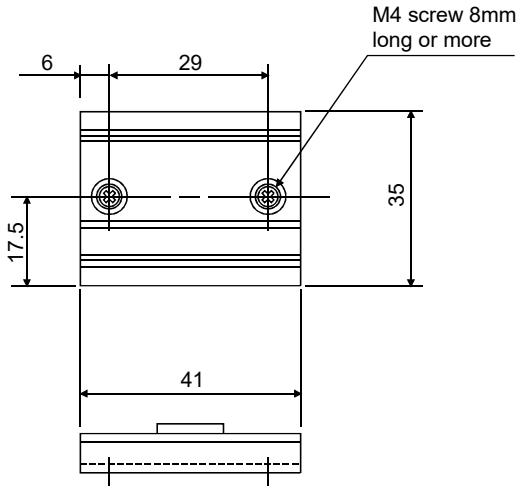

(b) A6PLT-J65V2 (For module width 60mm only)

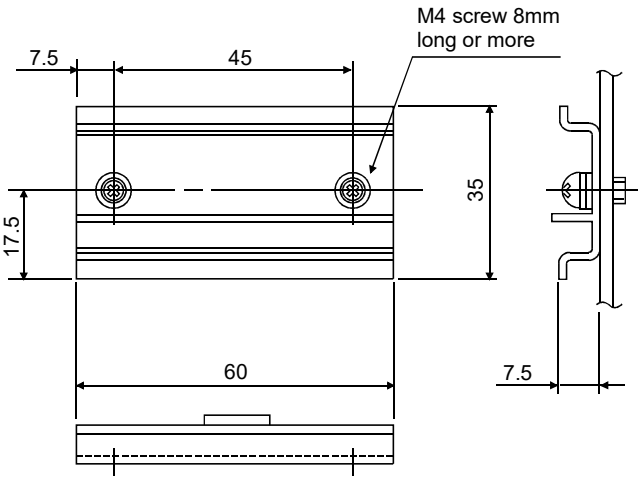

Unit : mm

(6) Do not install the compact remote I/O module to the place where:
- (a) an ambient temperature is outside the range of 0 to 55°C (0 to 45°C for the waterproof remote I/O module),
- (b) ambient humidity is outside the range of 10 to 99%RH,
- (c) condensation occurs due to a sudden temperature change,
- (d) corrosive gas or combustible gas is present,
- (e) conductive powder (such as dust and iron powder), oil mist, salinity, or organic solvent is filled,
- (f) the module is exposed to direct sunlight,
- (g) a strong electric field or strong magnetic field is generated, and
- (h) the module is subject to vibration or shock.

AbN
automation

(7) When installing the compact remote I/O module into a panel, etc., provide 60mm or more of space between the top and bottom of the module and other structures or parts so that good ventilation and ease of operation when exchanging modules can be secured.

(8) Install the compact remote I/O module on a level surface.
If the surface is uneven, unnecessary force is applied to the printed circuit board, causing malfunction.

(9) When installing the waterproof-type remote I/O module, provide the space shown in the figure below between the top and bottom of the module and other structures or parts so that good ventilation can be secured and that interference and application of load on the waterproof connector can be prevented.
When connecting two modules in parallel, secure 7mm or more space between them.

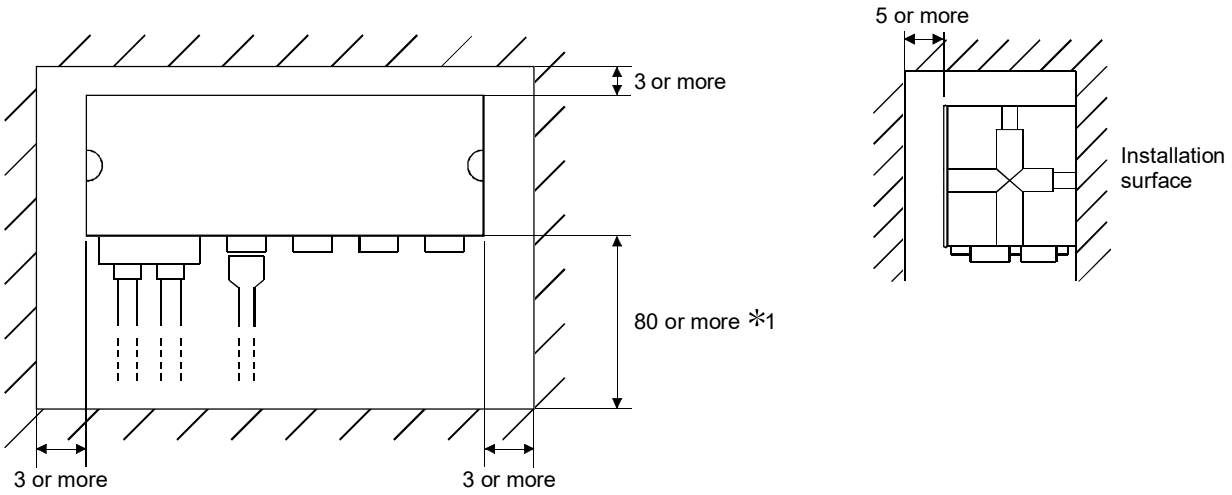

*1 Provide a space so that no load is applied to the cable (the space differs depending on the waterproof connector used).

<When two modules are installed in parallel>

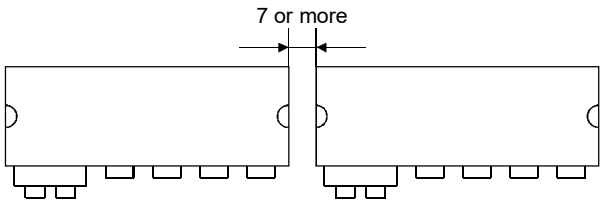

Unit : mm

7 - 6

(10) If a waterproof cap is being installed on the low profile waterproof type remote I/O module, in order to improve ventilation and also to prevent interference, as well as to prevent a load from bearing on the waterproof connector, all the distances shown in the following figures between the module's side surfaces and the structure or parts.

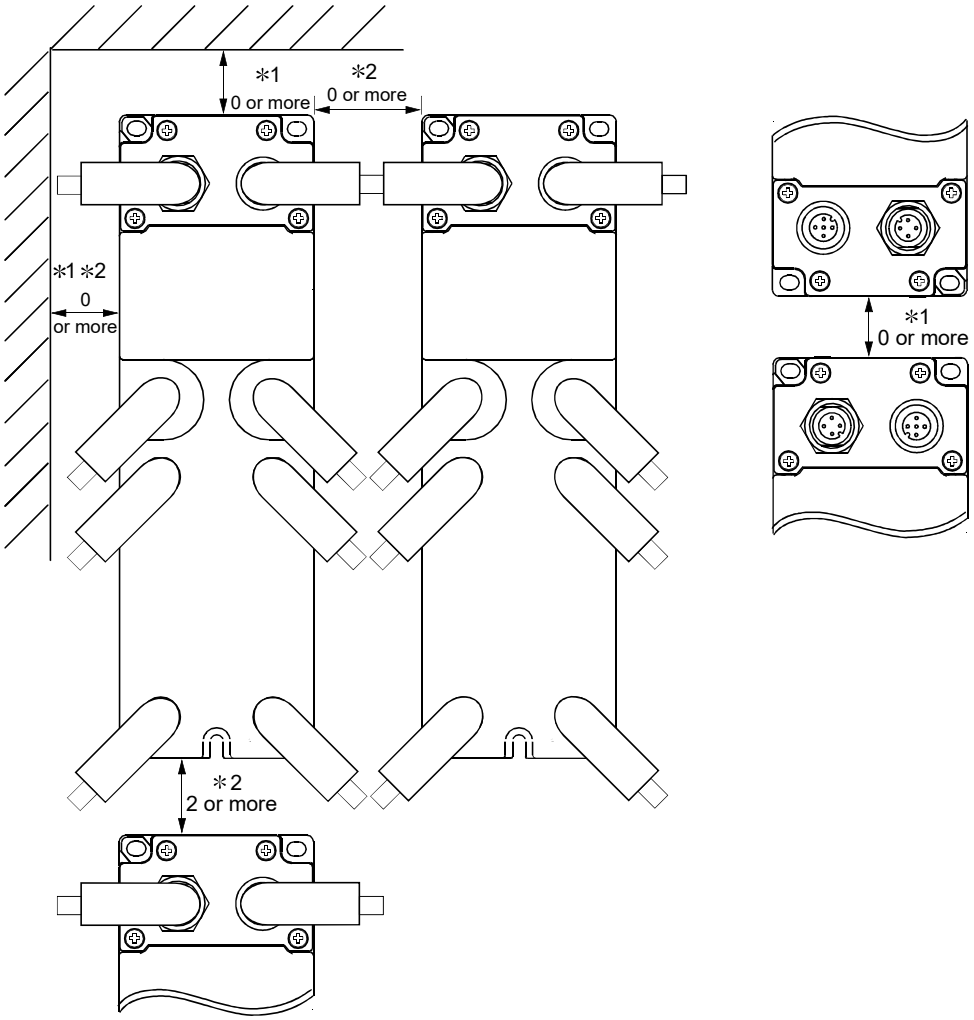

∗1 If you disconnect and connect the communications adapter, set the operating distance using a screwdriver, etc.

∗2 If you are using a right angle type waterproof plug or Y branch connector, set a distance where no load will be brought to bear on the cable.

AbN
automation

(11) When installing the sensor connector (e-CON) type modules in parallel, take intervals between the modules as shown below.
(The interval is required for the size of a DIN rail hook or mounting brackets.)

Installation method of the module	Installation orientation of the module	Interval*3
Using a DIN rail*1	Basic, Upside down (vertical installation)	5mm
	Basic, Upside down (horizontal installation)	5mm
Using screws*2	Basic, Upside down (vertical installation)	5mm
	Basic, Upside down (horizontal installation)	15mm

* 1 This is the case when a DIN rail is installed horizontally. Do not apply this interval to the AJ65VBTCE□-8□.

* 2 This is the case when mounting brackets are attached on the top and bottom sides of the module. If the brackets are attached on the right and left sides of the module, apply the intervals reversely. (The interval for the vertical installation is 15mm and the interval for the horizontal installation is 5mm.)

* 3 The interval indicates the distance from the modules that are installed on the either side.

(12) When handling the DIP switch, observe the following:

(a) Use a compact driver.

Do not handle the DIP switch with a mechanical pencil or a sharp, such as a pair of tweezers and a needle.

If the lead or lead powder of a mechanical pencil enters into the switch, a failure may result. Or if it drops into a circuit board, an electrical problem may result.

Using a sharp may damage the switch, resulting in failure.

(b) Slide the switch lever one by one horizontally to the intended direction.

If the driver pushes the switch lever at an angle or from the right above, the switch may be damaged or transformed due to the pressing load.

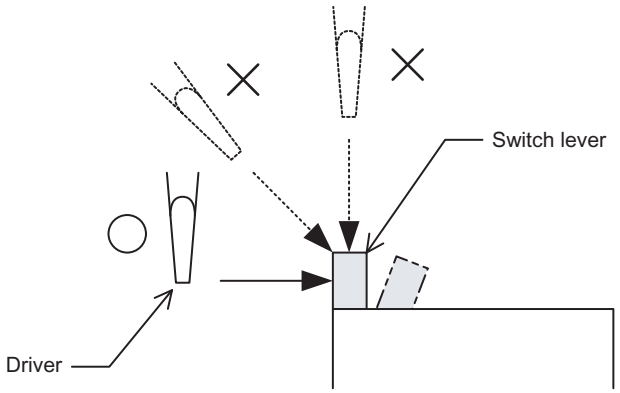

(c) Set the station number setting switch, transmission speed setting switch, or input response speed switch while the compact remote I/O module is turned off, as the settings are applied when the module is powered on.

(d) If the module has a switch cover, close it after completing the DIP switch operation to prevent unintended contact with the switches and to keep out dirt and dust.

AbN
automation

7.2 Wiring Procedures for One-touch Connector Plugs

7.2.1 List of one-touch connector plugs

The following table lists one-touch connector plugs applicable to the CC-Link system compact remote I/O module.

Product name	Mitsubishi Electric product model name	Part model name	Specifications				Color of the cover
			Applicable cable size (core)		Applicable cable size (diameter)	Maximum rated current	
One-touch connector plug ∗1, ∗4	A6CON-P214	33104-6000FL ∗5	0.14 to 0.2mm^2 (26 to 24 AWG)		ϕ1.0 to 1.4mm	2A∗7	Transparent
	A6CON-P220	33104-6100FL ∗5			ϕ1.4 to 2.0mm		Yellow
	A6CON-P514	33104-6200FL ∗5	0.3 to 0.5mm^2 (22 to 20 AWG)		ϕ1.0 to 1.4mm	3A∗7	Red
	A6CON-P520	33104-6300FL ∗5			ϕ1.4 to 2.0mm		Blue
One-touch connector plug for communication ∗2, ∗4	A6CON-L5P	35505-6000-B0M GF∗5	Communication line 0.5mm^2 (20 AWG)		ϕ2.2 to 3.0mm		Red
			Shielded cable 0.5mm^2 (20 AWG)				
One-touch connector plug for power supply and FG ∗2, ∗4, ∗6	A6CON-PW5P	35505-6080-A00 GF∗5	0.75mm^2 (0.66 to 0.98mm^2) (18 AWG) Wire diameter: 0.16mm or more Insulating coating material: PVC (heat-resistant)		ϕ2.2 to 3.0mm	7A∗7	Gray
	A6CON-PW5P-SOD	35505-6180-A00 GF∗5			ϕ2.0 to 2.3mm		Blue
Online connector for communication ∗3	A6CON-LJ5P	35720-L200-B00 AK∗5	—	—	—	—	—
Online connector for power supply and FG ∗3	A6CON-PWJ5P	35720-L200-A00 AK∗5	—	—	—	—	—

∗1 The A6CON-P□□□ (manufactured by Mitsubishi Electric) is available in packs of 20 pieces.
∗2 The A6CON-□5P (manufactured by Mitsubishi Electric) is available in packs of 10 pieces.
∗3 The A6CON-□J5P (manufactured by Mitsubishi Electric) is available in packs of 5 pieces.
∗4 One-touch connector plugs can no longer be used once crimped.
∗5 The manufacturer is 3M Japan Limited.
∗6 Check the outside diameter of an applicable cable and select a connector.
∗7 Keep the current within the allowable range of the connected cable.

7 - 10

7.2.2 Precautions for transition wiring of one-touch connector for power supply and FG

Current flows in the modules when they are transition wired through one-touch connectors for power supply and FG. Design the system so that the current flows in each module equals to or lower than the maximum rated current shown below.

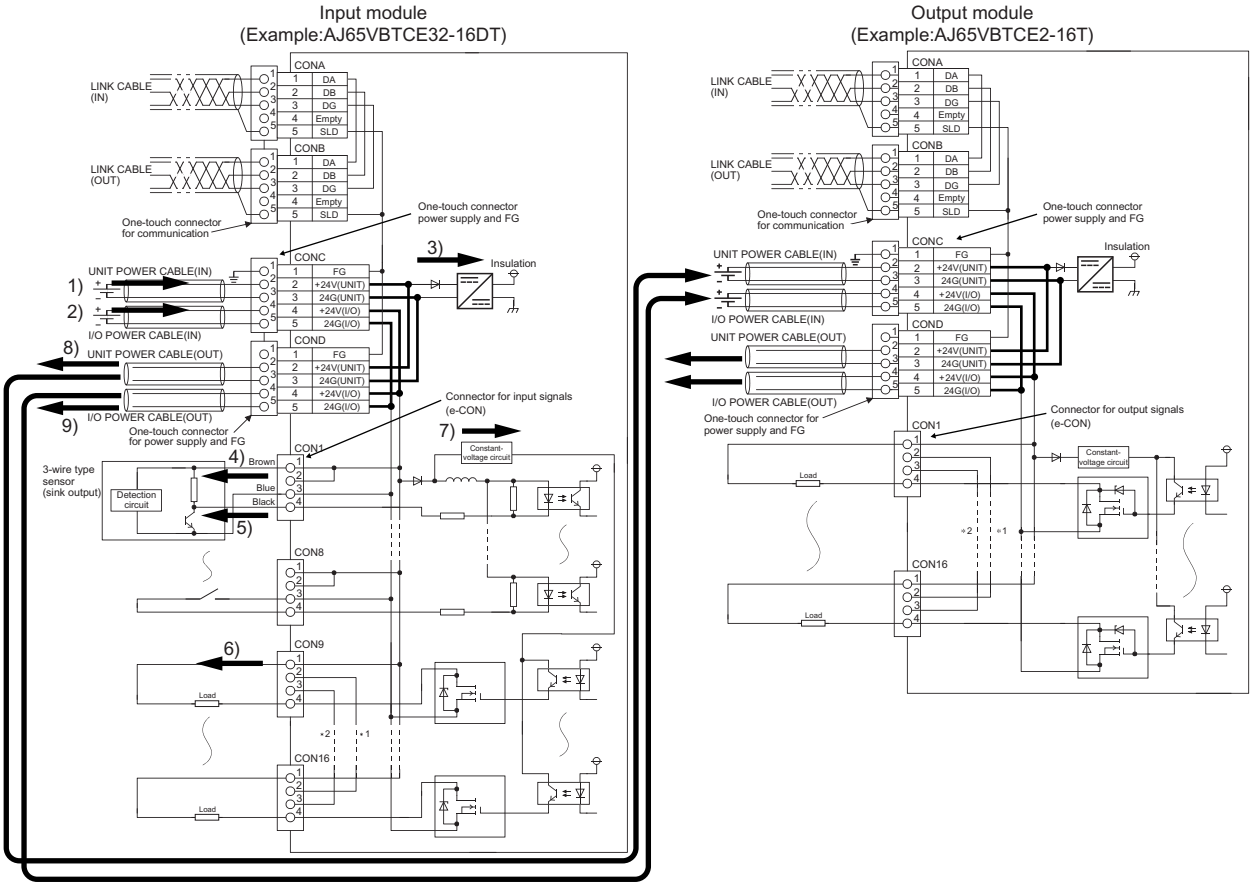

No.	Power port	Connector	Maximum rated current
1)	Module power supply (IN)	One-touch connector for power supply and FG (No.2 and 3 pins of CONC)	7A*1
2)	I/O power supply (IN)	One-touch connector for power supply and FG (No.4 and 5 pins of CONC)	7A*1

No.	Power supply	Power port (source)	Description	Maximum current consumption
3)	Module power supply	Module power supply (IN)	Power supply for CC-Link modules	Module power supply
4)	Power supply for input device	I/O power supply (IN)	Power supply for input devices connected, such as sensors	Supply current for connected device
5)	Input current		Input signals from input devices	Rated input current
6)	External load power supply		Power supply that is consumed by the load	Maximum load current
7)	External power supply for output part		Power supply for output circuits	External power supply for output part current
8)	Module power supply (OUT)	Module power supply (IN)	Power supply for the modules and external devices connected by transition wiring	Depends on the modules and external devices connected
9)	I/O power supply (OUT)	I/O power supply (IN)	Power supply for the modules and external devices connected by transition wiring	

*1 The value of 1) equals to the sum of 3) and 8). The value of 2) equals to the sum of 4), 5), 6), 7), and 9). Design the system so that each value of 1) and 2) equals to or lower than the maximum rated current (7A).

7 - 11

AbN
automation

7.2.3 Wiring procedures for the one-touch connector

This section describes the wiring procedures for the one-touch connector of the one-touch connector type or connector type compact remote I/O module.

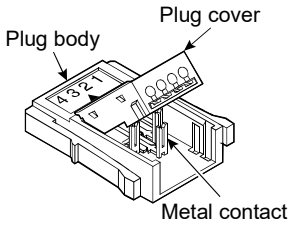

↓

1) Check the connector.
Check that a plug cover is attached to the plug.

Note: Do not press the plug cover firmly into the plug before a cable is inserted.
Once crimped, the plug can no longer be used.

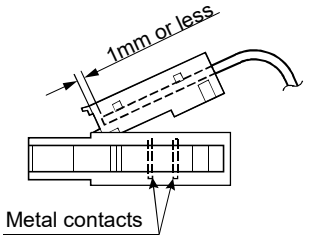

↓

2) Insert a cable. (＊1)
Lift the end of the plug cover and insert a cable until it reaches the other end of the cover (within 1mm from the other end).
Failure to do so may cause an improper crimping.

Note: When inserting the cable, prevent the cable from sticking out from the plug cover end.

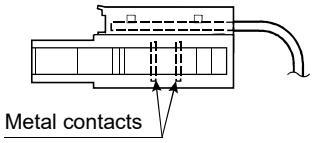

↓

3) Set the plug cover.
After the cable is inserted, put down the plug cover and set it to the position where the metal contacts fit into the cover.

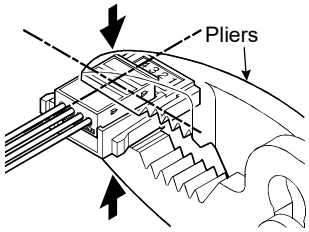

↓

4) Crimp the plug cover into the plug.
Hold the center of the plug cover with pliers and press it vertically into the plug.

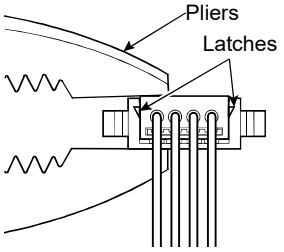

↓

5) Press the latches into the plug.
After crimping, press the latches located at both ends of the plug cover into the plug.
Check that the cover is fixed to the plug with the latches.

↓

(To the next page)

7 - 12

(From the previous page)

↓

[Correct example]

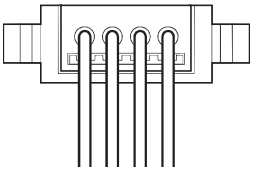

[Wrong example]

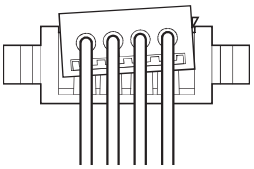

↓

[Correct example]

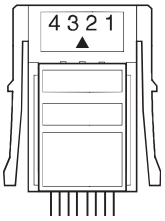

[Wrong example]

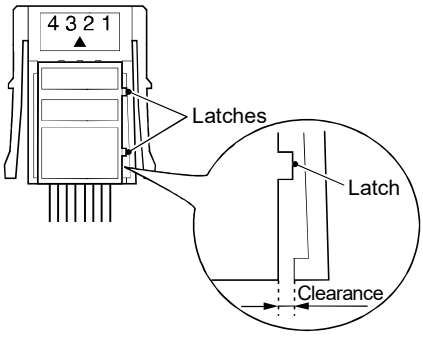

↓

(Wiring completed)

6) Check that the plug cover is horizontally-embedded to the plug. Check also that the cover is not floating.

Note: As shown in the wrong example on the left, if the cover is not horizontally-embedded or the cover is floating, it may result in improper crimping.
Press the plug cover firmly into the plug with pliers. (Refer to the correct example.)

7) Check the crimped state from the top.
Check that there is no clearance between the plug and the cover.

Note: As shown in the wrong example on the left, if the latch is not securely engaged, clearance occurs between the plug and the cover.
Press the plug cover firmly into the plug with pliers. (Refer to the correct example.)

∗1 When a cabtyre cable is used:
Strip the cable jacket 2cm or more.
If the wire lengths are not even, trim their ends with nippers to the same length.

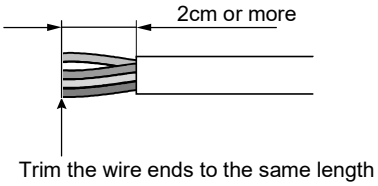

7 - 13

AbN
automation

7.2.4 Wiring procedures for the one-touch connector for communication

This section describes the wiring procedures for the one-touch connector for communication used for the connector type compact I/O module.

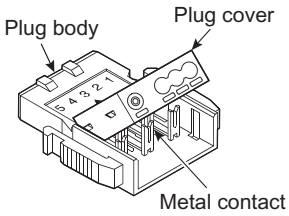

↓

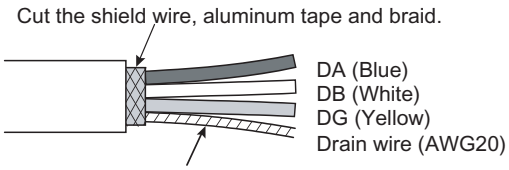

Stretch the drain wire and twist it from the base.
(3cm in length, 7 times or more)

↓

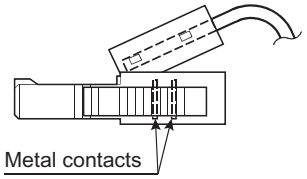

↓

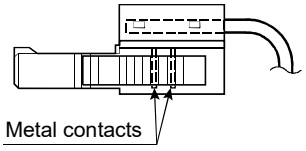

↓

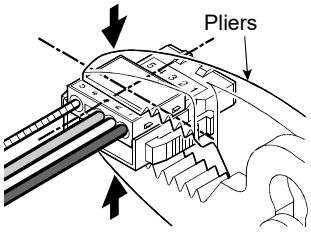

↓

(To the next page)

1) Check the connector.
Check that a plug cover is attached to the plug.

Note: Do not press the plug cover firmly into the plug before a cable is inserted.
Once crimped, the plug can no longer be used.

2) Prepare a communication cable for connection.
Strip the cable jacket 3cm or more and perform the processing described on the left.
If the wire lengths are not even, trim their ends with nippers to the same length.

3) Insert a cable.
Lift the end of the plug cover and insert a cable until it reaches the other end of the cover (within 1mm from the other end).
Failure to do so may cause an improper crimping.

4) Set the plug cover.
After the cable is inserted, put down the plug cover and set it to the position where the metal contacts fit into the cover.

5) Crimp the plug cover into the plug.
Hold the center of the plug cover with pliers and press it vertically into the plug.

7 - 14

(From the previous page)

↓

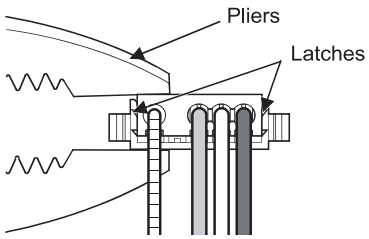

6) Press the latches into the plug.
After crimping, press the latches located at both ends of the plug cover into the plug.
Check that the cover is fixed to the plug with the latches.

↓

[Correct example]

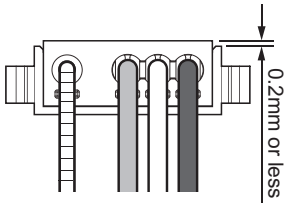

7) Check the crimped state from the side.
Check that the plug cover is horizontally-embedded to the plug.
Check also that the floating part of the cover is within 0.2mm.

Note: As shown in the wrong example on the left, if the cover is not horizontally-embedded or the floating part is 0.2mm or more, it may result in improper crimping.
Press the plug cover firmly into the plug with pliers. (Refer to the correct example.)

[Wrong example]

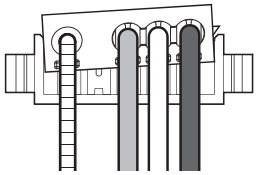

↓

[Correct example]

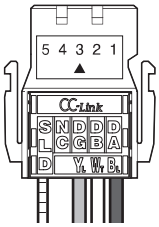

8) Check the crimped state from the top.
Check that there is no clearance between the plug and the cover.

Note: As shown in the wrong example on the left, if the latch is not securely engaged, clearance occurs between the plug and the cover.
Press the plug cover firmly into the plug with pliers. (Refer to the correct example.)

[Wrong example]

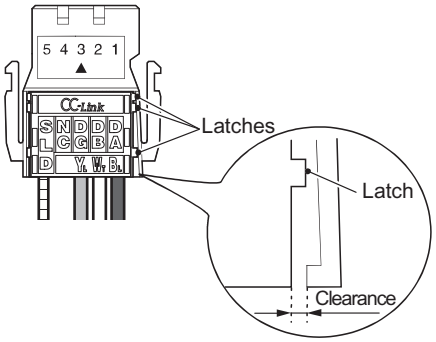

↓

(Wiring completed)

7 - 15

AbN
automation

7.2.5 Wiring procedures for the one-touch connector for power supply and FG

This section describes the wiring procedures for the one-touch connector used for power supply and FG of the connector type compact I/O module.

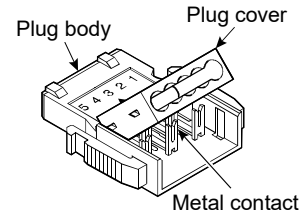

↓

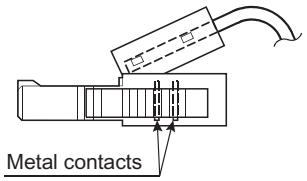

↓

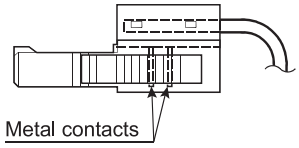

↓

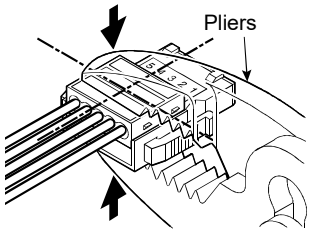

↓

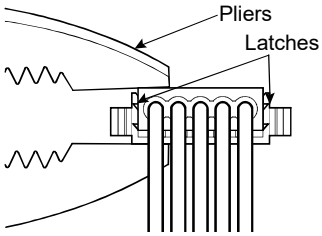

↓

(To the next page)

1) Check the connector.
Check that a plug cover is attached to the plug.

Note: Do not press the plug cover firmly into the plug before a cable is inserted.
Once crimped, the plug can no longer be used.

2) Insert a cable. (*1)
Lift the end of the plug cover and insert a cable until it reaches the other end of the cover (within 1mm from the other end).
Failure to do so may cause an improper crimping.

Note: Use cables applicable to the module.

3) Set the plug cover.
After the cable is inserted, put down the plug cover and set it to the position where the metal contacts fit into the cover.

4) Crimp the plug cover into the plug.
Hold the center of the plug cover with pliers and press it vertically into the plug.

5) Press the latches into the plug.
After crimping, press the latches located at both ends of the plug cover into the plug.
Check that the cover is fixed to the plug with the latches.

7 - 16

(From the previous page)

↓

[Correct example]

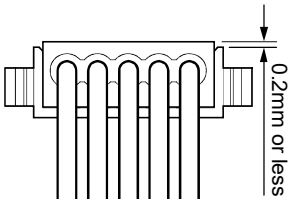

[Wrong example]

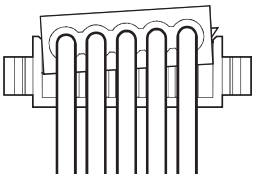

↓

[Correct example]

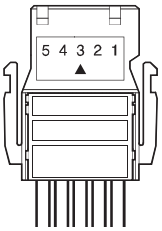

[Wrong example]

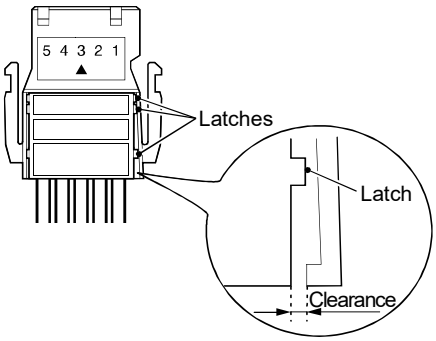

↓

(Wiring completed)

6) Check the crimped state from the side.
Check that the plug cover is horizontally-embedded to the plug.
Check also that the floating part of the cover is within 0.2mm.

Note: As shown in the wrong example on the left, if the cover is not horizontally-embedded or the floating part is 0.2mm or more, it may result in improper crimping.
Press the plug cover firmly into the plug with pliers. (Refer to the correct example.)

7) Check the crimped state from the top.
Check that there is no clearance between the plug and the cover.

Note: As shown in the wrong example on the left, if the latch is not securely engaged, clearance occurs between the plug and the cover.
Press the plug cover firmly into the plug with pliers. (Refer to the correct example.)

*1 When a cabtyre cable is used:
Strip the cable jacket 2cm or more.
If the wire lengths are not even, trim their ends with nippers to the same length.

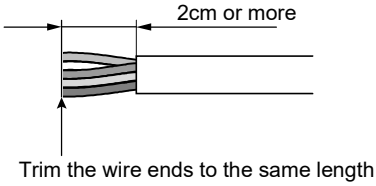

7 - 17

AbN
automation

7.3 Handling of the Waterproof-type Remote I/O Module

7.3.1 List of dustproof and waterproof caps

The following table lists the model names of dustproof cap and waterproof cap applicable to the CC-Link system waterproof-type remote I/O module.

	Mitsubishi Electric product model name	Specifications
Dustproof cap ＊1	A6CAP-DC1	—
Waterproof cap ＊1	A6CAP-WP1	Protection of degree IP67

＊1 A pack of A6CAP- □□1 (manufactured by Mitsubishi Electric) includes 20 pieces.

7.3.2 Waterproof plug attachment procedure

The attachment procedure for the waterproof plug supplied with the AJ65SBTW4-16□ is shown below. In order to prevent water leakage, attach a waterproof plug to the penetrating pipe for the transmission and module power-supply lines in the following way.

1) Remove the nut and bushing from the penetrating pipe attached to the module.

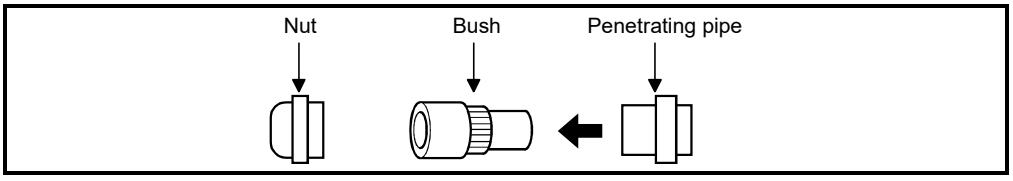

2) Insert the waterproof plug into the penetrating pipe and secure it by tightening the nut.
Tightening torque: 0.99 to 1.48N·m

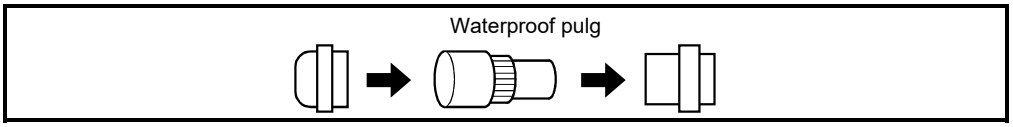

7 - 18

7.3.3 Wiring procedure for the terminal block

This section describes the wiring procedure of a terminal block to the waterproof-type remote I/O module.

1) Remove the module front cover, and pass the cables through the through pipe for the transmission and module power-supply lines.

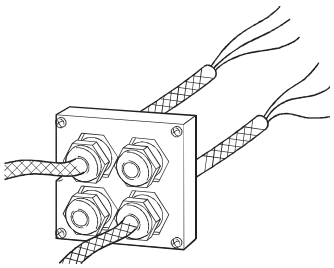

2) Open the module top cover and remove the terminal block, then perform wiring to the terminal block.

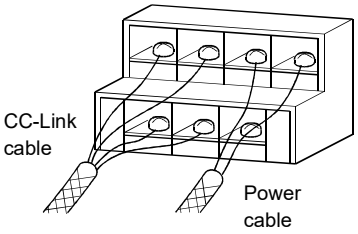

Terminal layout diagram

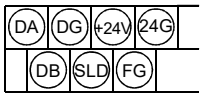

3) Secure the terminal block using screws, then fasten the module front and top covers using screws.

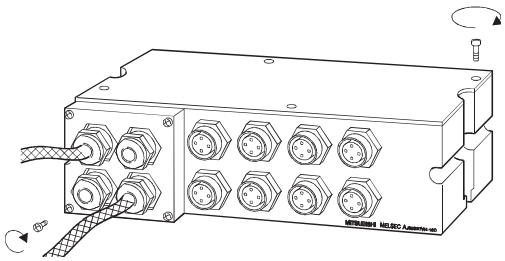

4) Tighten the nut* on the through pipe for the transmission and module power-supply lines.

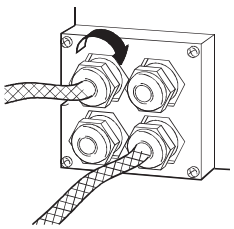

POINT

- Always install a waterproof plug to the unused through pipe for the transmission and module power-supply lines. (Refer to Section 7.3.2.)
- When wiring the transmission and module power-supply lines, please take care not to apply force in excess of 0.39N·m excessive force to the wiring at the inlet.
- In the event of the ambient temperature exceeding 56 °C after wiring the unit, make sure to re-tighten the nuts.

AbN
automation

7.4 Handling of the Low Profile Waterproof Type Remote I/O Module

7.4.1 List of waterproof caps

The model name of the waterproof cap applicable to the CC-Link system low profile waterproof type remote I/O module (AJ65FBTA□-16□) is shown below. The following table lists the model names of waterproof cap applicable to the CC-Link system low profile waterproof type remote I/O module (AJ65FBTA□-16□).

	Mitsubishi Electric Product Model Name	Use
Waterproof cap (20 pieces, Sold separately)	A6CAP-WP2	For LINK OUT connector and I/O connector

POINT

- The waterproof cap (A6CAP-WP1) cannot be used.

7.4.2 Waterproof cap installation method

The installation method for the waterproof caps packed with the product is shown below.
In order to prevent water penetration, install the waterproof caps on the unused Link Out side connectors and I/O connectors using the following method.

1) Insert the waterproof cap in the empty connector on the main module, then tighten it.
   Tightening Torque Range: 0.29 to 0.34N·m

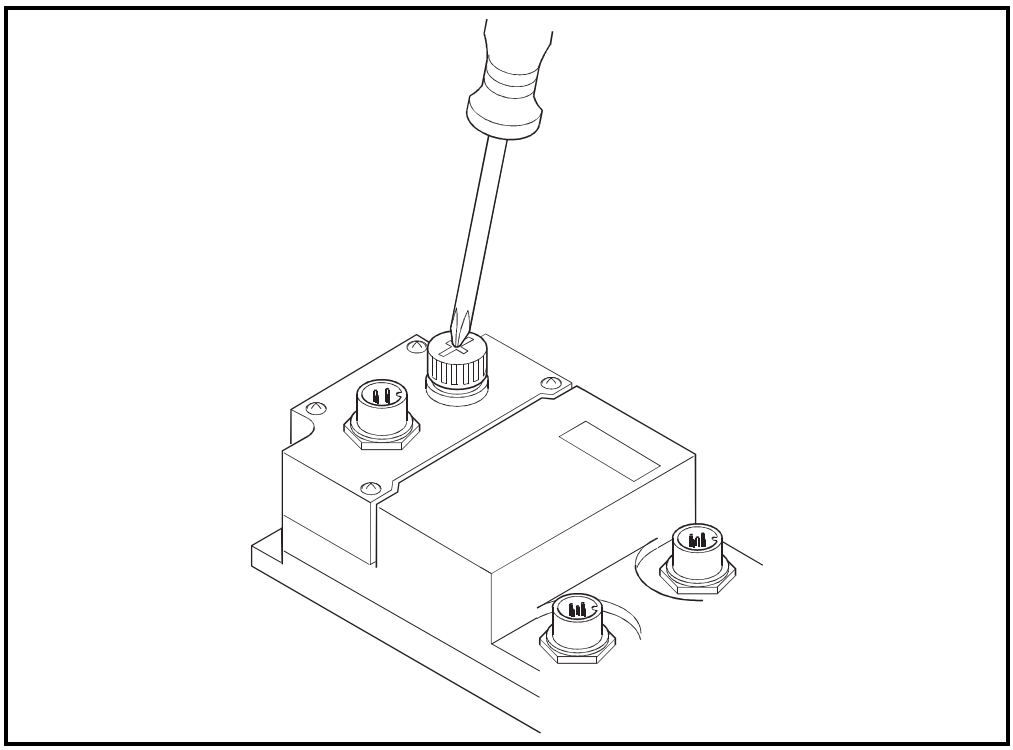

7 - 20

7.5 Connectors and Tools Used for Connecting the FCN Connector Cables

⚠WARNING

- When connecting the connector cables by crimp-contact, pressure-displacement or soldering, make sure to use the tools listed in the table below. Attach the connectors securely to the module.

Three types of 40-pin connectors are available for the AJ65□BTCF1-32□ and the AJ65□BTCF1J-32□; they are soldering type, pressure-displacement type and crimp-contact type.
Please purchase the required 40-pin connector, and either pressure-displacement or crimp-contact type tool according to the listing below.

(1) Connector types

Type	Model name
Soldering type connector (Straight-out type)	A6CON1
Crimp-contact type connector (Straight-out type)	A6CON2
Pressure-displacement type connector (Flat cable type)	A6CON3
Soldering type connector (Straight-out/diagonal-out type)	A6CON4

(2) Crimp-contact and pressure-displacement type tools

Type	Model name	Cable size	Manufacturer
Crimp-contact tool	N363TT005H	28 to 24 AWG	OTAX CO., LTD.
Pressure-displacement tool	N367TT012H (locator plate) ＊1	-	

＊1 Attach a locator plate using the commercially available hand press.

7 - 21

AbN
automation

7.6 Attaching and Removing the Protective Cover for the Compact Remote I/O Module

Covering the front of CC-Link system compact remote I/O module with a protective cover can prevent the following accidents:

- Improper contact to the terminal block or connector.
- Module malfunction resulted from connector drop.

For the model name of the protective cover for the compact remote I/O module, see Section 1.5.

Follow the procedure illustrated below to mount the protective cover on the module.

(1) In the case of A6CVR-8/16/32

<How to mount>

Hook the top of the protective cover onto the top of the remote I/O module, then push the lower part of the cover toward the module until you hear a click sound.

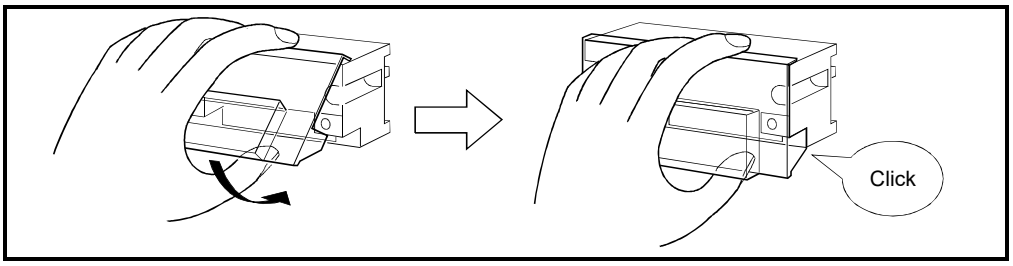

<How to remove>

Place your thumb under the protective cover and pull it upwards.

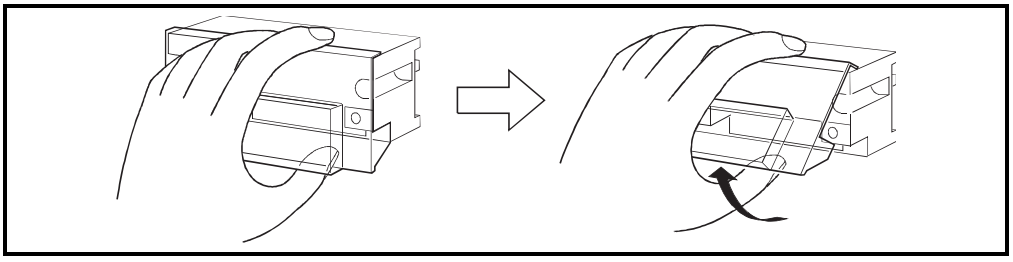

7 - 22

(2) In the case of A6CVR-VCE8/16

<How to mount>

Confirm the orientation of the protective cover as shown in the diagram below. Then, attach the cover straight to the module as shown by the arrow and push in securely until it stops.

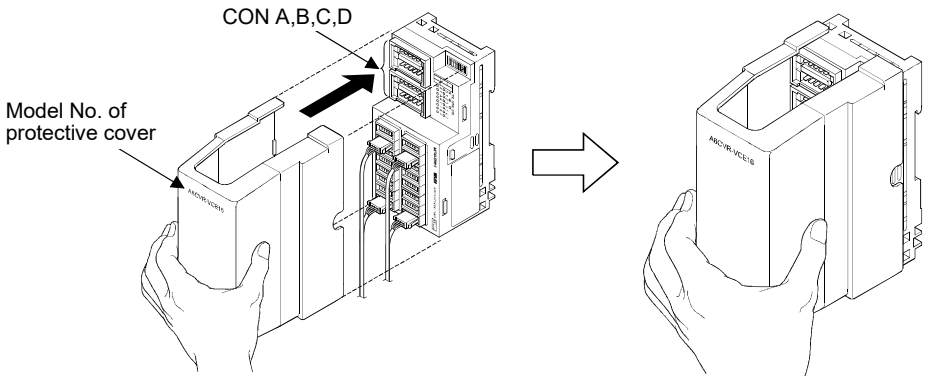

*: Attach the protective cover, keeping its model No. and the CON A, B, C and D in the same orientation.
Otherwise, the cover cannot be attached.

Securely fix tabs of the protective cover to the groove of the module as shown below.
Note that the fixing tab positions vary with the protective cover used.

In the case of A6CVR-VCE16

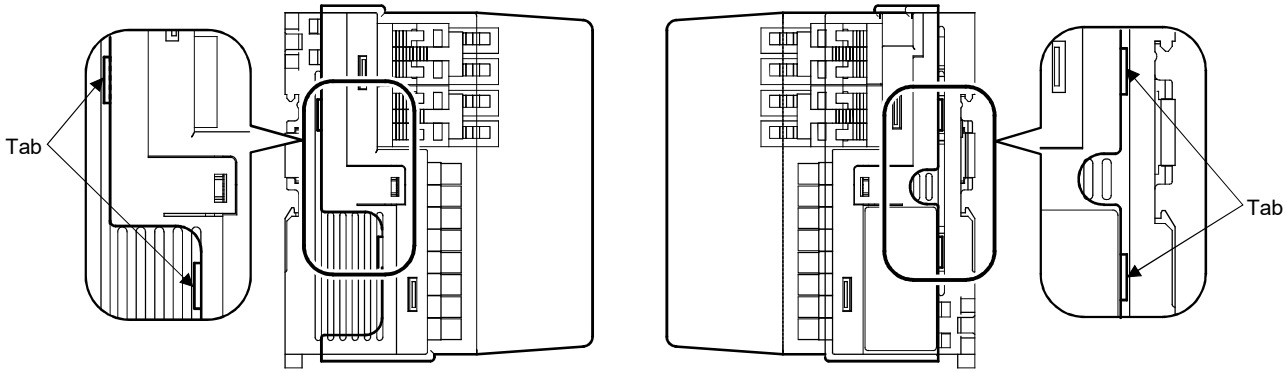

(Left side) (Right side)

In the case of A6CVR-VCE8

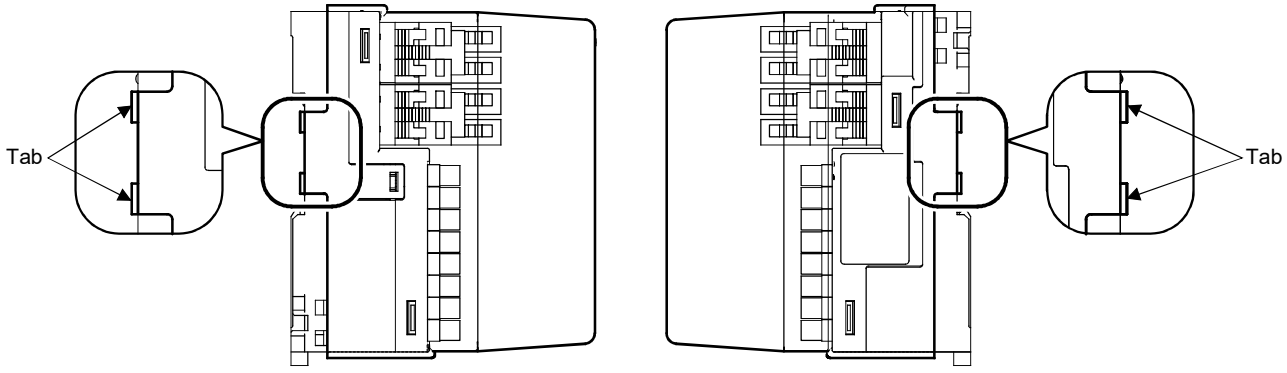

(Left side) (Right side)

7 - 23

AbN
automation

<How to remove>

Extend the width of protective cover slightly as shown by the arrow 1). Then, pull it out vertically from the module as shown by the arrow 2).

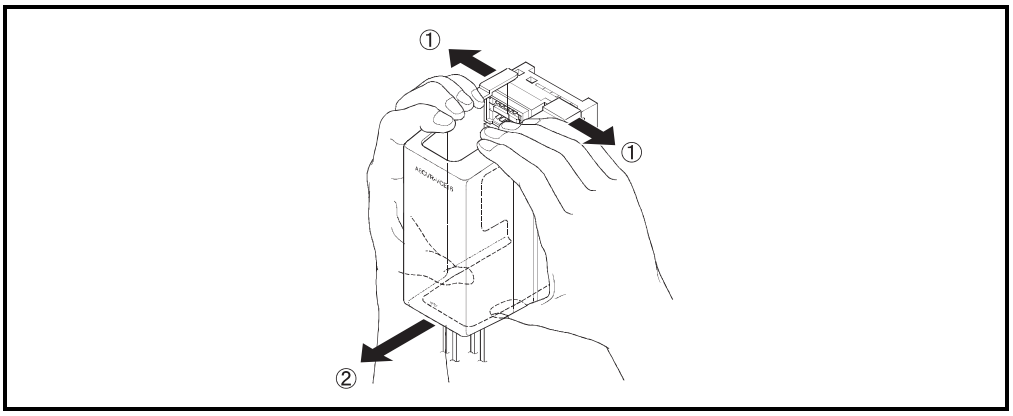

7 - 24

(3) In the case of A6CVR-VS16

<How to mount>

Attach the protective cover as shown below.

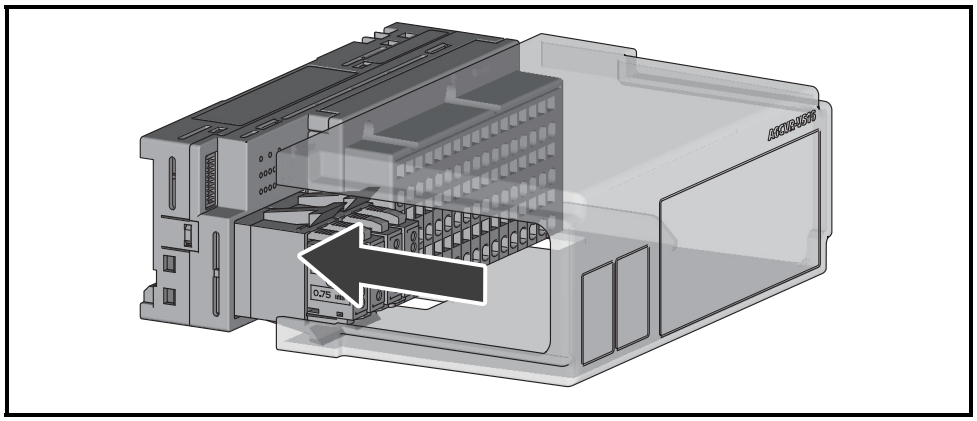

Attach the protective cover so that the online connector for communication on the module is opposite to the model name of the protective cover. Do not attach the cover in the direction other than that shown above.

Securely engage tabs of the protective cover with the grooves on the module as shown below.
Note that the locations of tabs vary depending on the protective cover used.

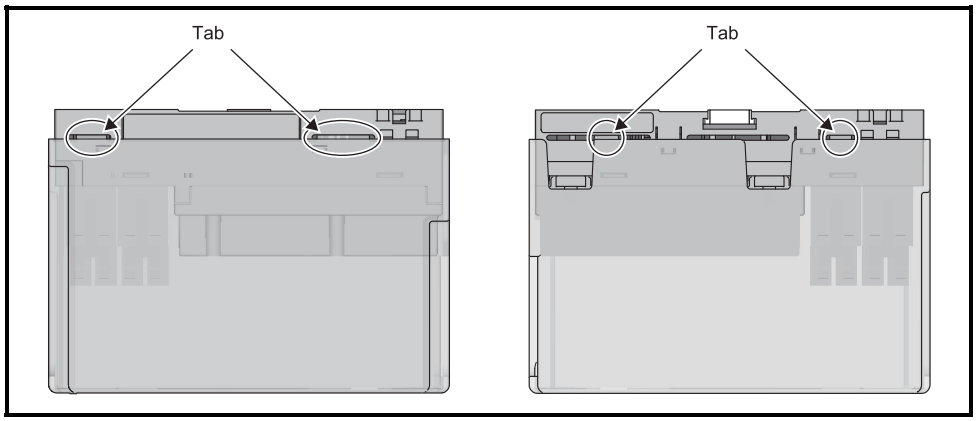

(Top part) (Bottom part)

AbN
automation

<How to remove>

Hold the both ends of the protective cover (top part) as shown below.
To disengage the tabs from the module, lift up the protective cover in the direction of arrow [1], and pull it in the direction of arrow [2].

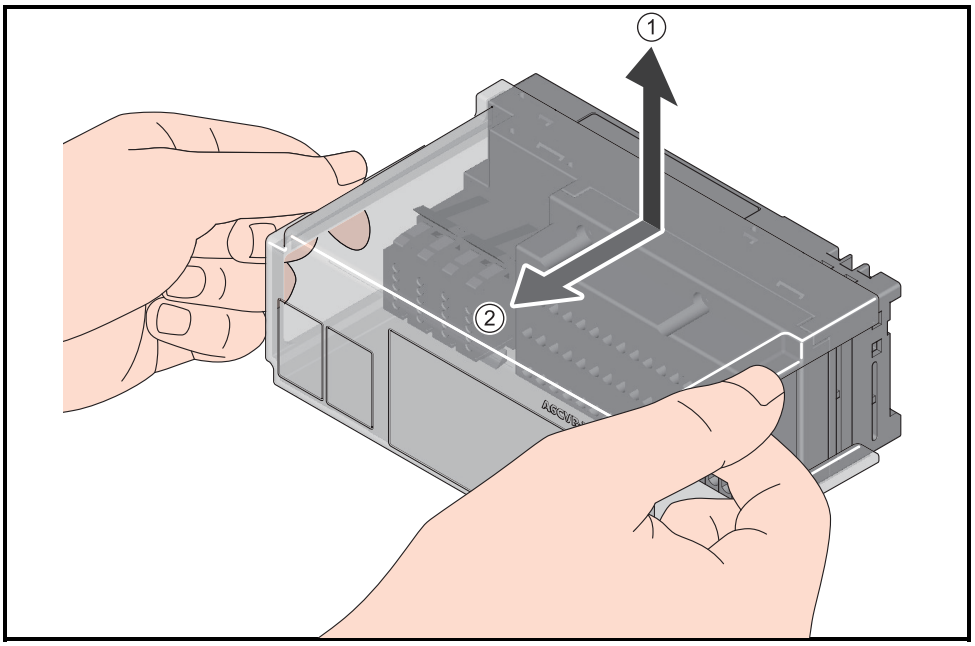

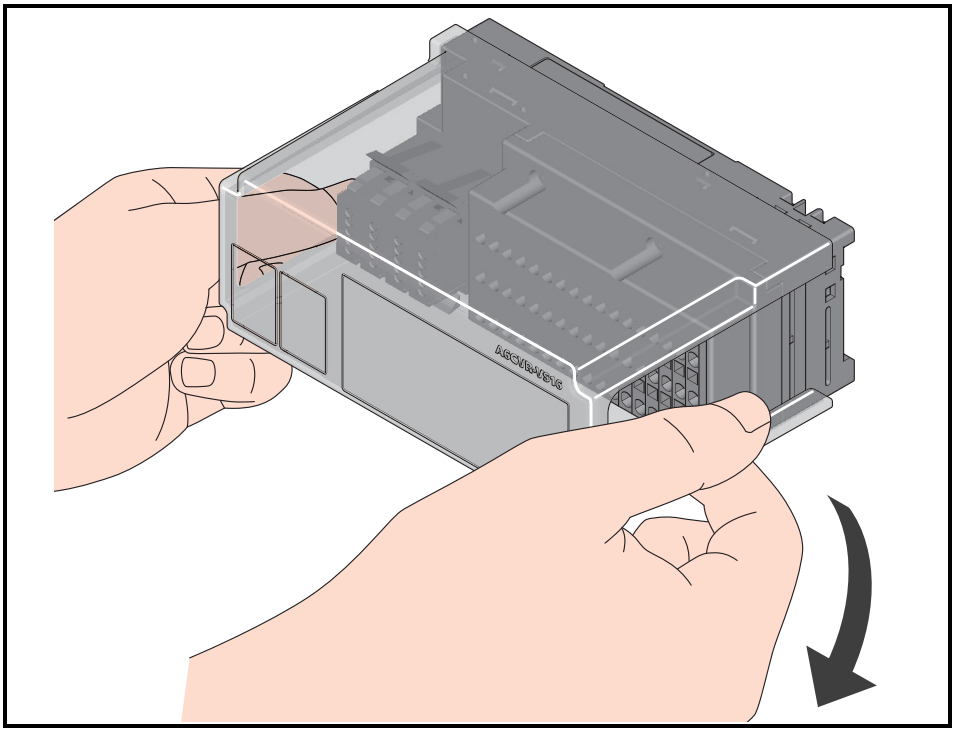

Hold the both ends of the protective cover (bottom part), slightly push it down, and pull it in the direction of arrow [2] as you did for the top part of the cover.

7 - 26

<Precautions for installing the module>

Using the module with the A6CVR-VS16 (protective cover) attached requires a configuration where cables come out from both sides of the module. Therefore, in such a case, have enough spaces between the module and other structures or parts considering the bending radius of the cables used.

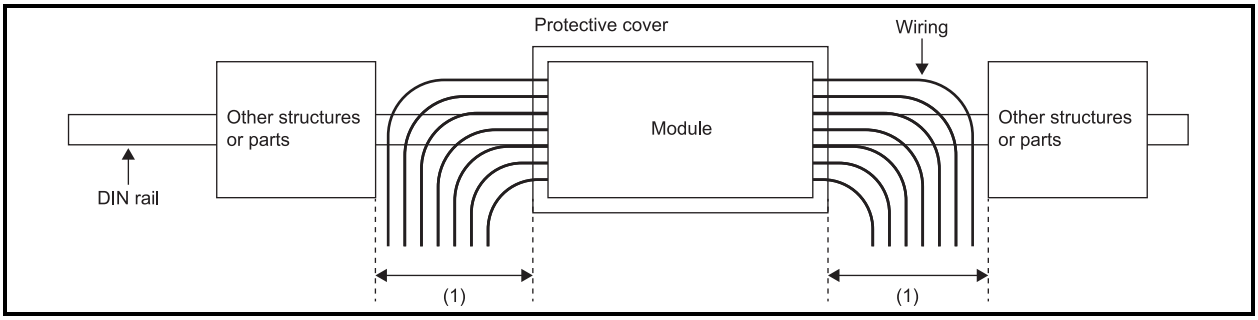

(1) Distance determined considering the bending radius of the cables

AbN
automation

POINT

(1) When attaching the protective cover, ensure the space of 50mm or more between the target module and the modules on the right and left sides. Also, ensure the space of 100mm or more over the upper part of the module, so that the cover can be pulled upward.

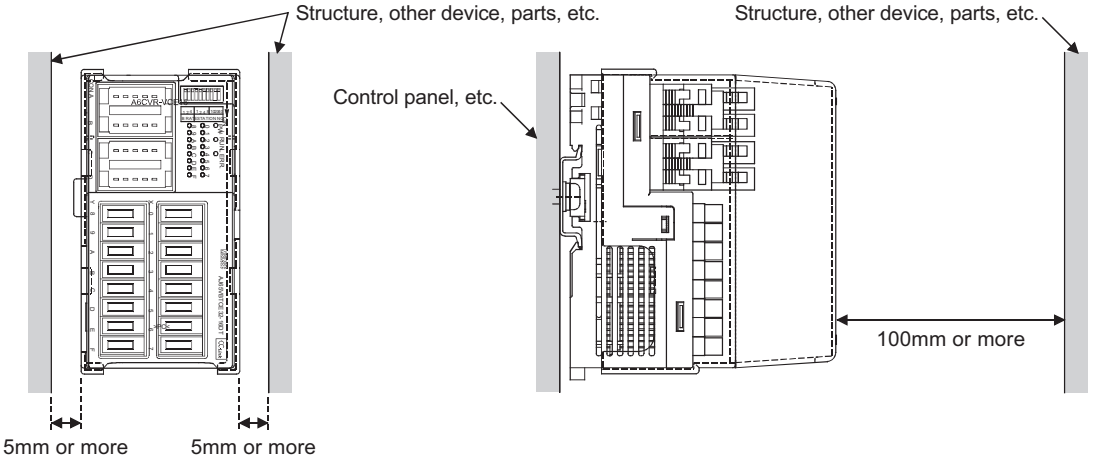

(2) Fix the wiring with a clamp or similar parts. Failure to do so may apply force to the protective cover, resulting in it falling from the module. In addition, the wiring cable may be damaged.

(3) When attaching a one-touch connector plug with terminating resistor (A6CON-TR11(N)) together with an online connector for communication (A6CON-LJ5P), follow the procedure provided below.
Failure to do so may cause the terminating resistor, protective cover and communication cable to interfere with each other.

- Tilt the terminating resistor toward 1) or 2) as shown in the diagram below, and then attach the protective cover.
- Connect the one-touch connector plug with terminating resistor to CON B.

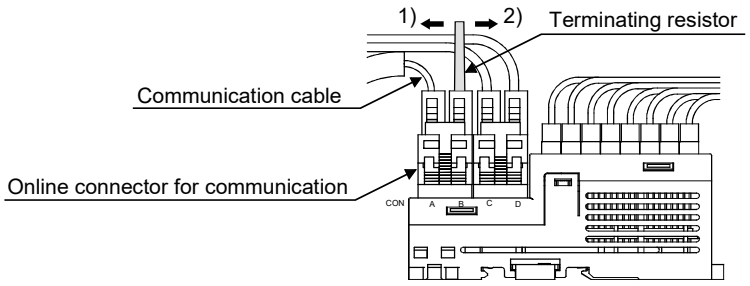

7 - 28

7.7 Connection Method of CC-Link Dedicated Cable

This section describes how to connect the compact remote I/O module to the master module using CC-Link dedicated cables.

⚠WARNING

- Shut off the external power supply (all phases) used in the system before wiring. Failure to do so may result in electric shock or damage to the product.
- After wiring, attach the included terminal cover to the module before turning it on for operation.
  Failure to do so may result in electric shock.
- Shut off the external power supply (all phases) used in the system before cleaning the module or retightening the terminal block screw. Failure to do so may cause the module to fail or malfunction.

⚠CAUTION

- Do not install the control lines or communication cables together with the main circuit lines or power cables.
  Keep a distance of 100mm or more between them.
  Failure to do so may result in malfunction due to noise.
- Individually ground the FG terminal of the programmable controller with a ground resistance of 100Ω or less.
  Failure to do so may result in electric shock or malfunction.
- Tighten any unused terminal screws within the specified torque range (0.42 to 0.50N•m).
  Failure to do so may cause a short circuit due to contact with a solderless terminal.
- Use applicable solderless terminals and tighten them within the specified torque range. If any solderless spade terminal is used, it may be disconnected when the terminal screw comes loose, resulting in failure.
- Check the rated voltage and terminal layout before wiring to the module, and connect the cables correctly.
  Connecting a power supply with a different voltage rating or incorrect wiring may cause a fire or failure.
- Securely connect the cable connectors.
  Poor contact may cause malfunction.
- Place the cables in a duct or clamp them.
  If not, dangling cable may swing or inadvertently be pulled, resulting in damage to the module or cables or malfunction due to poor contact.
- Do not install the control lines or communication cables together with the main circuit lines or power cables.
  Failure to do so may result in malfunction due to noise.
- When disconnecting the cable from the module, do not pull the cable by the cable part.
  For the cable with connector, hold the connector part of the cable.
  For the cable without connector, loosen the screw first and remove it.
  Pulling the cable connected to the module may result in malfunction or damage to the module or cable.

AbN
automation

(1) The following figure shows how to connect compact remote I/O modules to a master module.

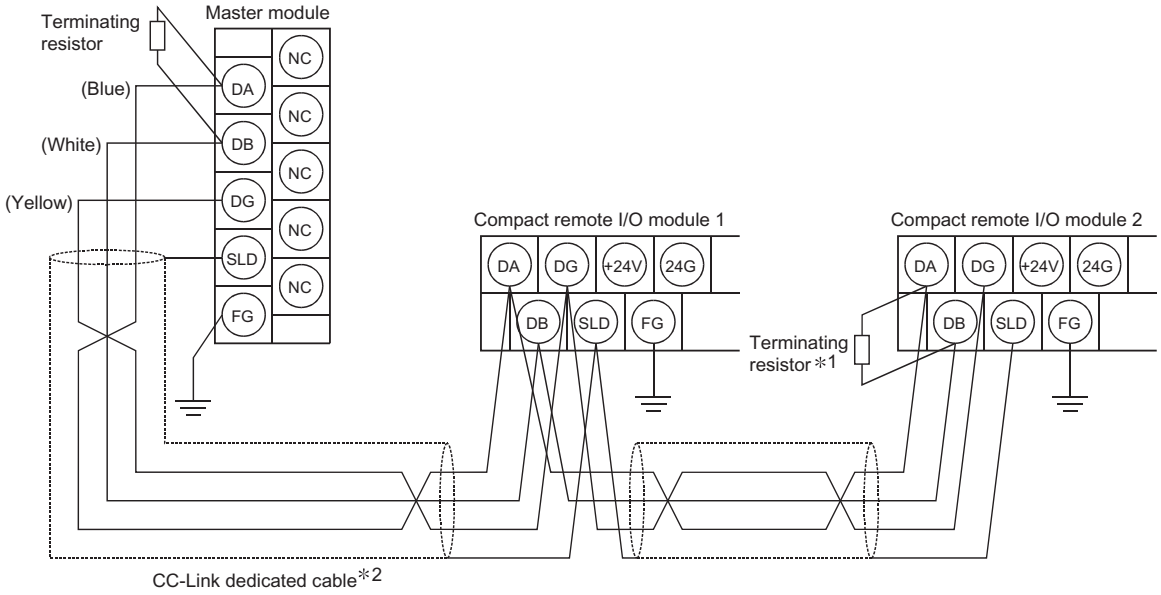

[Simplified diagram]

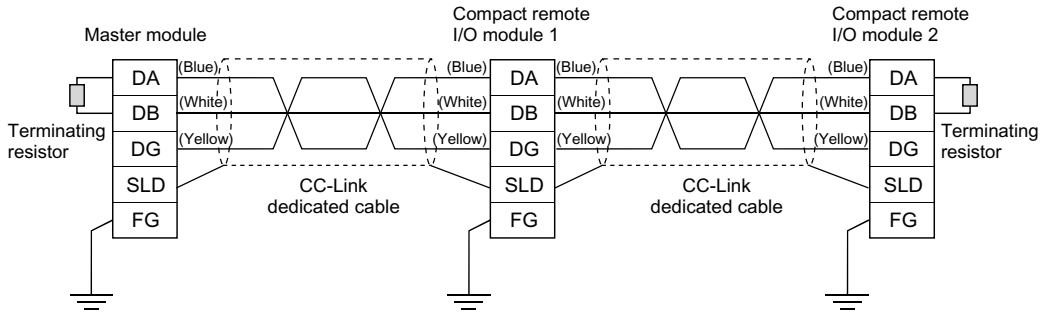

∗1 Connect a terminating resistor to the compact type remote I/O module used as a terminal station as shown below. (Terminating resistors are provided with a master module.)

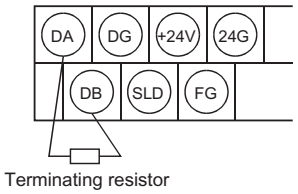

∗2 Use CC-Link dedicated cables in the CC-Link system.
Performance of the CC-Link system cannot be guaranteed if any cables other than the CC-Link dedicated cables are used.
For the specifications and any inquiries on the CC-Link dedicated cables, refer to the following:
CC-Link Partner Association Website: www.cc-link.org

POINT
Compact remote I/O modules with an input response of 0.2ms are more susceptible to noise interference than other modules. Keep the wiring of the I/O module away from power cables as much as possible.

7 - 30

(2) The following figure shows how to connect connector type remote I/O modules to a master module.

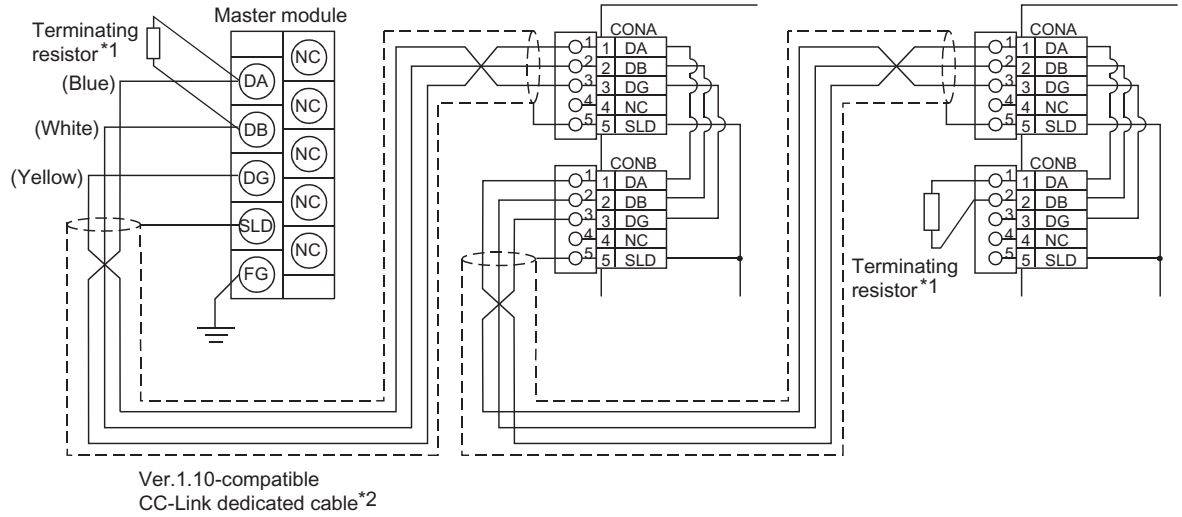

[Simplified diagram]

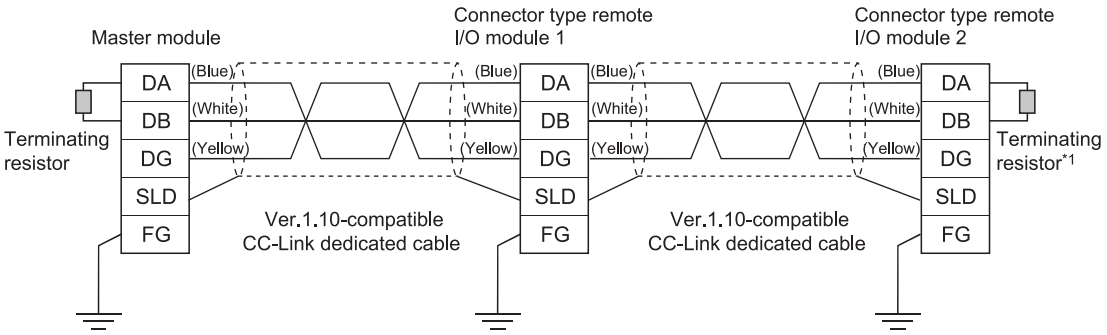

*1 When a connector type remote I/O module is used as a terminal station, connect a one-touch connector plug with terminating resistor (A6CON-TR11(N)).

*2 Use CC-Link dedicated cables in the CC-Link system.
Performance of the CC-Link system cannot be guaranteed if any cables other than the CC-Link dedicated cables are used.
For the specifications and any inquiries on the CC-Link dedicated cables, refer to the following:
CC-Link Partner Association Website: www.cc-link.org

POINT

Compact remote I/O modules with an input response of 0.2ms are more susceptible to noise interference than other modules. Keep the wiring of the I/O module away from power cables as much as possible.

7 - 31

AbN
automation

(3) The following figure shows how to connect a one-touch connector and online connector to the remote I/O module.

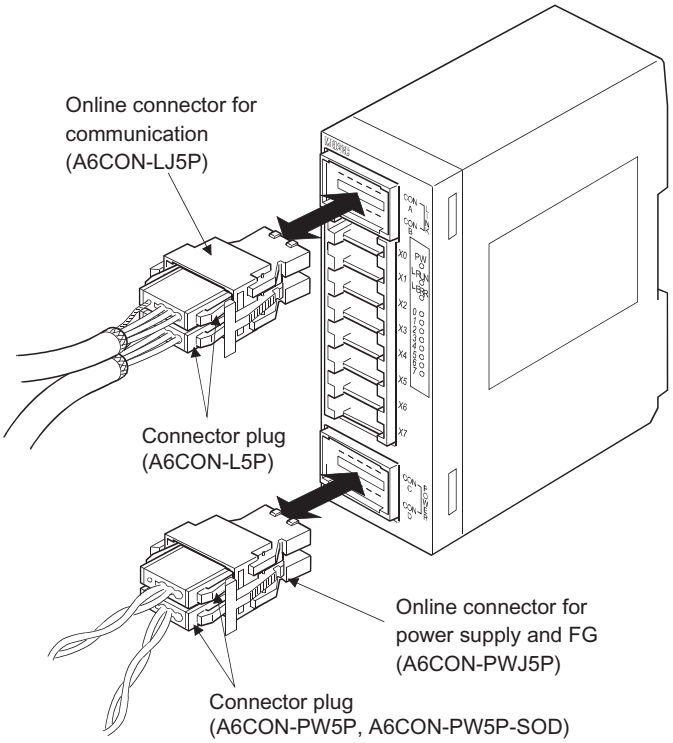

POINT
• For a one-touch connector for communication, use Ver.1.10-compatible CC-Link dedicated cables (FANC-110SBH, FA-CBL200PSBH, or CS-110). Ver.1.10-compatible CC-Link dedicated cables other than those above, CC-Link dedicated cables, and CC-Link dedicated high-performance cables are not supported. • To connect or remove a one-touch connector to/from an online connector, refer to the manual included with the online connector.

7 - 32

7.8 Handling of Spring Clamp Terminal Block Type Remote I/O Module

7.8.1 Installation and removal of the spring clamp terminal block

(1) Installing the spring clamp terminal block

How to install a 2-piece spring clamp terminal block is shown below.
Secure the terminal block part using the following method. Incomplete installation may cause fall, short circuit or malfunction.

1) Push the spring clamp terminal block fixing tabs of the 2-piece terminal block in the arrow direction until a click can be heard.

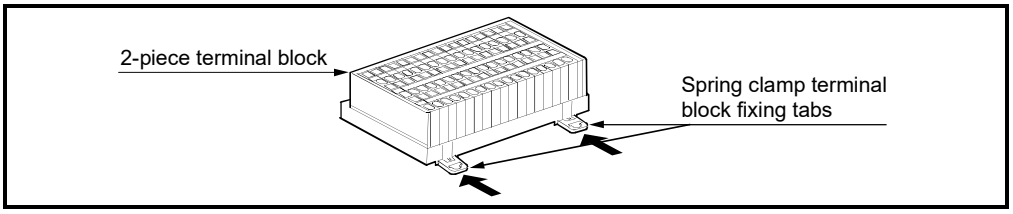

2) Connect the connector (female) of the 2-piece terminal block to the connector (male) of the module body and press it until a click can be heard. Check that both of two fixing tabs are inserted completely.

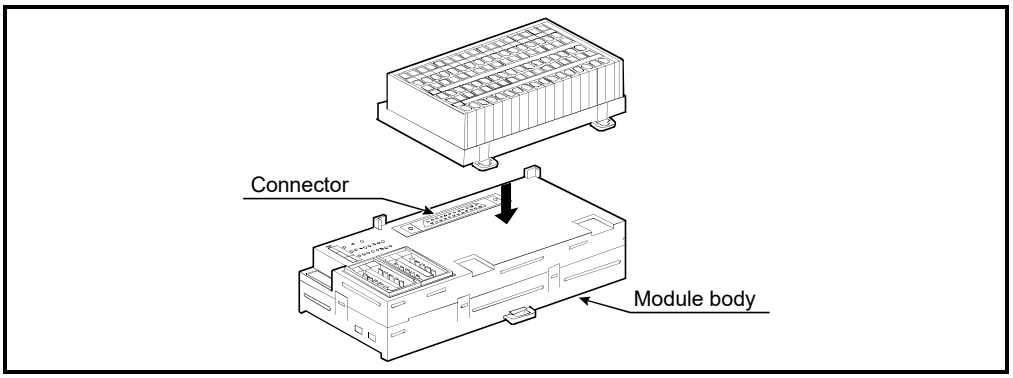

3) Tighten the 2-piece terminal block fixing screws. (Tightening torque range: 0.34 to 0.46N·m)

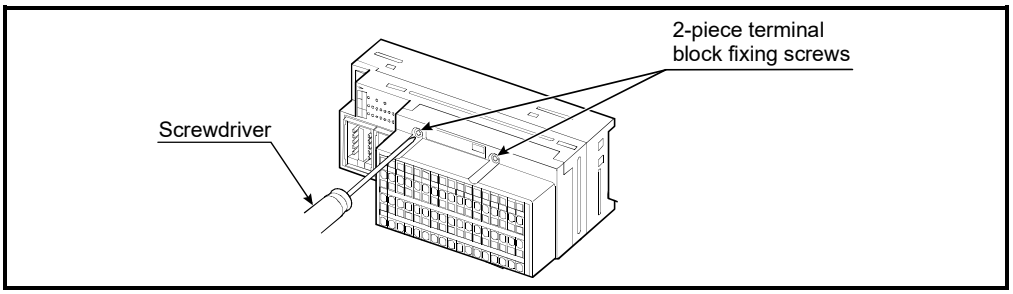

(2) Removing the spring clamp terminal block

Remove the spring clamp terminal block in reverse order of the above installation procedure.

1) Loosen the 2-piece terminal block fixing screws.
2) Pull out the spring clamp terminal block fixing tabs.
3) Lift the 2-piece terminal block to remove it from the main body.

AbN
automation

7.8.2 Procedure for wiring the spring clamp terminal block

This section describes the procedure for connecting a cable to the spring clamp terminal block remote I/O module.

(1) Precaution for connecting or disconnecting cables

(a) When inserting two wires into the circular shaped hole of the spring clamp terminal block, use the TGWV TC1.25-T9 (manufactured by NICHIFU TERMINAL INDUSTRIES CO., LTD.). Inserting two or more wires without using the TGWV TC1.25-T9 may result in a poor contact to the spring clamp terminal part.

(b) Strip the wire according to the specification. If the wire strip length is too long, the exposed conductive part may cause electric shock or short circuit. If the wire strip length is too short, it may result in a poor contact to the spring clamp terminal part.

(c) When using a spring clamp terminal block tool, follow the instruction below. Failure to do so may cause damage of the spring clamp terminal part or the terminal block resin part.

- Use a dedicated tool for a spring clamp terminal block.
- Do not insert the wire or the bar solderless terminal before inserting the tool into the square shaped hole.
- Insert the tool vertically into the hole.

(2) Connecting a cable

(a) Insert the tool vertically all the way inside the square shaped hole of the remote I/O module.

(b) Insert the wire or the bar solderless terminal into the circular shaped hole, and remove the tool from the hole.

(c) Check that the wire or the bar solderless terminal is firmly clamped by pulling it lightly.

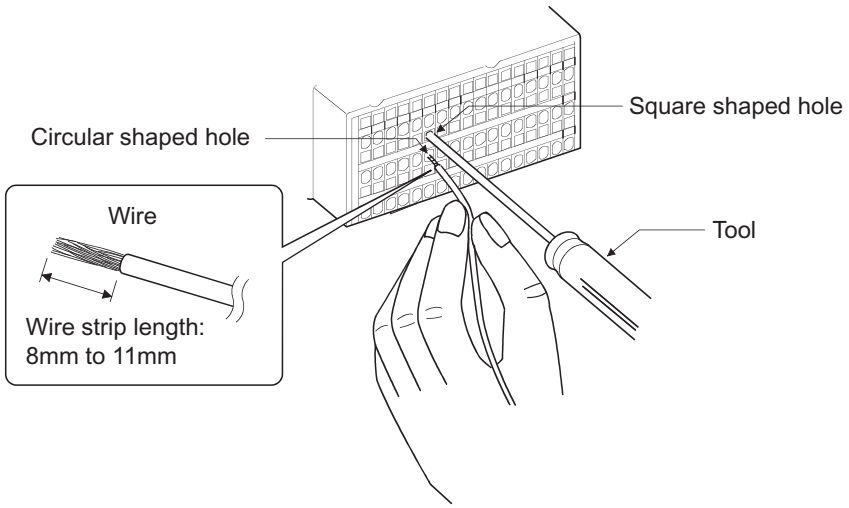

(3) Disconnecting a cable

(a) Insert the tool vertically all the way inside the square shaped hole of the remote I/O module.

(b) Pull the wire or the bar solderless terminal out of the hole.

7 - 34

(4) Recommended product list

Product name	Model name	Applicable wire size	Contact
Tool (dedicated to spring clamp terminal block)	KD-5339	—	Mitsubishi Electric System Service Co., Ltd.
Bar solderless terminal ∗1	TGV TC1.25-9T	0.3 to 1.65mm^2	NICHIFU TERMINAL INDUSTRIES CO., LTD.
	TGWV TC1.25-T9∗2		
Dedicated bar solderless terminal tool	NH65A	—	
Bar solderless terminal ∗1	NF 0.5	0.5mm^2	NICHIFU TERMINAL INDUSTRIES CO., LTD.
	NF 0.75	0.75mm^2	
	NF 1	0.9 to 1.0mm^2	
	NF 1.5	1.25 to 1.5mm^2	
Dedicated bar solderless terminal tool	NH 79A	—	

∗1 Use this product when doing the terminal treatment of the wire and inserting it into the spring clamp terminal block.
∗2 Use this product when inserting two wires to one terminal.

AbN
automation

7.9 Attaching Mounting Brackets to the Module

7.9.1 Attachment of mounting brackets

This section describes the procedures for directly installing the AJ65VBTS□-□□□ or AJ65VBTCE□-□□□ to a control panel using mounting brackets and screws. If the module is not fixed securely, it can cause drop of the module, short circuit, or malfunction.

(1) Align the projections of a mounting bracket with the corresponding slots of the module.

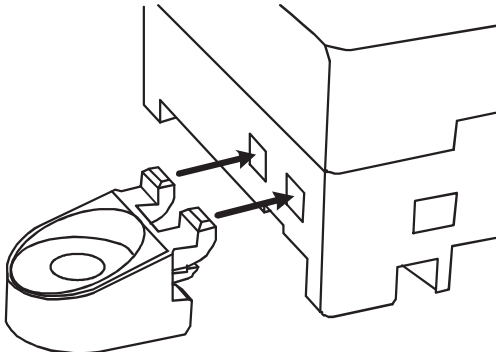

(2) Obliquely insert the projections to the slots, and press down the mounting bracket in the direction of an arrow until it clicks.

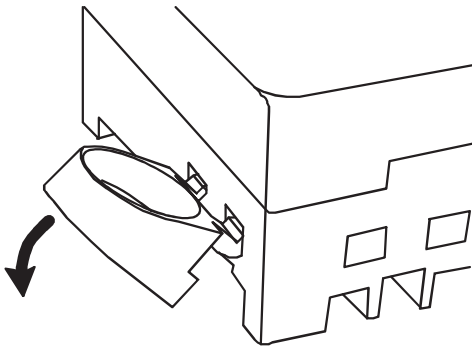

(3) Screw the mounting bracket to a control panel. (Tightening torque range: 0.82 to 1.11N·m)

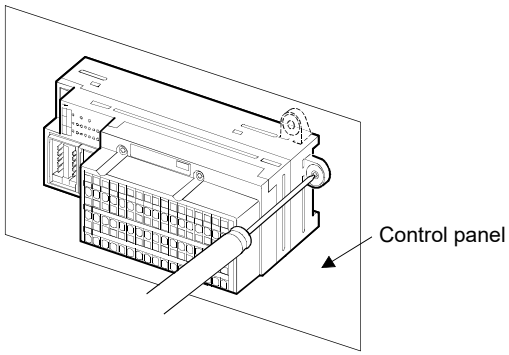

7 - 36

7.9.2 Precautions for attaching mounting brackets

The mounting brackets can be attached differently depending on the modules. Attach them to two positions.

(1) AJ65VBTS□-16□ The mounting brackets can be attached as shown below (two different ways).

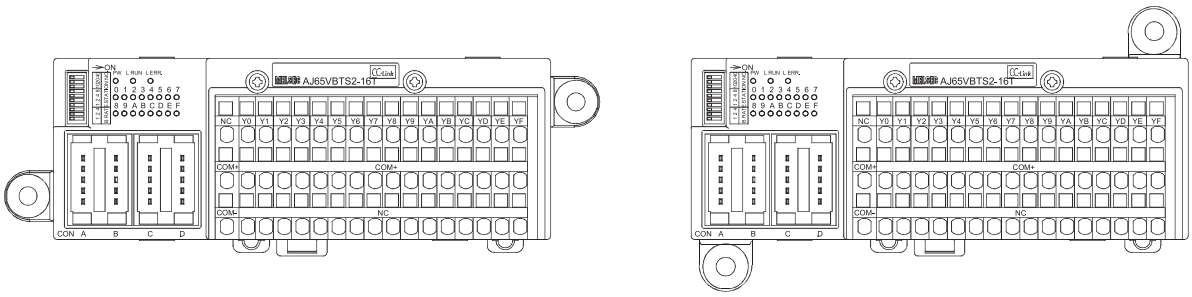

(2) AJ65VBTS□-32□ The mounting brackets can be attached as shown below (only one way).

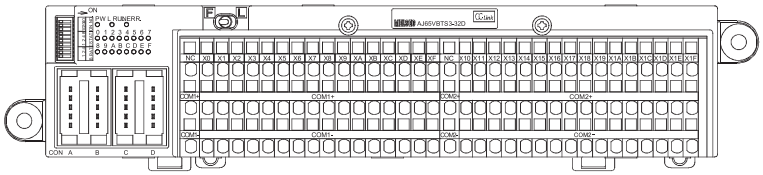

(3) AJ65VBTCE□-8□ The mounting brackets can be attached as shown below (two different ways).

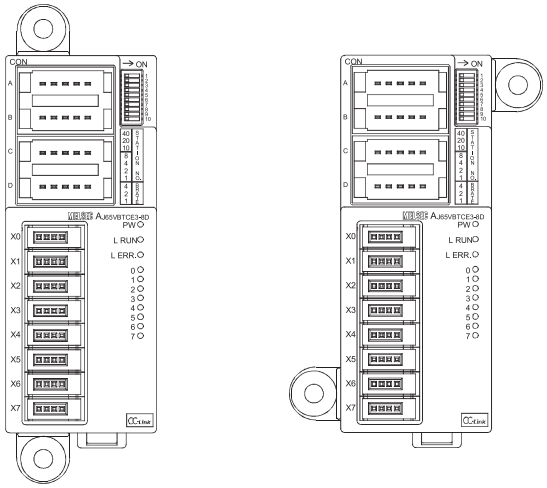

7 - 37

AbN
automation

(4) AJ65VBTCE□-16□, AJ65VBTCE□-32□

The mounting brackets can be attached as shown below (two different ways).

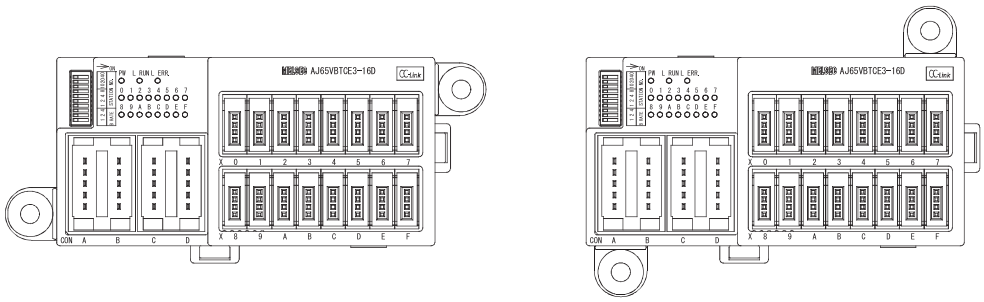

POINT

- Do not attach the mounting brackets in any ways other than those described above.

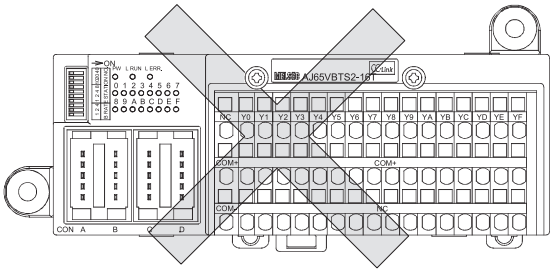

7 - 38

7.10 Mounting the DIN Rail Adapter

7.10.1 Specifications

The following table shows the specifications of the DIN rail adapter.

Item \ Model	A6DIN1C
Mountable module	AJ65DBTB1-32D, AJ65DBTB1-32T1, AJ65DBTB1-32R, AJ65DBTB1-32DT1, AJ65DBTB1-32DR
External dimensions	174mm × 68mm × 10mm
Weight	0.07kg
Applicable DIN rail type (compliant with IEC 60715 and JIS C 2812)	TH35-7.5Fe, TH35-7.5Al, TH35-15Fe

7.10.2 Handling precautions

(1) The DIN rail adapter is made from resin. Do not drop or apply strong shock to the adapter.

(2) Mounting pitch

When installing a DIN rail to a control panel, keep mounting pitches 200mm or less.

7.10.3 Attaching the DIN rail adapter to the module

Use two M4 screws (length: 10mm) to attach the DIN rail adapter to the AJ65DBTB1-32 □ type compact remote I/O module.
The tightening torque range is 0.78 to 1.18N•m.

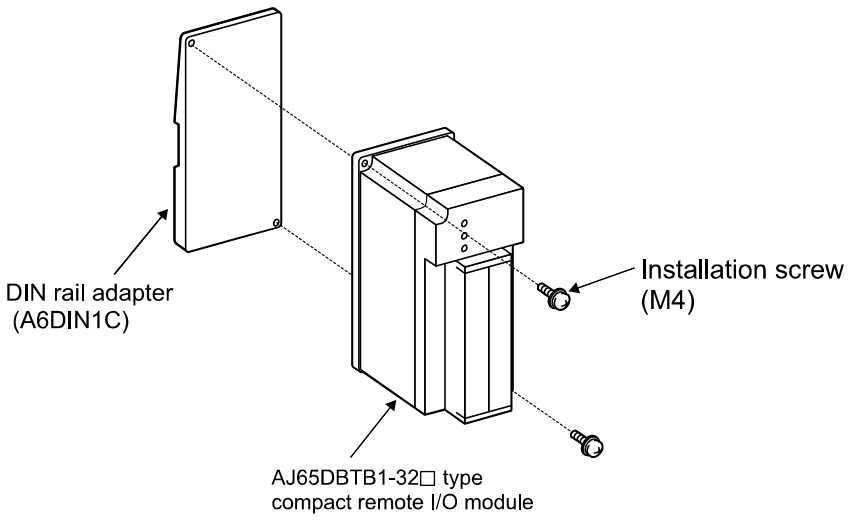

AbN
automation

7.10.4 Mounting the module to a DIN rail

This section describes how to mount/remove the module to/from a DIN rail.

(1) Mounting to a DIN rail

Mount the module with the DIN rail adapter attached to a DIN rail as follows.

(a) Insert the groove for DIN rail adapter into the topside of the DIN rail.

(b) Fix the module by pressing it against the DIN rail.

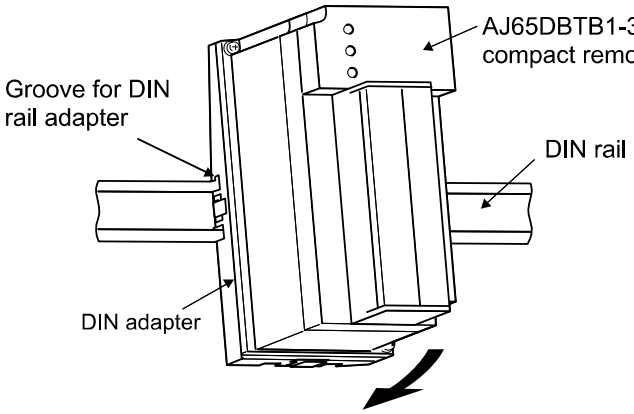

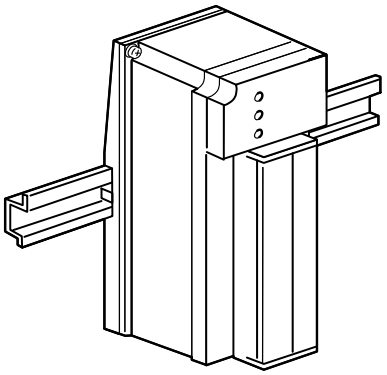

Installation status to the DIN rail

(c) When multiple DIN rail adapters are installed on the DIN rail, even though the gaps among DIN rail adapters are filled, the spaces of 4mm are left among the modules.

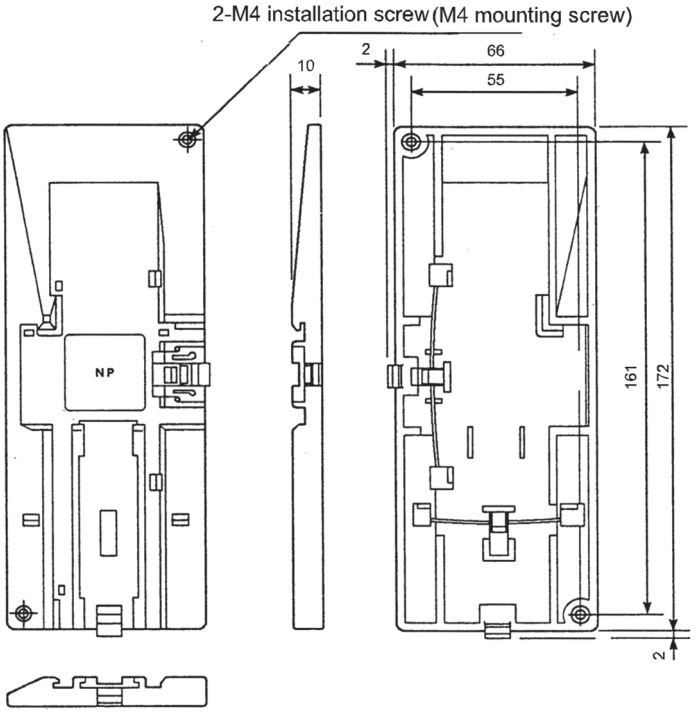

Unit: mm

7 - 40

(2) Removing the module from a DIN rail

Remove the module from a DIN rail as follows.

(a) Pull the hook at the bottom of the DIN adapter downward with flathead screwdriver (6 × 100).

(b) With the hook pulled out, pull the module forward and remove the module from the DIN rail.

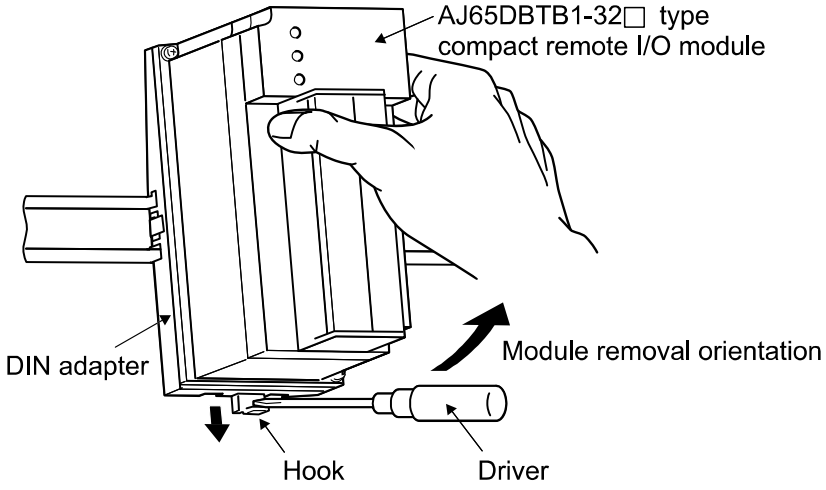

7 - 41

AbN
automation

7.11 Common Terminal Block

Item \ Model	A2CCOM-TB
Mountable module	AJ65DBTB1-32D, AJ65DBTB1-32T1, AJ65DBTB1-32R, AJ65DBTB1-32DT1, AJ65DBTB1-32DR
External dimensions	125mm × 64mm × 13mm
Weight	0.12kg

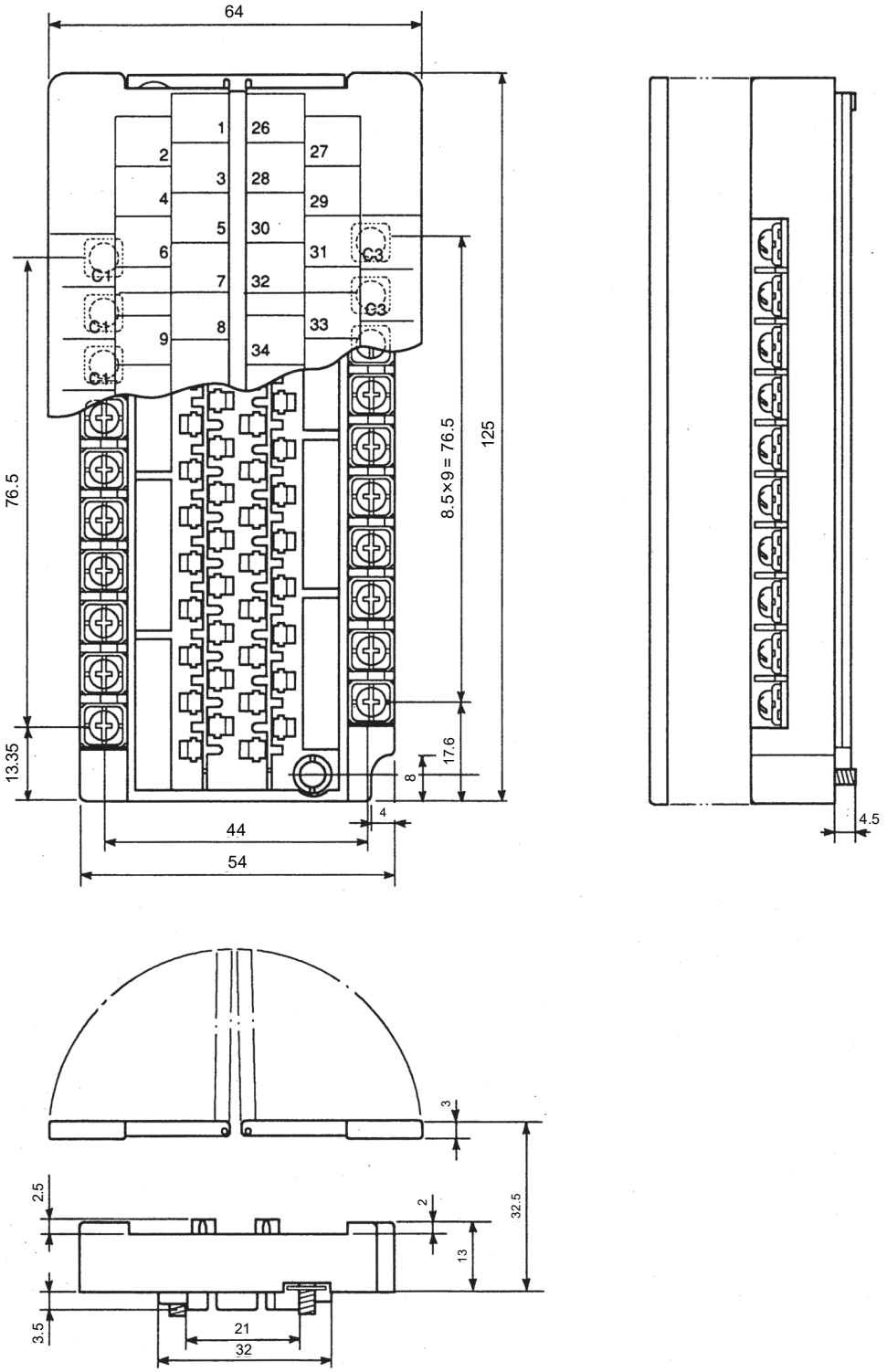

7 - 42

(1) Usage example of common terminal block

(a) Example of usage for input module, AJ65DBTB1-32D

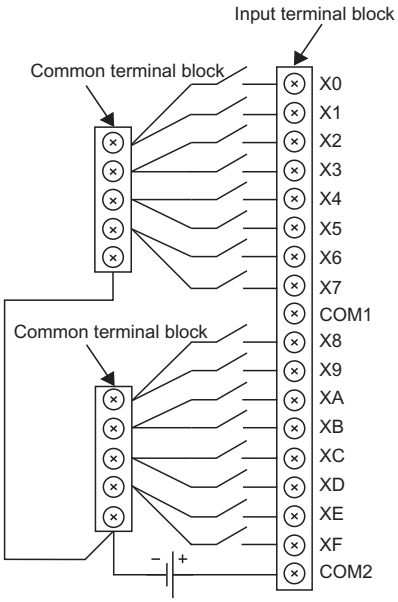

(b) Example of usage for output module, AJ65DBTB1-32R

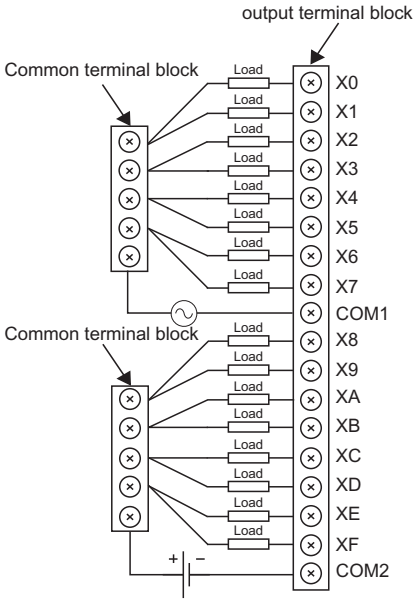

7 - 43

AbN
automation

MEMO

7 - 44

8 TROUBLESHOOTING

8.1 Verifying Errors from LED Status

The following table lists causes and corrective actions for errors indicated by LEDs on the compact remote I/O module when the SW, M/S and PRM LEDs are all off (i.e. the master module is set properly) in the system configuration example shown below.

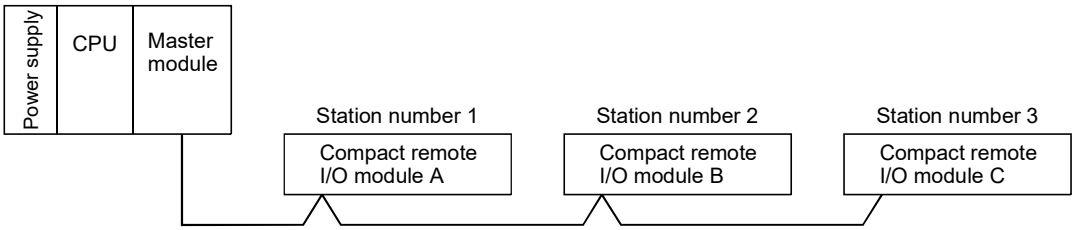

LED status				Cause	Corrective action
Master module	Remote I/O module				
	A	B	C		
	PW ● L RUN ● L ERR. ○	PW ● L RUN ● L ERR. ○	PW ● L RUN ● L ERR. ○	Normal	—
	PW ○ L RUN ○ L ERR. ○	PW ● L RUN ● L ERR. ○	PW ● L RUN ● L ERR. ○	Since the LEDs on the compact remote I/O module A are all off, the 24V power is not supplied or voltage is low.	Check the voltage of the 24V power supply, and supply the proper power to the compact remote I/O module.
	PW ＊ L RUN ＊ L ERR. ＊	PW ● L RUN ● L ERR. ○	PW ● L RUN ● L ERR. ○	The compact remote I/O module A is malfunctioning and the LEDs are unstable (all lights are off, in many cases).	Exchange the compact remote I/O module.
TIME ○ LINE ○ or TIME ● LINE ●	PW ● L RUN ● L ERR. ○	PW ● L RUN ○ L ERR. ○	PW ● L RUN ○ L ERR. ○	The L RUN lights on the compact remote I/O module B and beyond are off, indicating the transmission cable between the compact remote I/O module A and B has been disconnected or removed from the terminal block.	Identify the disconnected point by referring to the LED status, and correct it.
	PW ● L RUN ○ L ERR. ○	PW ● L RUN ○ L ERR. ○	PW ● L RUN ○ L ERR. ○	The transmission cable is shorted.	Find the shorted cable among the three transmission cables and repair it.
	PW ● L RUN ○ L ERR. ＊	PW ● L RUN ○ L ERR. ＊	PW ● L RUN ○ L ERR. ＊	The transmission cable is wired incorrectly.	Verify wiring in the terminal box of the compact remote I/O module and correct.
	PW ● L RUN ○ L ERR. ○	PW ● L RUN ● L ERR. ○	PW ● L RUN ○ L ERR. ○	The L RUN lights on the compact remote I/O modules A and C are off, indicating the station numbers for A and C are overlapping.	Restart the power supply after the overlapped station numbers for the compact remote I/O modules are corrected.

●: lit, ○: unlit, ◎ : flashing, ＊: lit, flashing or unlit

LED status				Cause	Corrective action
Master module	Remote I/O module A	Remote I/O module B	Remote I/O module C		
TIME ○ LINE ○ or TIME ● LINE ○	PW ● L RUN ● L ERR. ○	PW ● L RUN ○ L ERR. ○	PW ● L RUN ● L ERR. ○	The L RUN light on the compact remote I/O module B is off, indicating the transmission speed setting for module B is invalid within the setting range (0 to 4).	Restart the power supply after the transmission speed is set correctly.
	PW ● L RUN ● L ERR. ○	PW ● L RUN ● L ERR. ○	PW ● L RUN ● L ERR. ◎	The L ERR. of the compact remote I/O module C is flashing at fixed intervals, indicating the setting switch for module C has been changed during normal operation.	Return the setting switch of the compact remote I/O module to the original position.
	PW ● L RUN ○ L ERR. ●	PW ● L RUN ● L ERR. ○	PW ● L RUN ● L ERR. ○	The L RUN of the compact remote I/O module A is off and L ERR. of the same module is lit, indicating the setting switch for module A is set out of range (transmission speed: 5 to 9, station number: 65 or greater).	Correct the setting switch of the compact remote I/O module, and restart the power supply.
TIME ● LINE ● or TIME ○ LINE ●	PW ● L RUN ● L ERR. ○	PW ● L RUN ● L ERR. ●	PW ● L RUN ● L ERR. ○	The L ERR. of the compact remote I/O module B is lit, indicating that module B is being affected by noise. (L RUN may be off.)	Correctly perform grounding of the FGs for the master module and all compact remote I/O modules.
	PW ● L RUN ● L ERR. ○	PW ● L RUN ● L ERR. ●	PW ● L RUN ● L ERR. ●	The L ERR. lights on the compact remote I/O module B and beyond are lit, indicating the transmission cable is affected by noise in the area between modules A and B. (L RUN may be off.)	Verify the grounding of the SLD of the transmission cable. Separate the wire from the power cable as much as possible (100mm or more).
	PW ● L RUN ● L ERR. ○	PW ● L RUN ● L ERR. ○	PW ● L RUN ● L ERR. ●	A terminal resistor is not attached. (L RUN may be off.)	Check if a terminal resistor is attached.

●: lit, ○: unlit, ◎: flashing, ∗: lit, flashing or unlit

POINT

The L RUN may be flashing irregularly due to noise or a wiring failure.
Check for noise effects or wiring failures.

8 - 2

8.2 Examples of Errors for Compact Remote I/O Modules

This section explains examples of errors that occur in the input circuit, and the appropriate corrective actions.

8.2.1 Errors occurring in the input circuit and corrective actions

Examples of errors that occur in the input circuit and corrective actions are explained below:

	Error status	Cause	Corrective action
Example 1	Input signals do not turn off.	• Activation via the LED display switch. 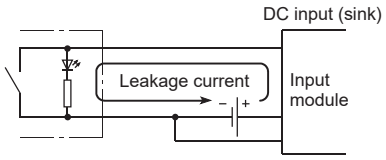	• Connect an appropriate resistor as shown below so that the current flowing along the input module becomes lower than OFF current. 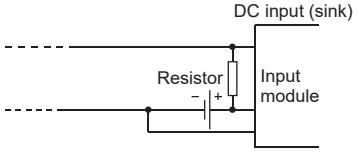 * A calculation example used to obtain the resistance value to be connected is shown on the following page.
Example 2	Input signals do not turn off.	• Sneak current due to the use of two power supplies 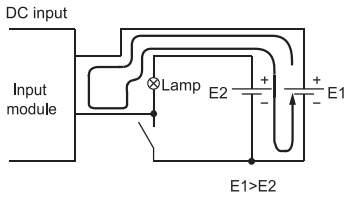	• Use only one power supply. • Connect a diode to prevent a sneak current as shown below. 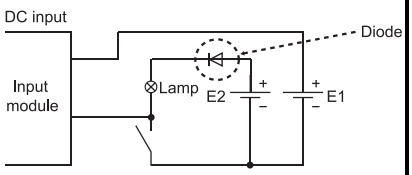
Example 3	Input signals do not turn off.	• Input switch leakage current (driving with a contactless switch). 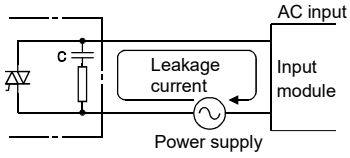	• Connect the appropriate resistor so that the terminal-to-terminal voltage of the input module is below the OFF voltage value. 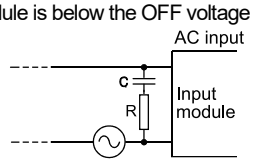 0.1 to 0.47μF + 47 to 120Ω (1/2W) is recommended for the CR constant.
Example 4	Input signals do not turn off.	• Driving using a limit switch with neon lamp. 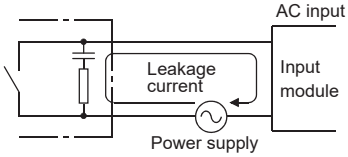	• Same as Example 3. • Or, create a completely separate display circuit.
Example 5	Input signals do not turn off.	• Leakage current due to line capacity of the wiring cable. The line capacity "C" of a twisted pair wire is about C=100PF/m. 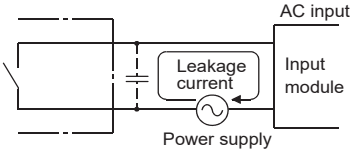	• Same as Example 3. • However, this problem will not occur if the power supply as shown below is provided at the input device side. 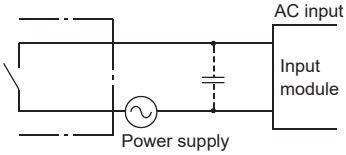

8 - 3

AbN
automation

<Sample calculation for Example 1>

When a switch with LED indicator, giving leakage current of 3mA at maximum when 24VDC power is supplied to the AJ65SBTB1-16D

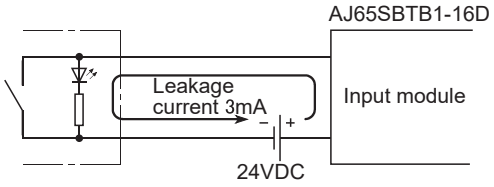

(1) 1.7mA or less OFF current of the AJ65SBTB1-16D is not satisfied. Hence, connect a resistor as shown below.

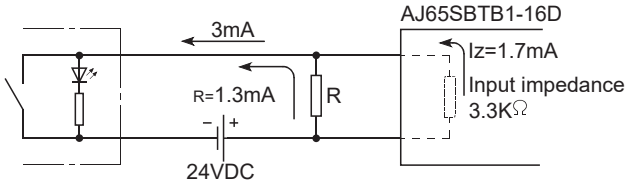

(2) Calculate the resistance value R as shown below.
To satisfy 1.7mA or less OFF current of the AJ65SBTB1-16D, connect a resistor which flows 1.3mA or more.

I_R: I_Z=Z (Input impedance): R

$$R \leqq \frac{I_Z}{I_R} \times Z \text{ (Input impedance)} = \frac{1.7}{1.3} \times 3.3 = 4.31[k\Omega]$$

Supposing that the resistance R is 3.9kΩ, the power capacity W of resistor R is:
W = (Input voltage) 2 ÷ R = 26.42 ÷ 3900 = 0.179 (W)

(3) Connect a resistor of 3.9 (kΩ) and 1 to 2 (W) to a terminal which may cause an error, since the power capacity of a resistor is selected so that it will be 3 to 5 times greater than the actual power consumption.

(4) Also, OFF voltage when resistor R is connected will be as follows.

$$\frac{1}{\frac{1}{3.9[k\Omega]} + \frac{1}{3.3[k\Omega]}} \times 3[mA] = 5.36[V]$$

This satisfies 6V or less OFF voltage of AJ65SBTB1-16D.

8 - 4

8.2.2 Errors occurring in the output circuit and corrective action

Examples of errors that may occur in the output circuit and the respective corrective action are described below.

(1) When AJ65SBTB1-16T or AJ65SBTB1-32T is used

<table>
<tr><th></th><th>Condition</th><th>Cause</th><th>Corrective action</th></tr>
<tr><td>Example 1</td><td>When an LED is connected as a load, sometimes the LED dimly lights up even when the output module is turned off.
(Example) LED push button manufactured by IDEC CORPORATION: ALFN22211DNR
 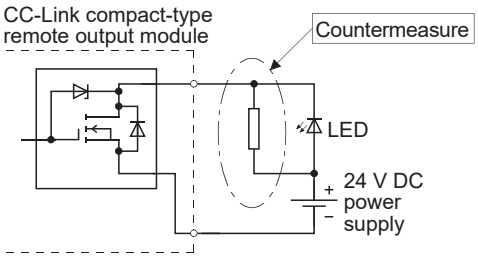
</td><td rowspan="2">For the output modules listed below, the output module specification and the leak current specification value during OFF are 24VDC 0.5A and 0.25mA, respectively (the leak current during OFF is specified as above since an MOS with a built-in protection function and PET transistor output are used.)
<Applicable modules>
AJ65SBTB1-16T, AJ65SBTB1-32T</td><td>Connect a resistor with 5 to 50kΩ in parallel to the load LED.</td></tr>
<tr><td>Example 2</td><td>When a segment LED display device is connected as a load, the display contents sometimes become incorrect.
(Example) M7E digital display unit (height of character 14mm) by Omron, Co.: M7E-01DBN2
 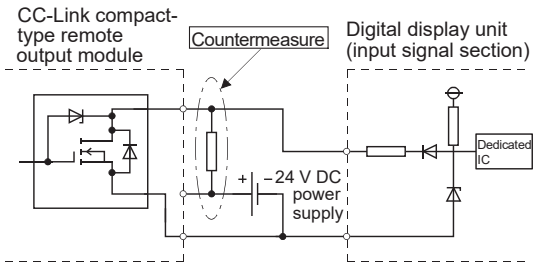
</td><td>Connect a pull-up resistor with 5 to 50kΩ and 0.5(W) between the 24VDC power supply and the output module output.</td></tr>
</table>

8 - 5

AbN
automation

(2) When AJ65SBTB2(N)-8S or AJ65SBTB2(N)-16S is used

	Condition	Cause	Corrective action
Example 1	Excessive voltage is applied to the output OFF load.	• The load is half-wave rectified internally. (Some solenoids do this process.) 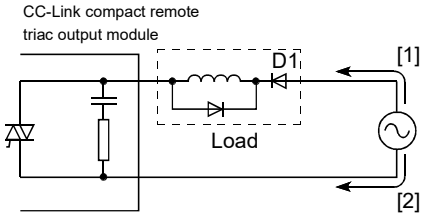 • When the polarity of the power supply is [1], C is charging. When the polarity is [2], the voltage charged in C + power supply voltage is applied to both ends of D1. The maximum value of the voltage is about 2.2E.	• Connect a resistor of several tens KΩ to several hundreds KΩ to both ends of the load. When this type of method is used, no problems will occur in the output elements, but the diode that is built in the load may deteriorate and may be damaged. 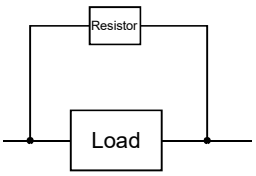
Example 2	The load is not turned OFF. (Triac output)	• Leakage current due to built-in surge suppressor. 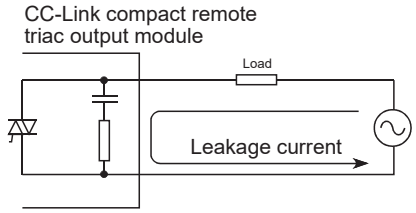	• Connect a resistor to both ends of the load. Caution is required when the wiring distance from the output card to the load is long, since there may be leakage current due to the line capacity. 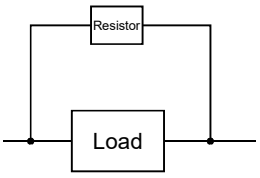
Example 3	Time limit changes when the load is a CR type timer. (Triac output)	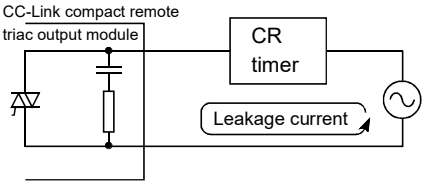	• Drive the relay first, and then drive the CR type timer at that contact. Caution is required as indicated in Example 1 since the internal circuit may be half-wave rectified depending on the timer. 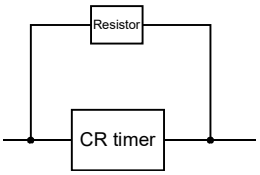 Calculate the resistor constant according to the load.

8 - 6

	Condition	Cause	Corrective action
Example 4	The load is not turned OFF. (Triac output)	• If the load current is insufficient (lower than 25mA), the triac does not operate, causing the load current to flow into a phototriac as shown below. If an inductive load is connected in this condition, the load may not turn off because surge at the time of off is applied to the phototriac. 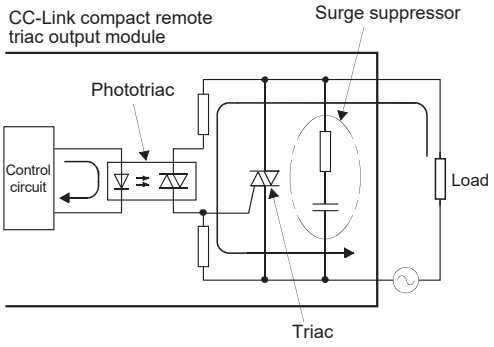	• Connect a resistor to both ends of a load so that the load current is higher than the minimum load current. 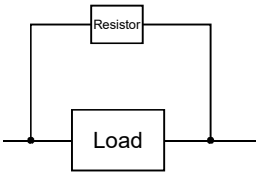

8 - 7

AbN
automation

(3) When AJ65AJ65SBTB1-8T, AJ65SBTB2-8T, AJ65SBTB1-16T, AJ65SBTB2-16T, AJ65SBTB1-32T, AJ65SBTC1-32T, AJ65SBTB32-8DT, AJ65SBTB1-16DT, AJ65SBTB1-16DT1, AJ65SBTB32-16DT, AJ65SBTB1-32DT, AJ65SBTB1-32DT1, AJ65SBTC4-16DT, AJ65SBTC1-32DT, AJ65SBTC1-32DT1, or AJ65SBTW4-16DT is used

	Condition	Cause	Corrective action
Example 1	The load does not turn Off.	When the load built into the capacitor is connected to the external load, a resonance may occur due to the inductor of the wiring and the load of the capacitor. This may lead to reverse current in output transistor. Due to the reverse current, the protection circuit for output transistor might operate, and the outputs might not be turned on. Note: Such as SSR (Solid state relay) may incorporate a capacitor for countermeasures against noise, etc. When the situation above occurs, confirm if a capacitor is incorporated to the manufacturer. 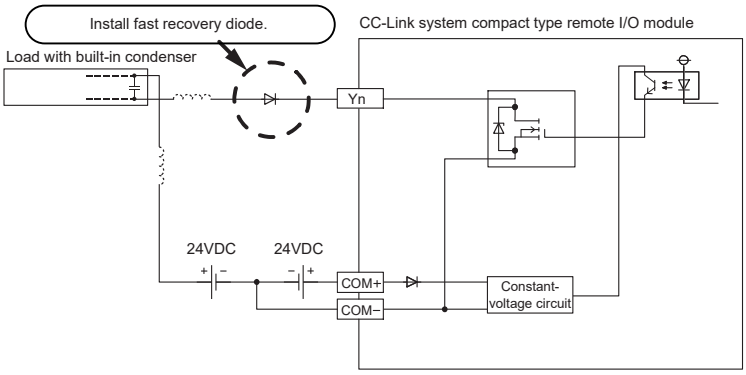	• Install fast recovery diode (1A, 100V or more) in series with the external load.

8 - 8

(4) When output module, combined module is used

<table>
<tr><th></th><th>Condition</th><th>Cause</th><th>Corrective action</th></tr>
<tr><td>Example 1</td><td>When the external power supply turns on, the load turns on for a moment.</td><td>Erroneous output due to the stray capacitance (C) between collector and emitter of photocoupler.
(There is no erroneous output at normal load. An erroneous output may occur at high sensitivity load (such as solid state relay))
 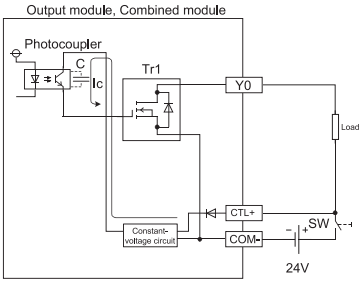

(1) If the external power supply is turned on precipitously, Ic current flows due to the stray capacitance (C) between collector and emitter of photocoupler.
(2) Ic current flows to the next stage of transister Tr1 gate and Y0 output turns on by 100μs
 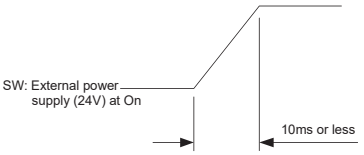

 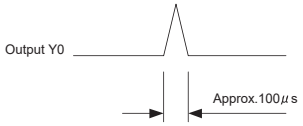
</td><td>(1) When the external power turns ON/OFF, check that the external power supply rising edge must be 10ms or more, and switch the SW1 to the primary side of external power supply.
 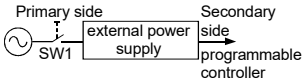

(2) When switching to the secondary side of the external power supply is required, the external power supply rising edge connected a condenser must be slow, and measured 10ms or more.
Sink output
 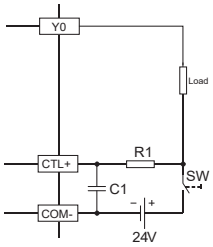

Source output
 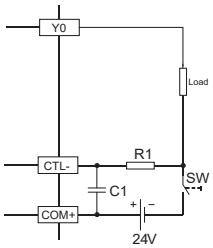

* The measures are ineffective in the following modules due to the characteristic of the external power supply circuit
• AJ65SBTB1-8TE
• AJ65SBTB1-16TE

R1: Several tens of ohms

Power capacity ≧ (external power supply current*1)^2
×resistance value
×(3 to 5)*2

C1: several hundreds of microfarads 50V
*1 Refer to consumption current of the external power supply for modules used in this manual.
*2 Select the power capacity of resistance to be 3 to 5 times lager than the actual power consumption.

(Example)
R1=40 Ω, C1=300 μF
Use the below expression to calculated a time constant
C1×R1=300×10^{-6}×40
=12×10^{-3}s
=12ms</td></tr>
</table>

AbN
automation

	Condition	Cause	Corrective action
Example 2	The load which was turned OFF is turned ON for a moment at power-off. (Transistor output)	The load [2] which was turned OFF may be turned ON due to back electromotive force at the time of power-off [1] if an inductive load is used. 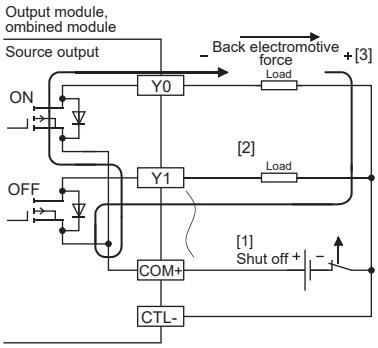 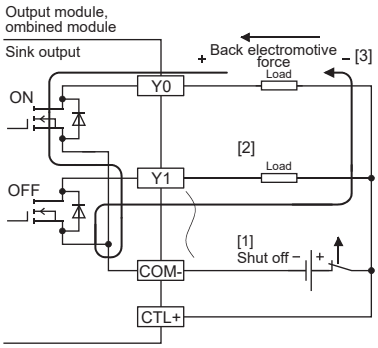	Take action in the following (1) or (2). (1) To prevent the generation of the back electromotive force, connect diode in parallel with load where the back electromotive force has been generated. Source output [3] 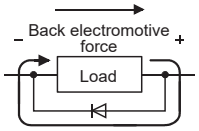 Sink output [3] 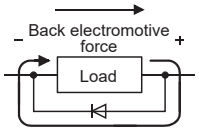 (2) Install a diode between the positive and negative external power supply to allow an electric current to pass another current path. When the corrective action shown in the example 1 is taken simultaneously, the diode must be installed in parallel with the C1 and R1. 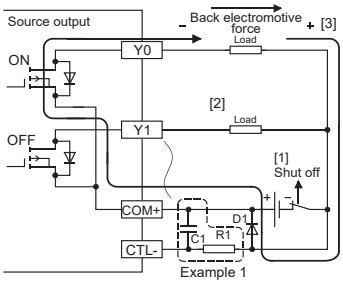 * The measures are ineffective in the following modules due to the characteristic of the external power supply circuit • AJ65SBTB1-8TE • AJ65SBTB1-16TE 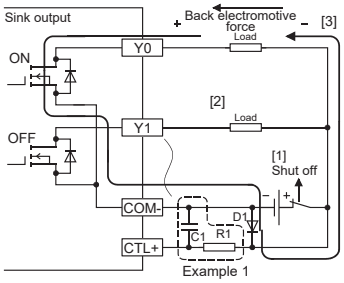 D1: Reverse voltage VR (VRM)…*1, Forward current IF (IFM)…*2 *1 Approximately 10times higher than the rated voltage in the specifications Example: 24VDC→Approximately 200V *2 More than twice as much as the maximum load current (common) in the specifications Example: 2A/1 common→4A or more

8 - 10

	Condition	Cause	Corrective action
Example 3	The load operates due to powering on the external power supply. (transistor output)	The polarity of the external power supply is connected in reverse. 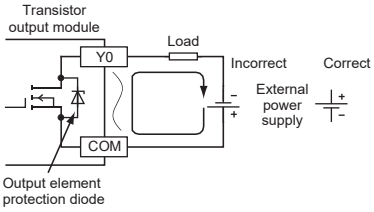 When the polarity is connected in reverse, current may flow across an output element protection diode.	Connect the polarity correctly.
Example 4	When an output is turned on, a load connected to the other output is also turned on. (transistor output (source type))	If the wire connecting 0V of an external power supply and a common of a load is cut off or disconnected, the load connected to Y1 is also turned on due to a parasitic circuit of the output element that is off. 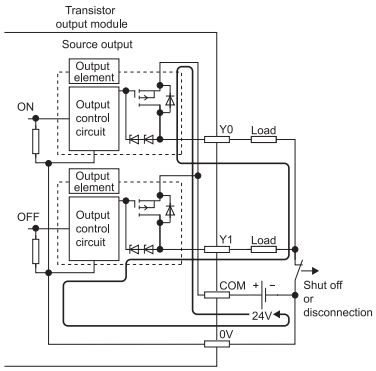 If a current keeps flowing under the above condition, a failure may occur.	Connect the external power supply and loads correctly. To prevent the condition described on the left, connect a diode to each output terminal as shown below. 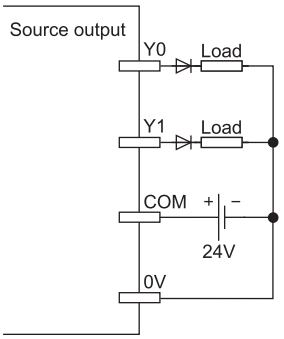

8 - 11

APPENDICES

Appendix 1 External Dimensions

Appendix 1.1 AJ65SBTB1-8□ remote I/O module

The external dimensions for the AJ65SBTB1-8□ remote I/O module are shown below.

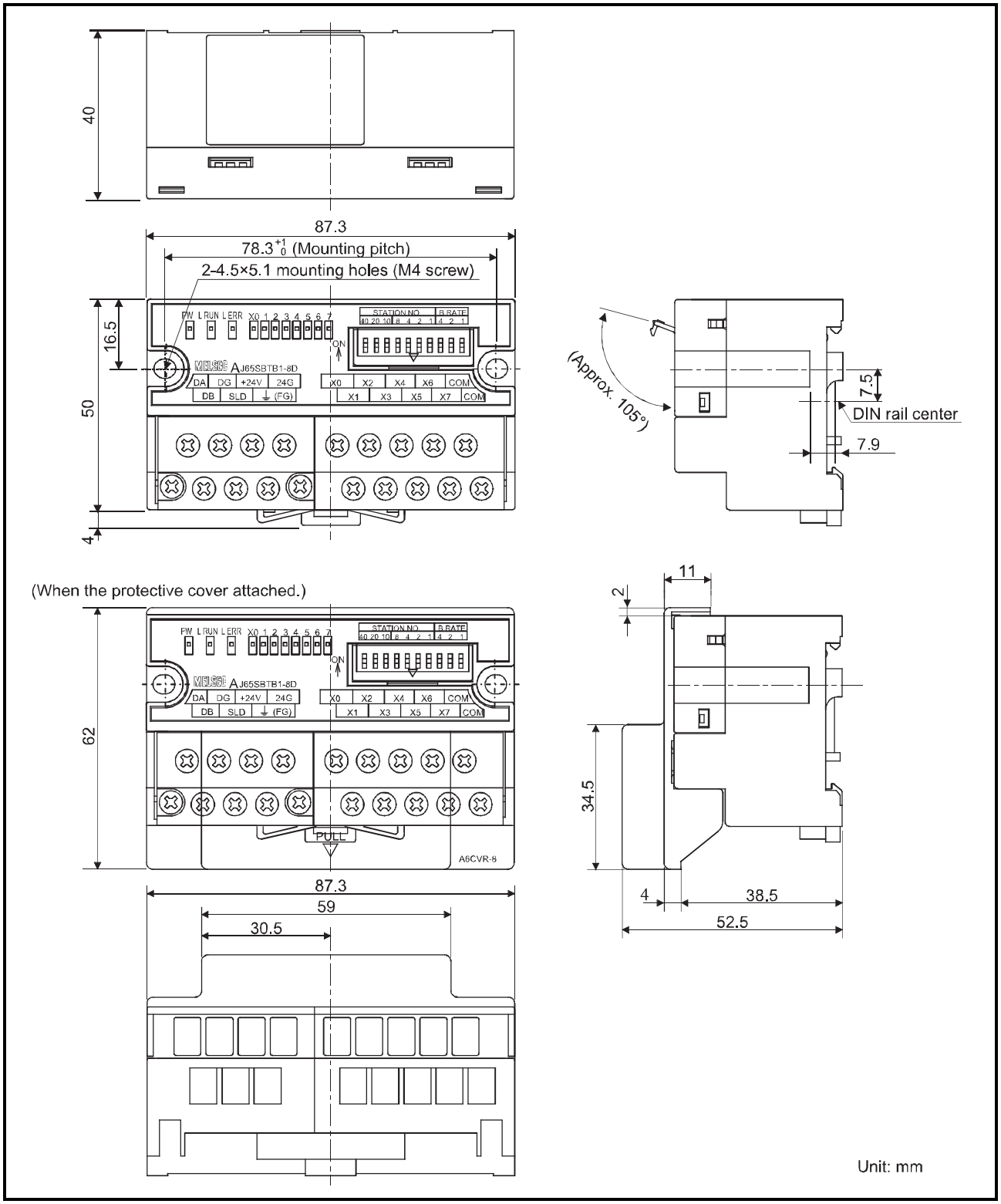

A

Appendix 1.2 AJ65SBTB1-16□ remote I/O module

The external dimensions for the AJ65SBTB1-16□ remote I/O module are shown below.

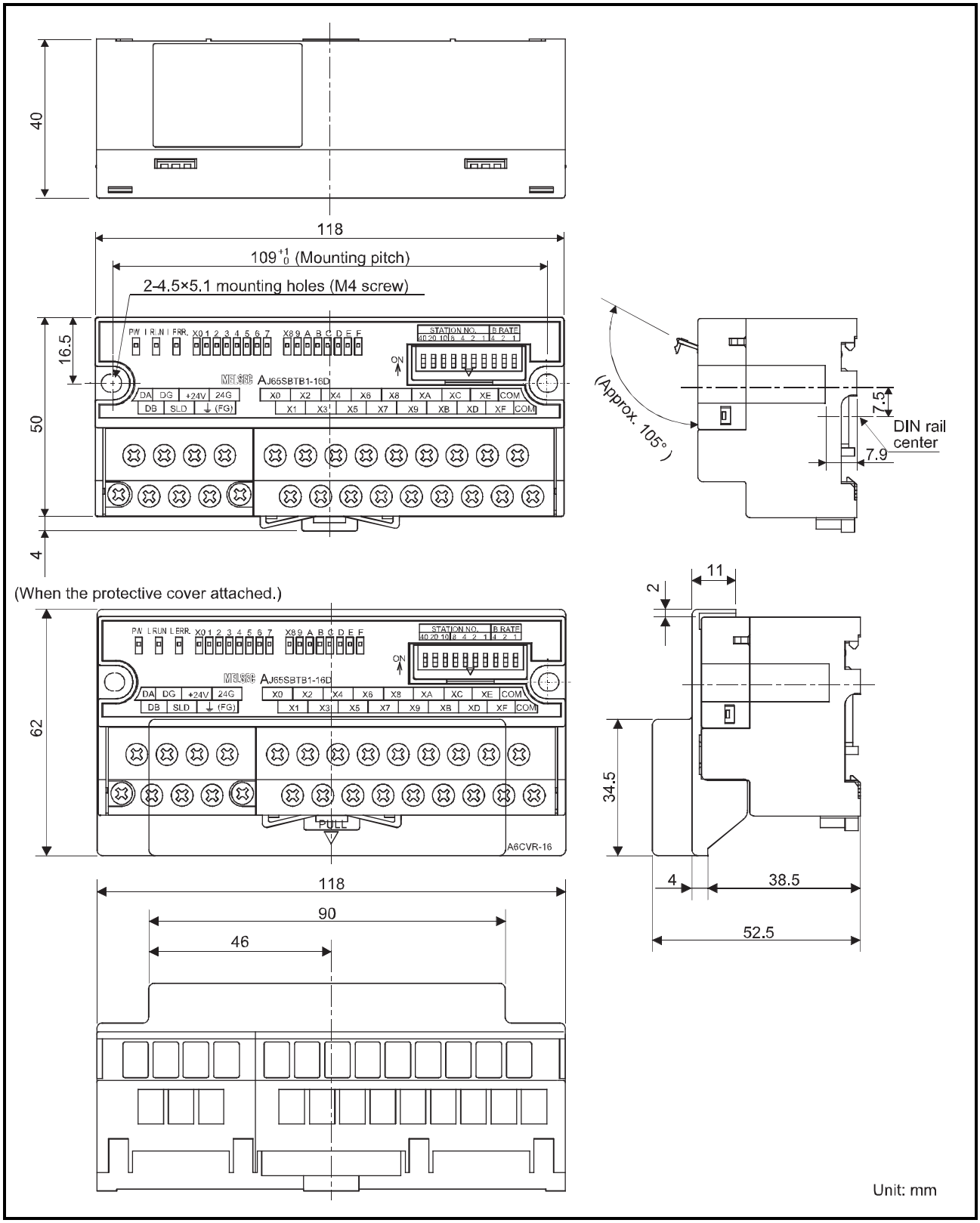

A

Remark

For AJ65SBTB1-16D, AJ65SBTB1-16T Remote I/O Module of hardware version D or before, side face diagram of the module is as follows.

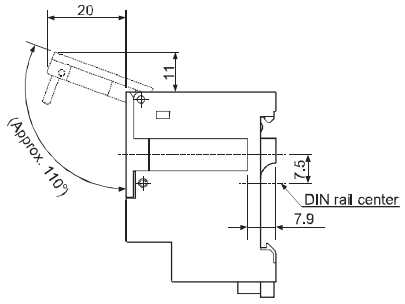

Appendix 1.3 AJ65SBTW4-16☐ remote I/O module

The external dimensions for the AJ65SBTW4-16☐ remote I/O module are shown below.

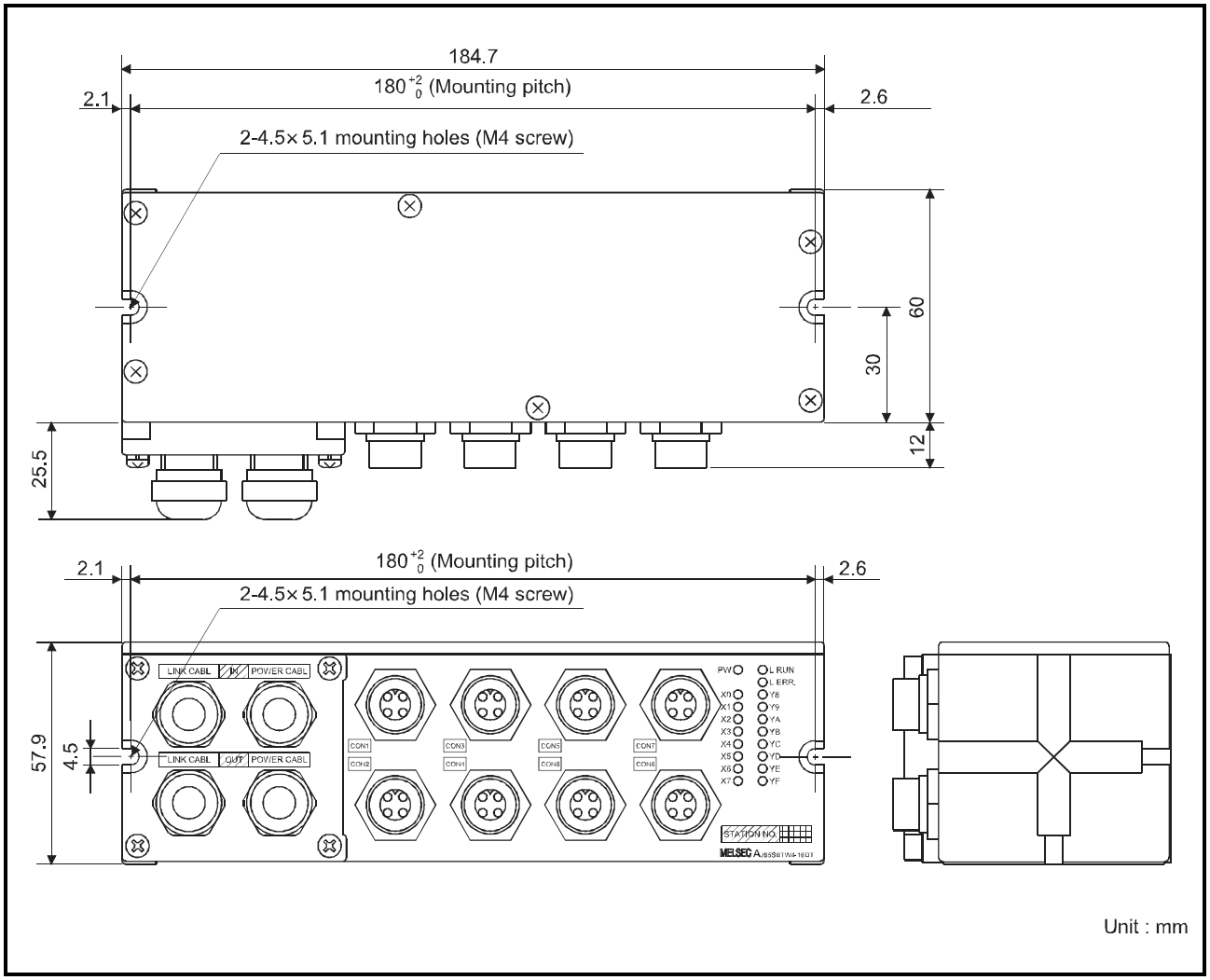

App - 4

Appendix 1.4 AJ65SBTB1-32☐ remote I/O module

The external dimensions for the AJ65SBTB1-32☐ remote I/O module are shown below.

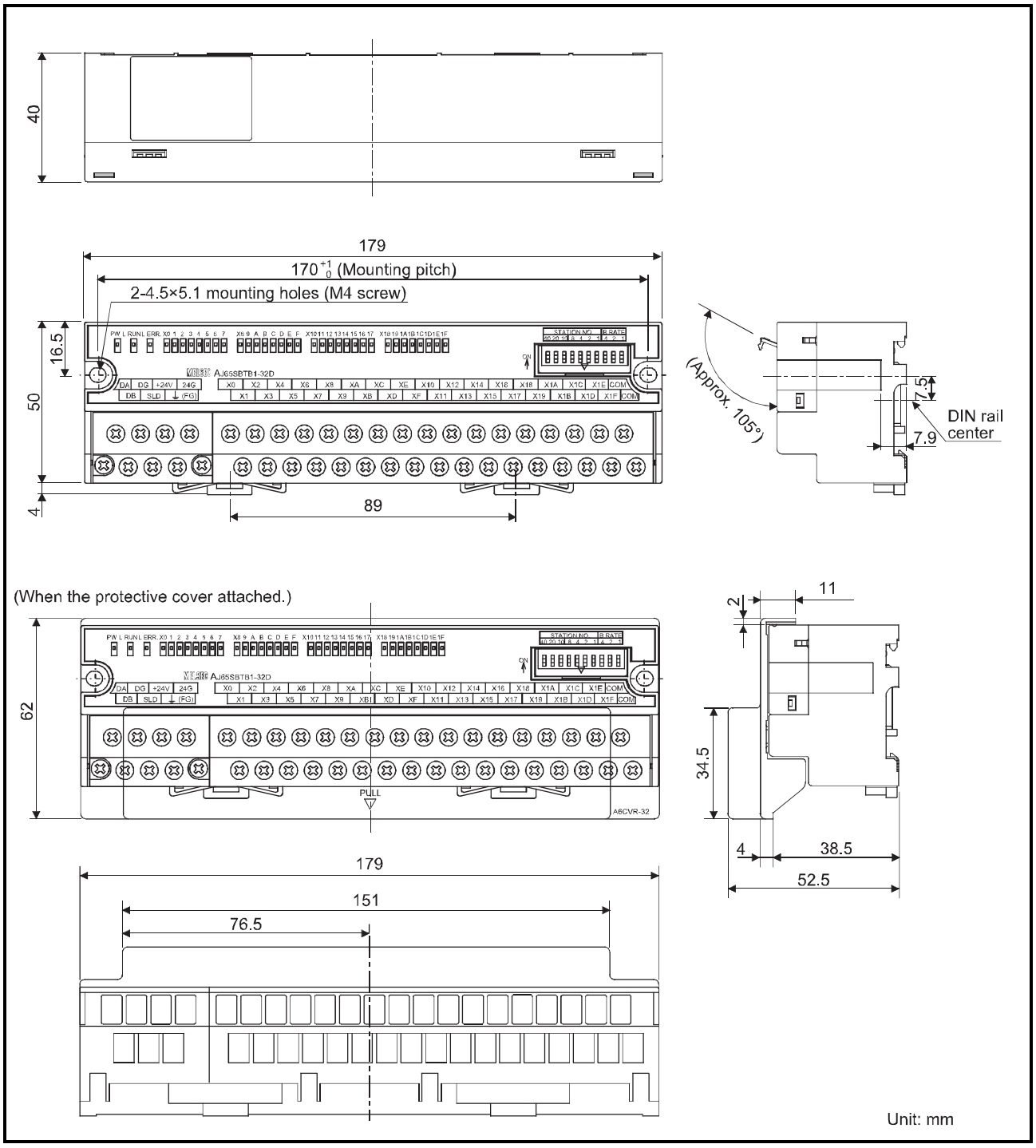

App - 5

Remark

For AJ65SBTB1-32D, AJ65SBTB1-32T Remote I/O Module of hardware version D or before, side face diagram of the module is as follows.

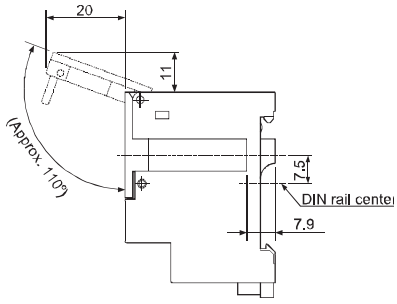

App - 6

Appendix 1.5 AJ65SBTC1-32□, and AJ65SBTC4-16□ remote I/O module

The external dimensions for the AJ65SBTC1-32□, and AJ65SBTC4-16□ remote I/O modules are shown below.

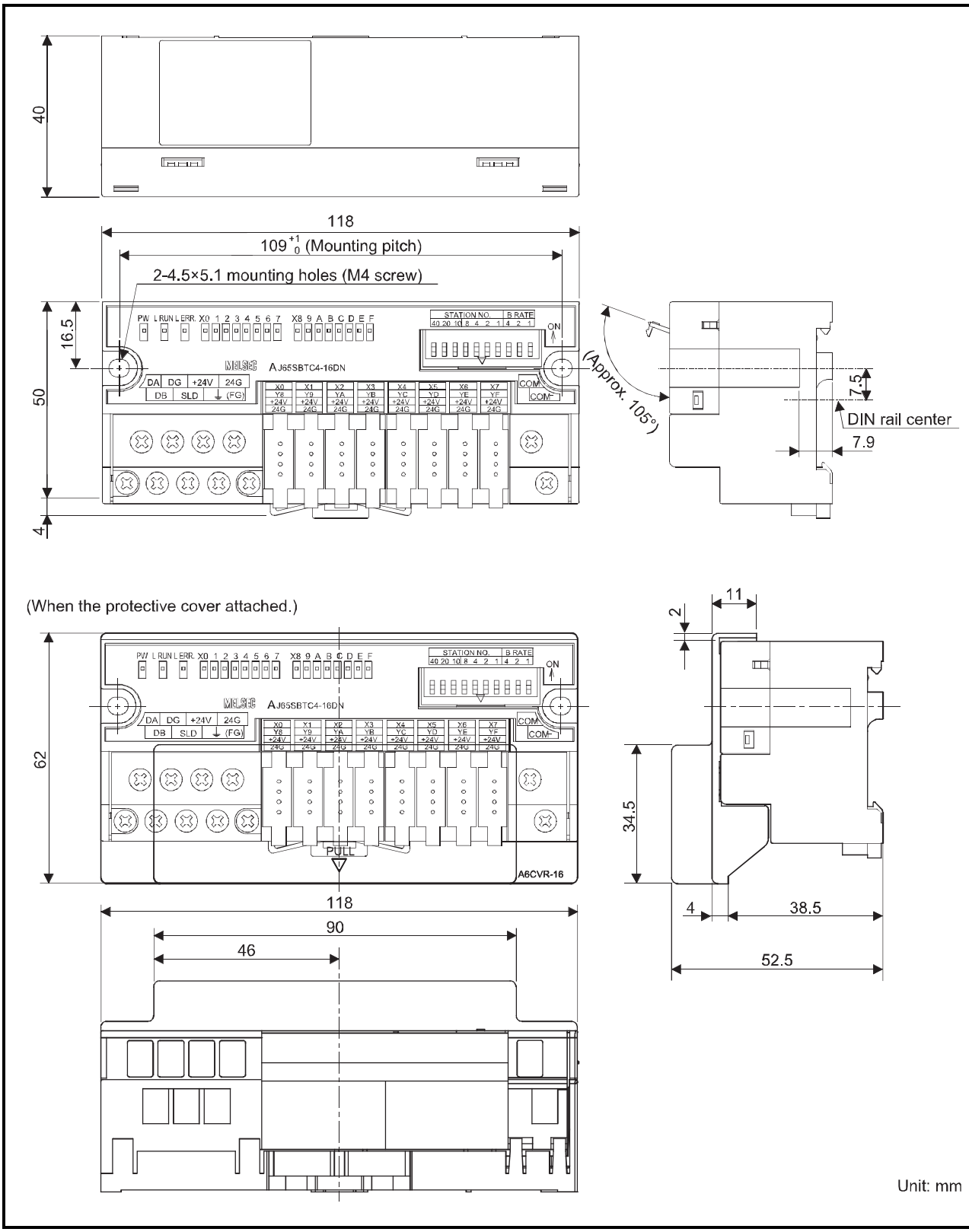

Remark

(1) For the AJ65SBTC4-16D remote I/O module, the side view of the module is shown below.

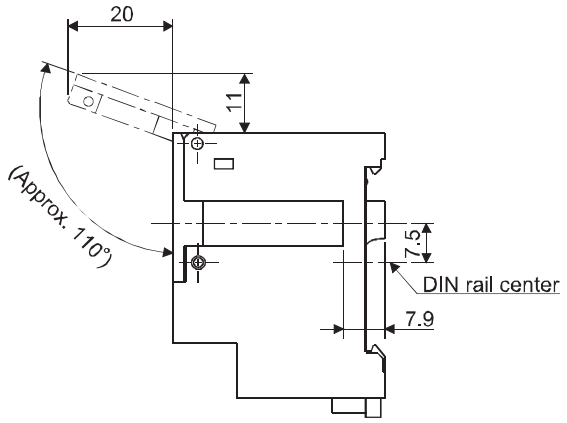

(2) For the modules given in the following table, the side view is shown below.

Model	Hardware Version
AJ65SBTC1-32D	N or before
AJ65SBTC1-32D1	N or before
AJ65SBTC1-32T	Q or before
AJ65SBTC1-32T1	E or before
AJ65SBTC1-32DT	Q or before
AJ65SBTC1-32DT1	Q or before
AJ65SBTC1-32DT2	D or before
AJ65SBTC1-32DT3	D or before
AJ65SBTC4-16DT	J or before
AJ65SBTC4-16DT2	C or before

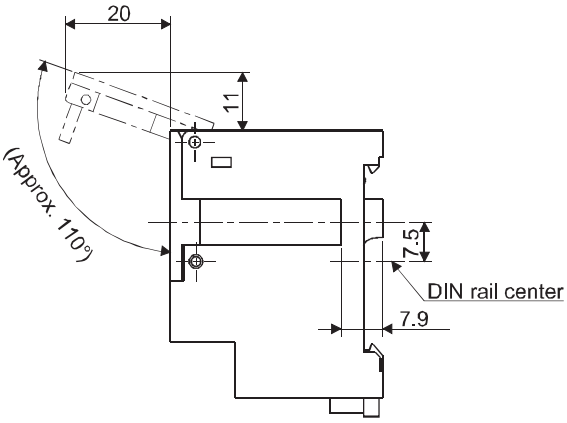

Appendix 1.6 AJ65SBTCF1-32□ remote I/O module

The external dimensions for the AJ65SBTCF1-32□ remote I/O module are shown below.

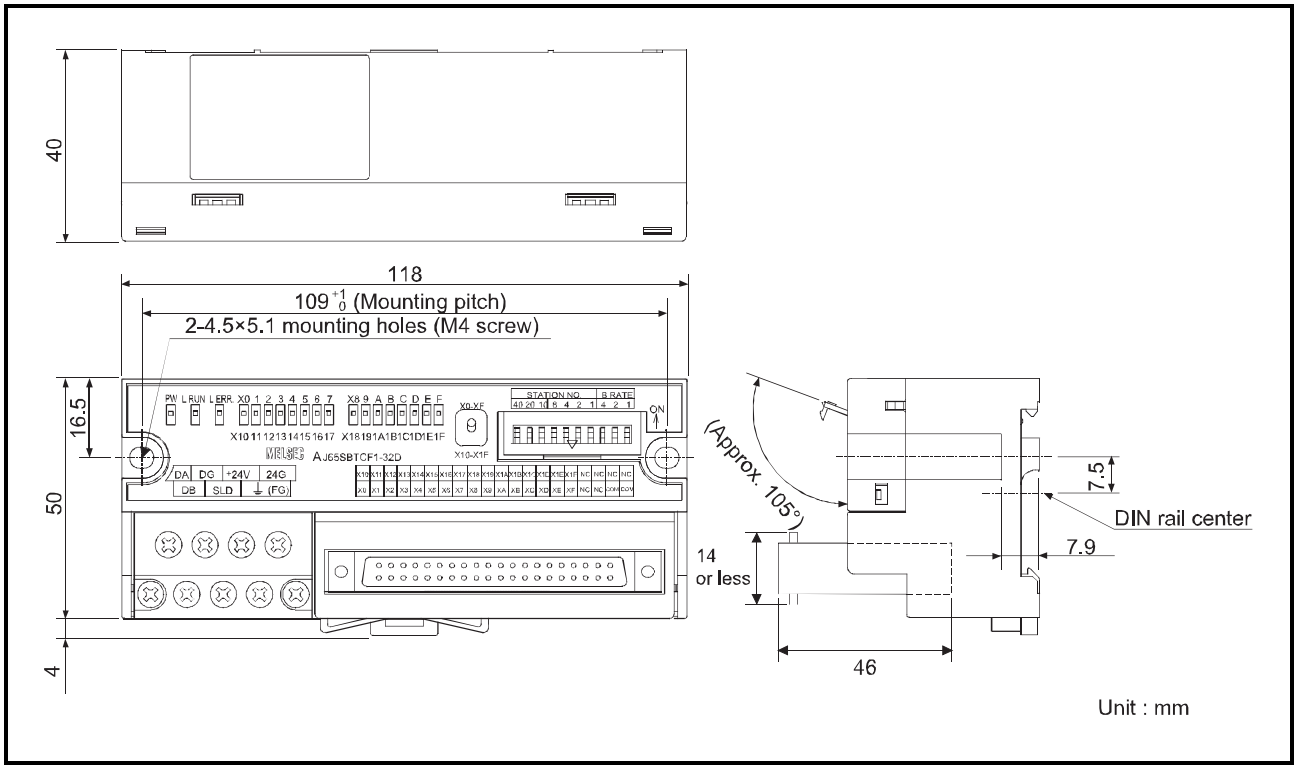

Remark

For the modules given in the following table, the side view is shown below.

Model	Hardware Version
AJ65SBTCF1-32D	F or before
AJ65SBTCF1-32T	F or before
AJ65SBTCF1-32DT	F or before

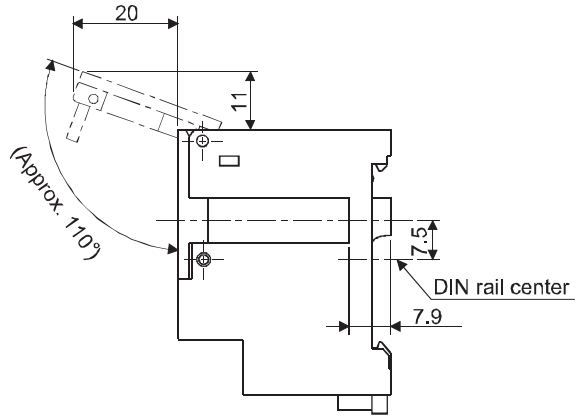

App - 9

Appendix 1.7 AJ65SBTB2-8□, AJ65SBTB3-8□, and AJ65SBTB32-8□ remote I/O module

The external dimensions for the AJ65SBTB2-8□, AJ65SBTB3-8□, and AJ65SBTB32-8□ remote I/O modules are shown below.

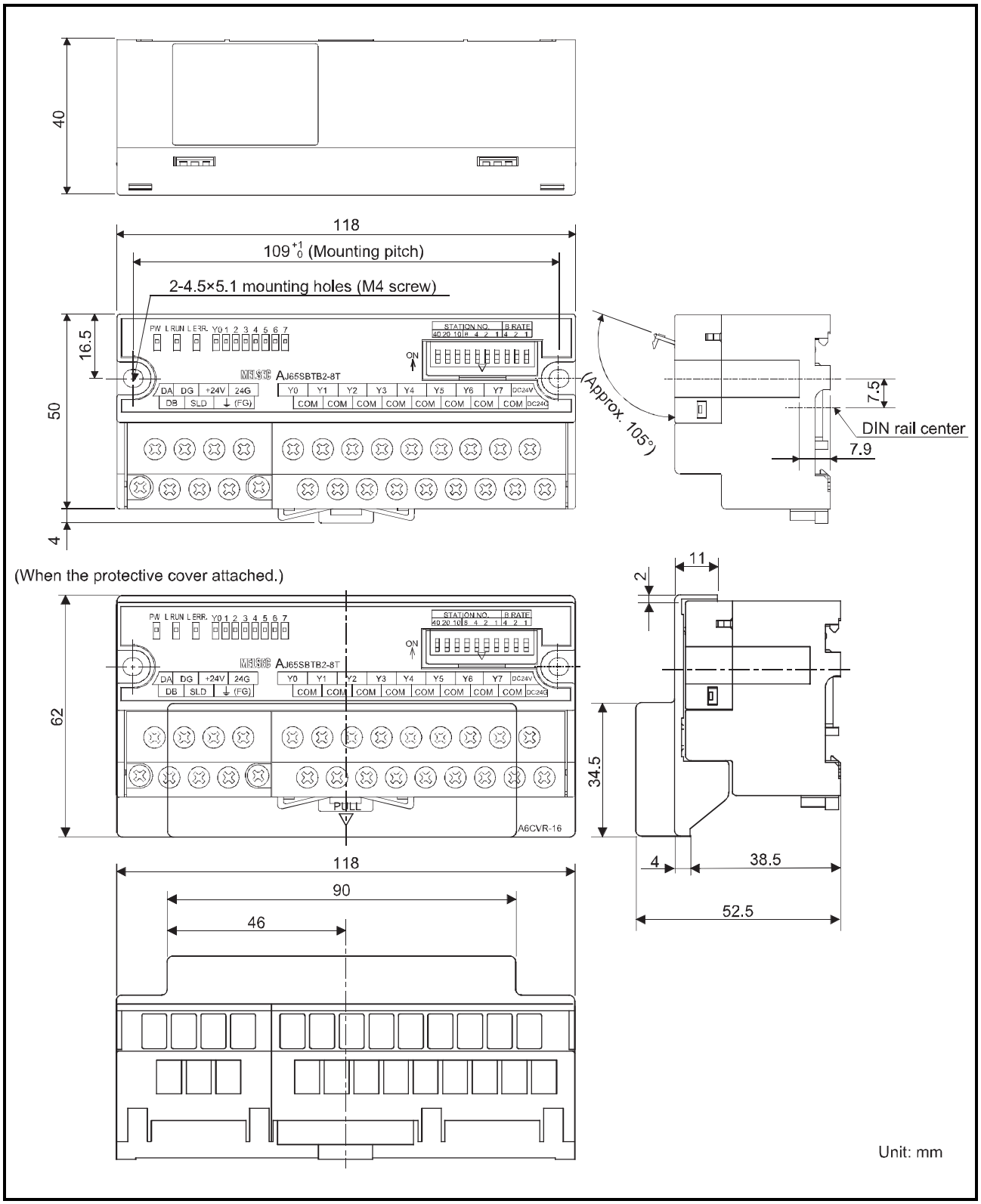

App - 10

Appendix 1.8 AJ65SBTB1B-16□, AJ65SBTB2-16□, AJ65SBTB3-16□, and AJ65SBTB32-16□ remote I/O module

The external dimensions for the AJ65SBTB1B-16□, AJ65SBTB2-16□, AJ65SBTB3-16□, and AJ65SBTB32-16□ remote I/O modules are shown below.

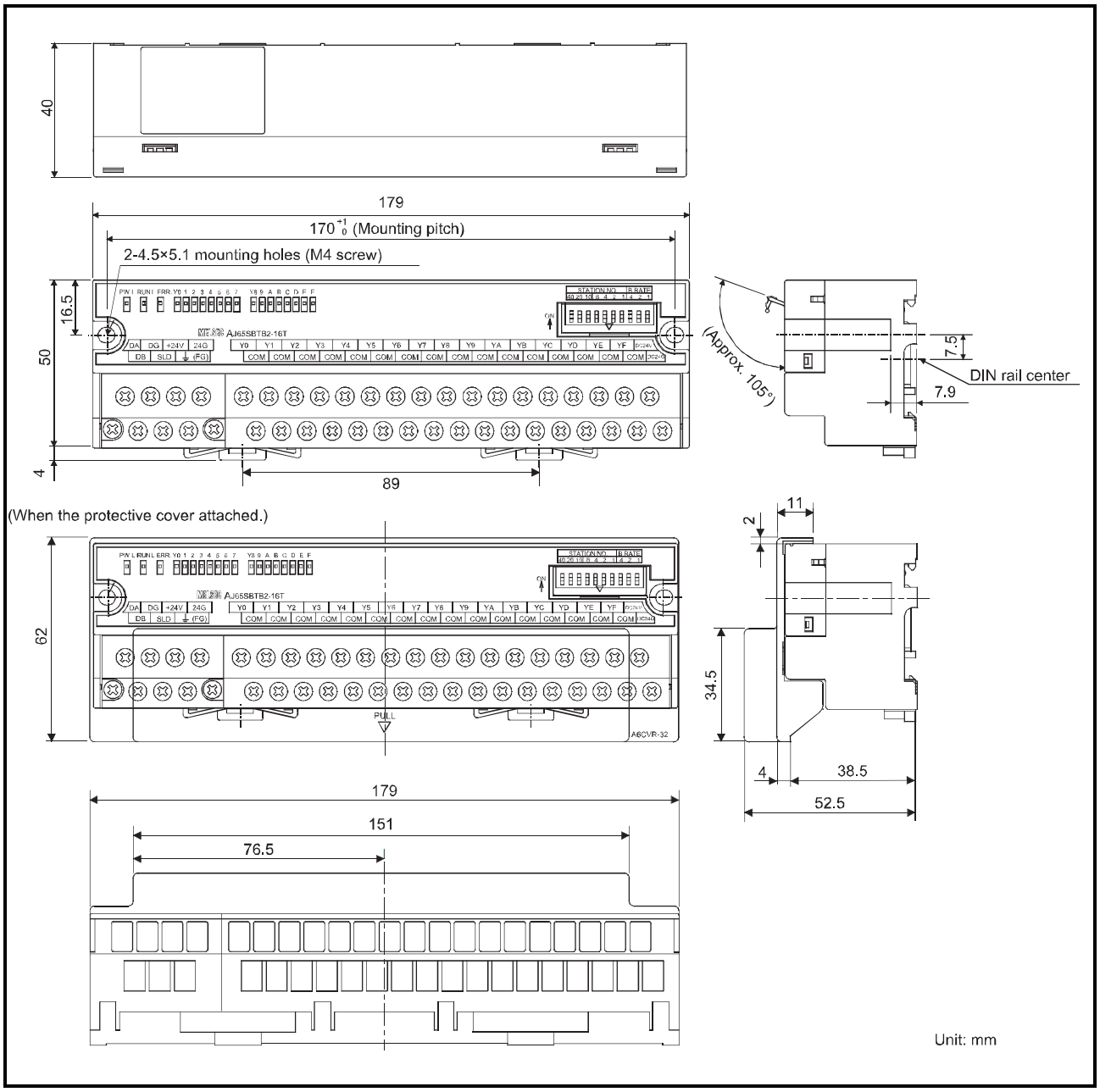

App - 11

Appendix 1.9 AJ65SBTB2N-8□ remote I/O module

The external dimensions for the AJ65SBTB2N-8□ remote I/O module are shown below.

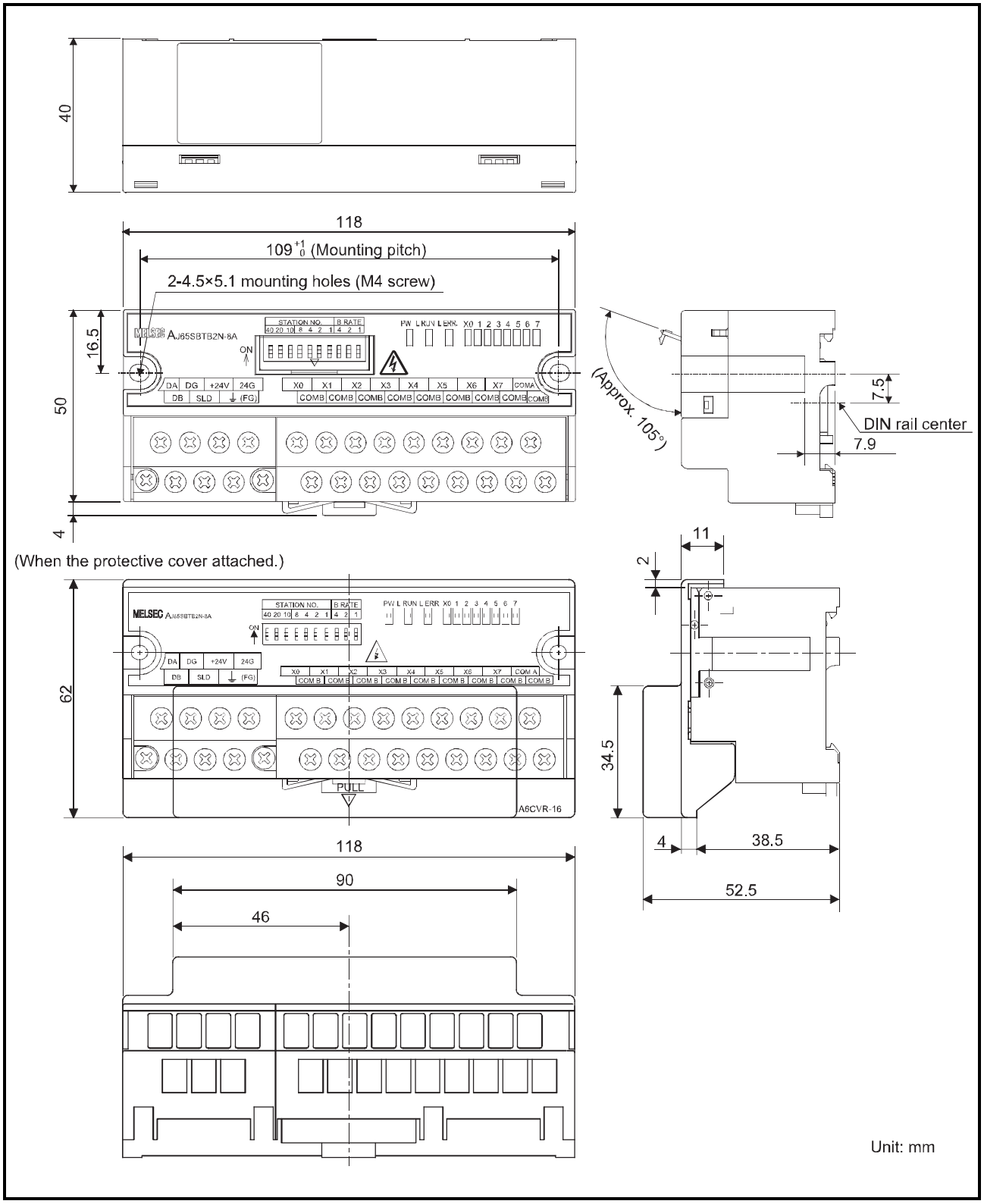

App - 12

Appendix 1.10 AJ65SBTB2N-16☐ remote I/O module

The external dimensions for the AJ65SBTB2N-16☐ remote I/O module are shown below.

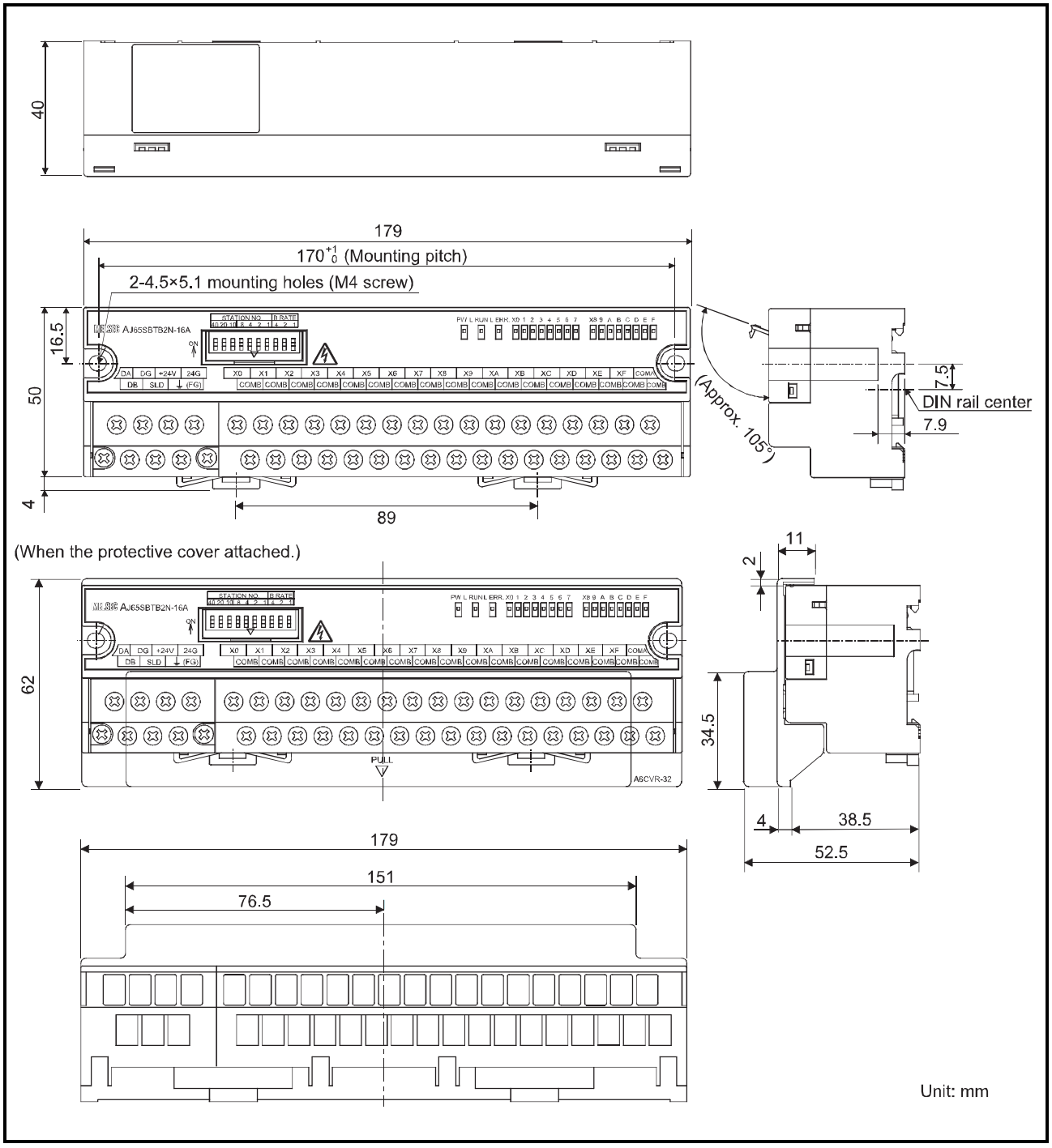

App - 13

Appendix 1.11 AJ65VBTCU□-8□, AJ65VBTCU□-16□, and AJ65VBTCF1-32□ remote I/O module

The external dimensions for the AJ65VBTCU□-8□, AJ65VBTCU□-16□, and AJ65VBTCF1-32□ remote I/O modules are shown below.

AJ65VBTCU□-8□

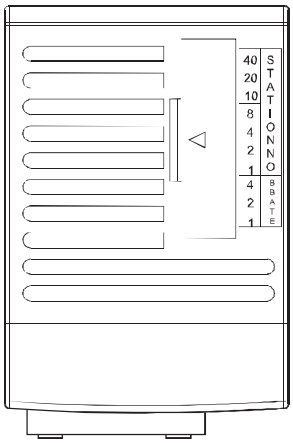

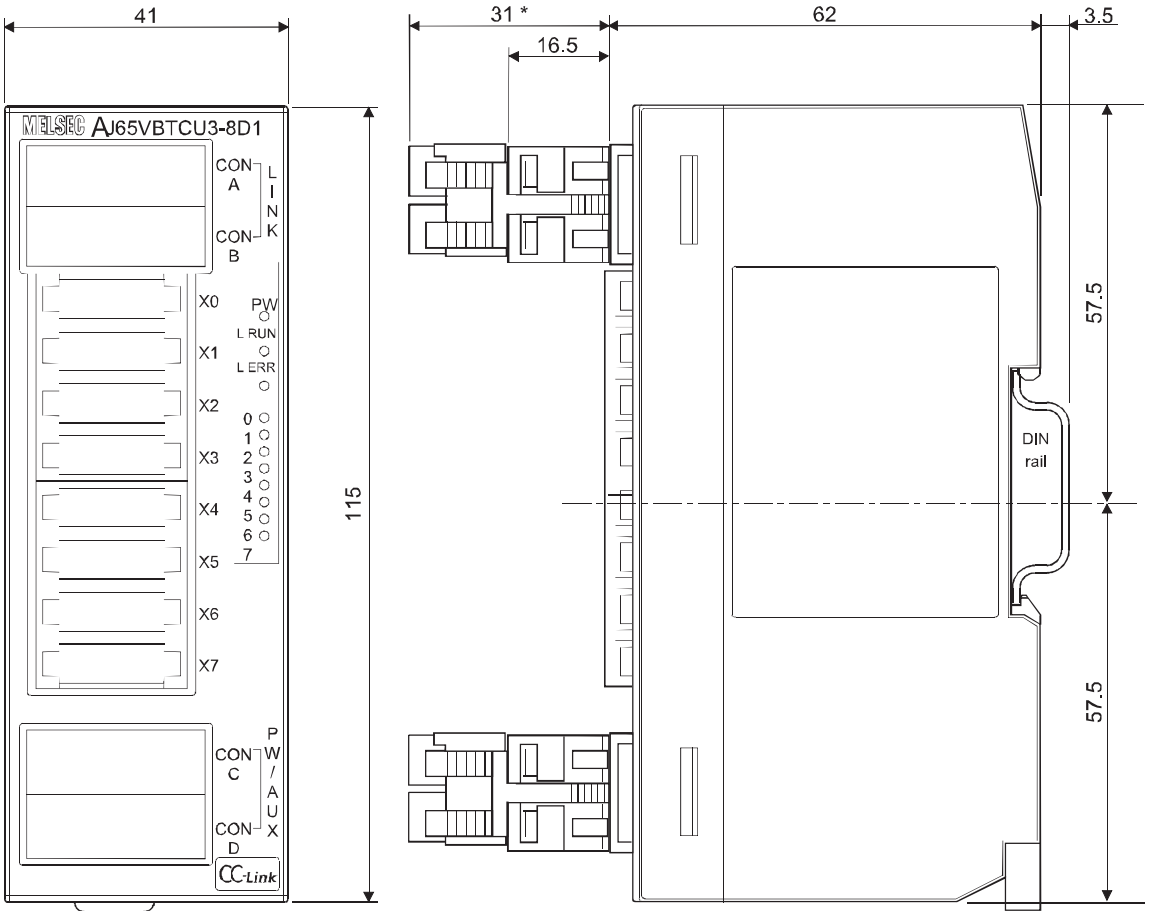

Unit: mm

*: This section should be 14.5mm when an online connector is not installed.

App - 14

AJ65VBTCU□-16□

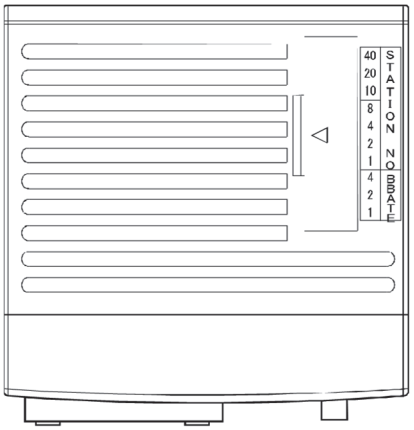

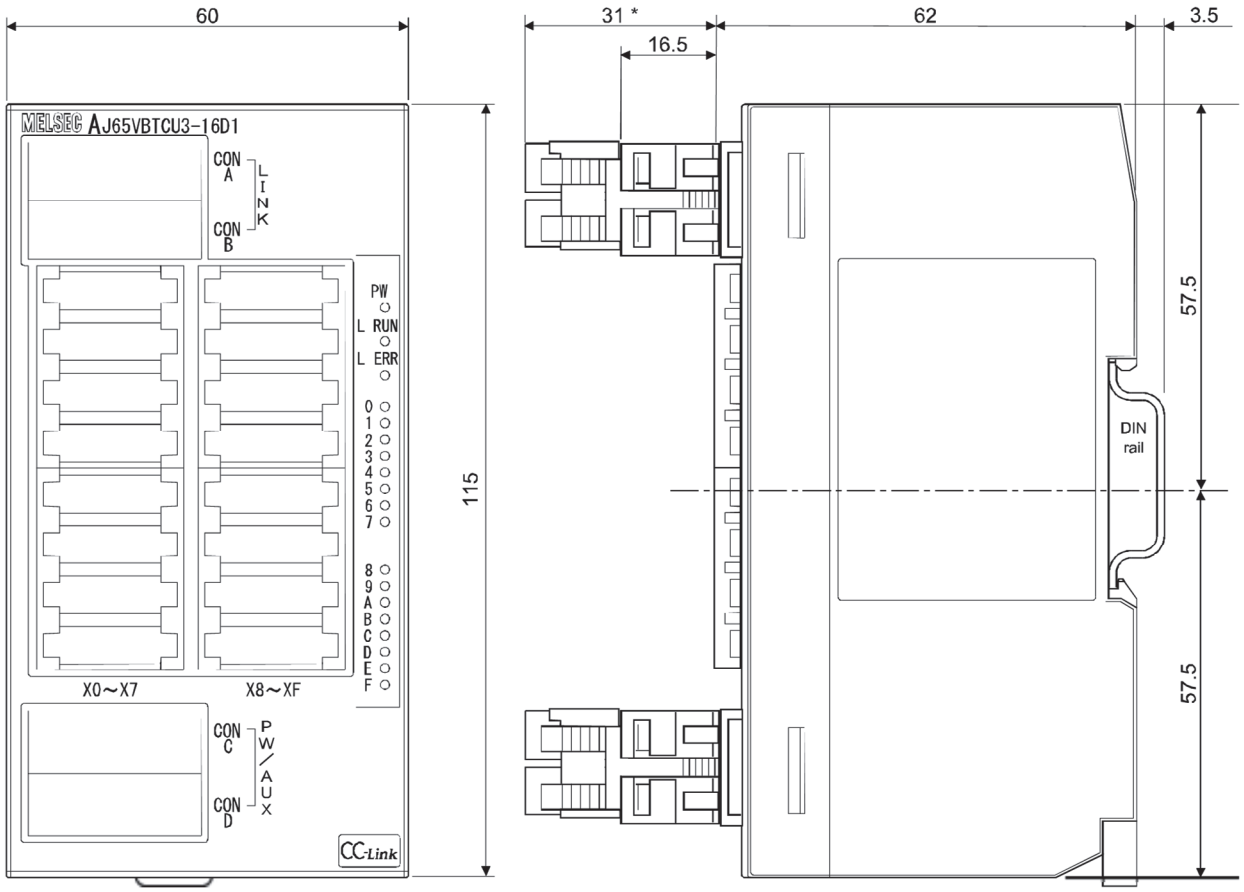

Unit: mm

*: This section should be 14.5mm when an online connector is not installed.

App - 15

AJ65VBTCF□1-32□

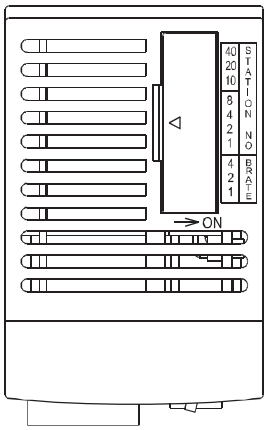

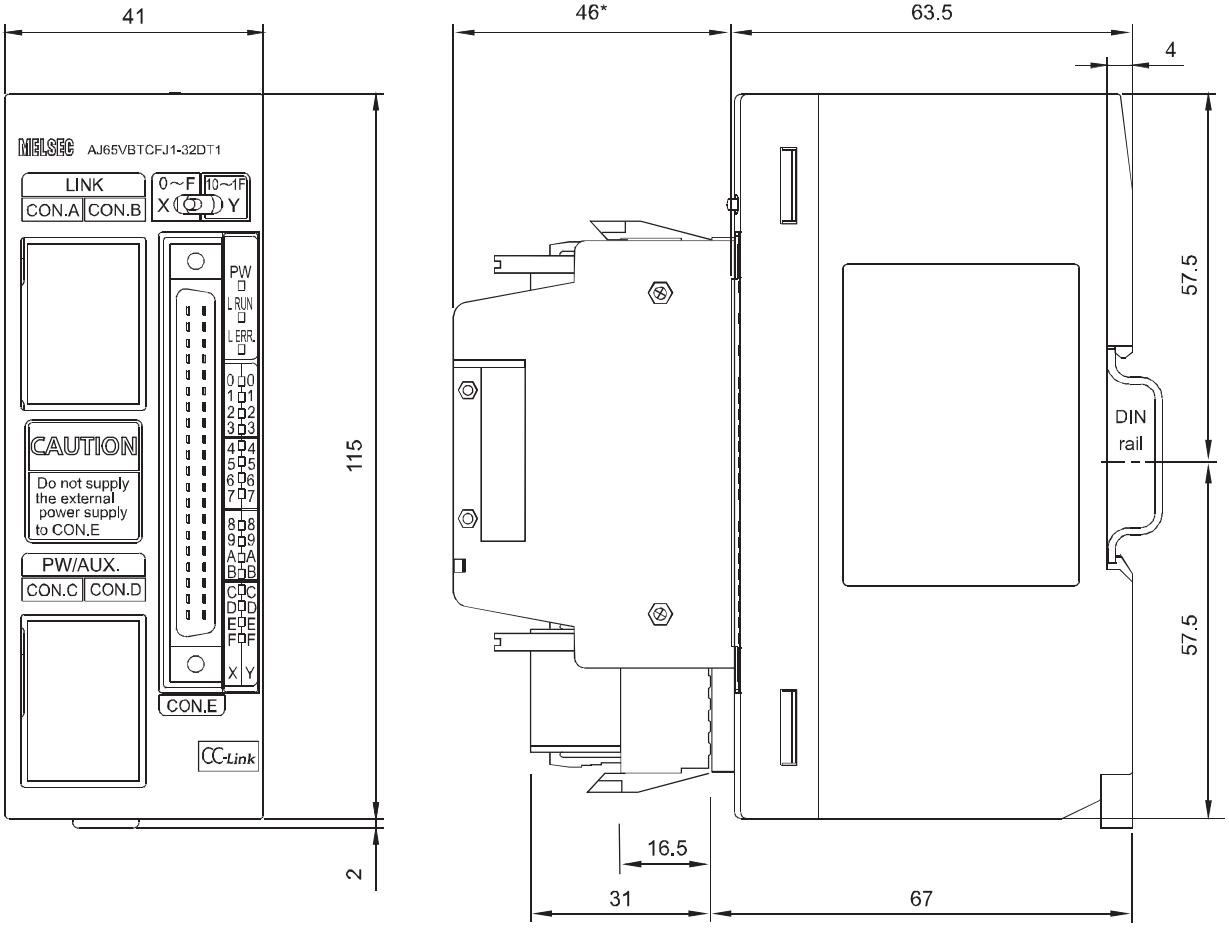

Unit: mm

*: This section should be 14.5mm when an online connector is not installed.

App - 16

Appendix 1.12 AJ65FBTA□-16□ remote I/O module

The external dimensions for the AJ65FBTA□-16□ remote I/O modules are shown below.

AJ65FBTA□-16□

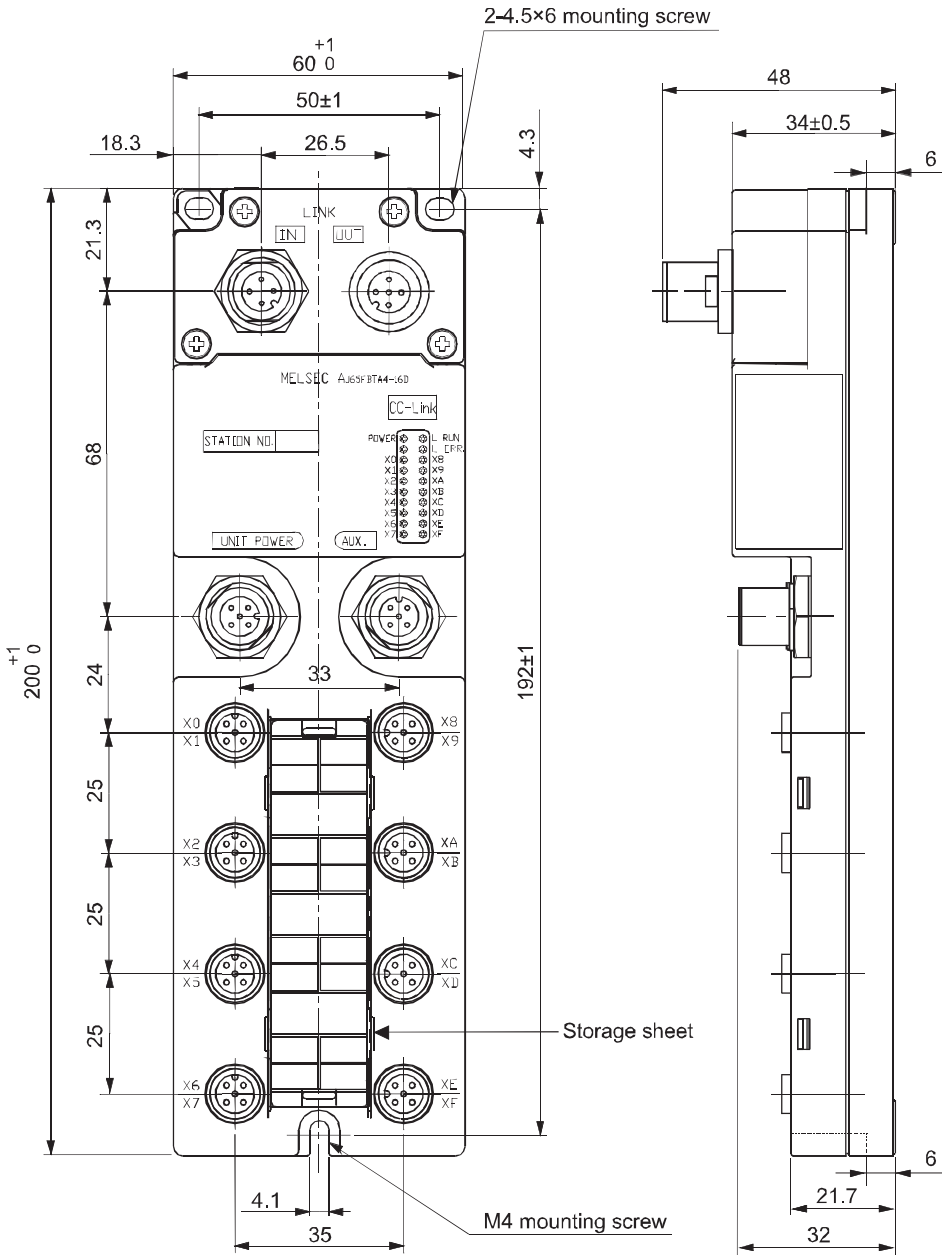

Unit: mm

App - 17

Appendix 1.13 AJ65VBTS□-16□, and AJ65VBTS□-32□ remote I/O module

The external dimensions of the AJ65VBTS□-16□, and AJ65VBTS□-32□ remote I/O modules are shown below.

AJ65VBTS□-16□

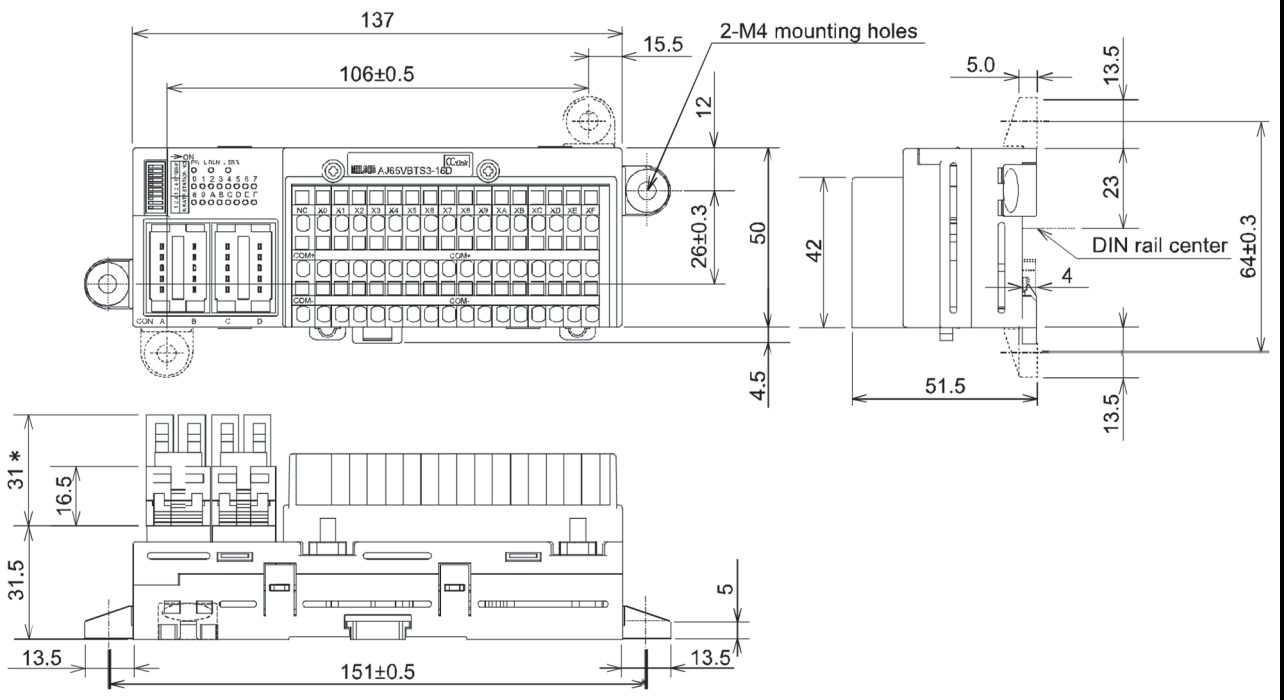

Unit: mm

*: This section should be 14.5mm when an online connector is not installed.

App - 18

AbN
automation

AJ65VBTS□-16□

(When the protective cover is attached)

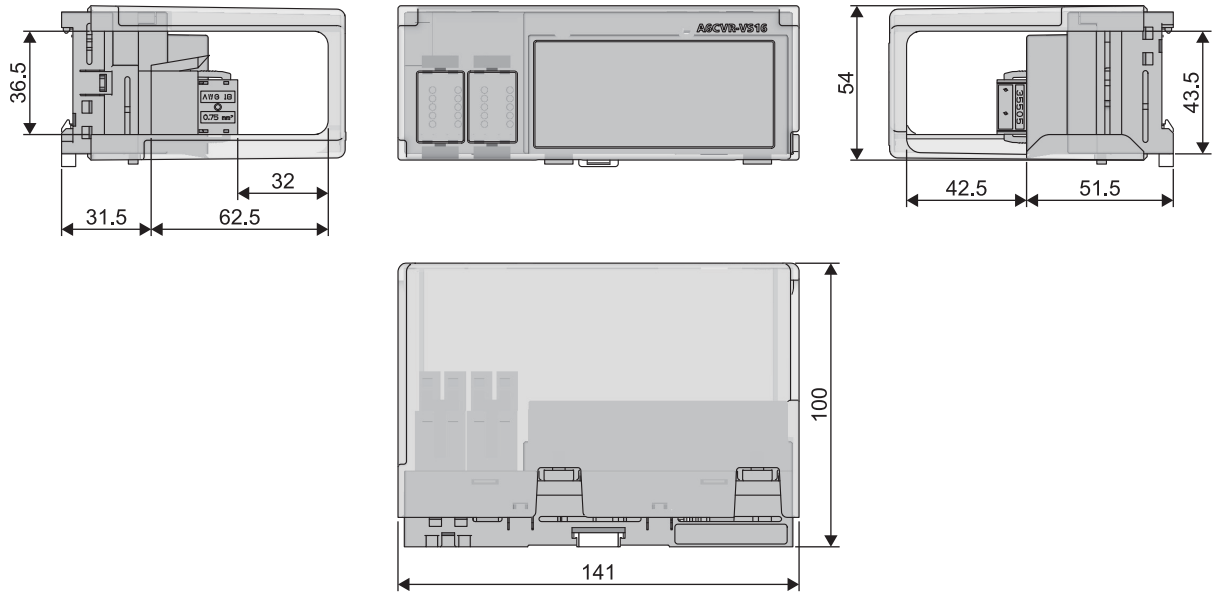

Unit: mm

AJ65VBTS□-32□

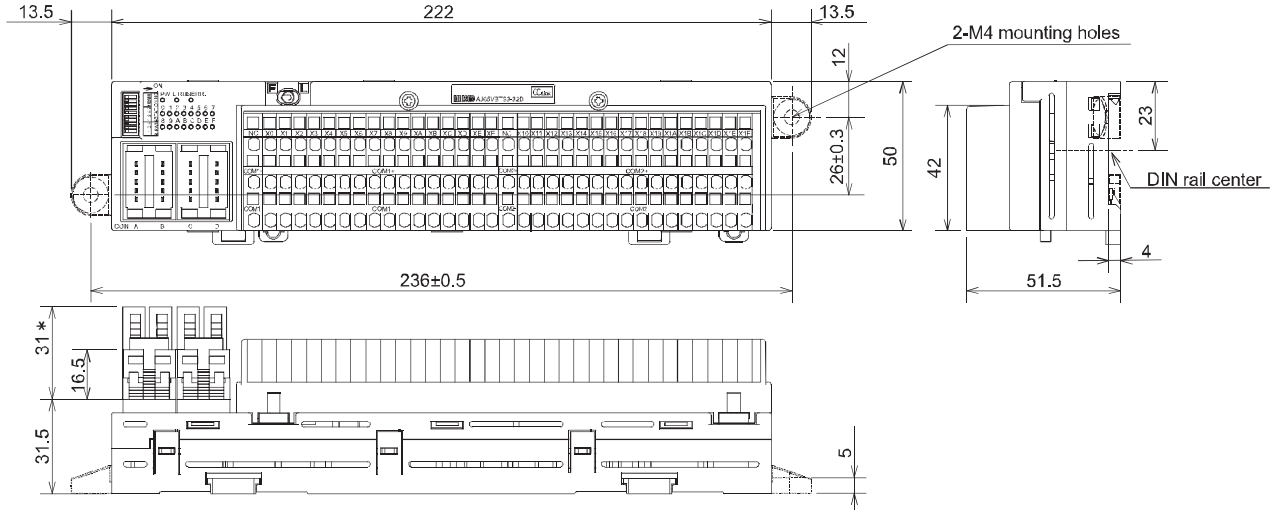

Unit: mm

*: This section should be 14.5mm when an online connector is not installed.

App - 19

Appendix 1.14 AJ65VBTCE□-8□, AJ65VBTCE□-16□, and AJ65VBTCE□-32□ remote I/O module

The external dimensions of the AJ65VBTCE□-8□, AJ65VBTCE□-16 □, and AJ65VBTCE□-32□ remote I/O modules are shown below.

AJ65VBTCE□-8□

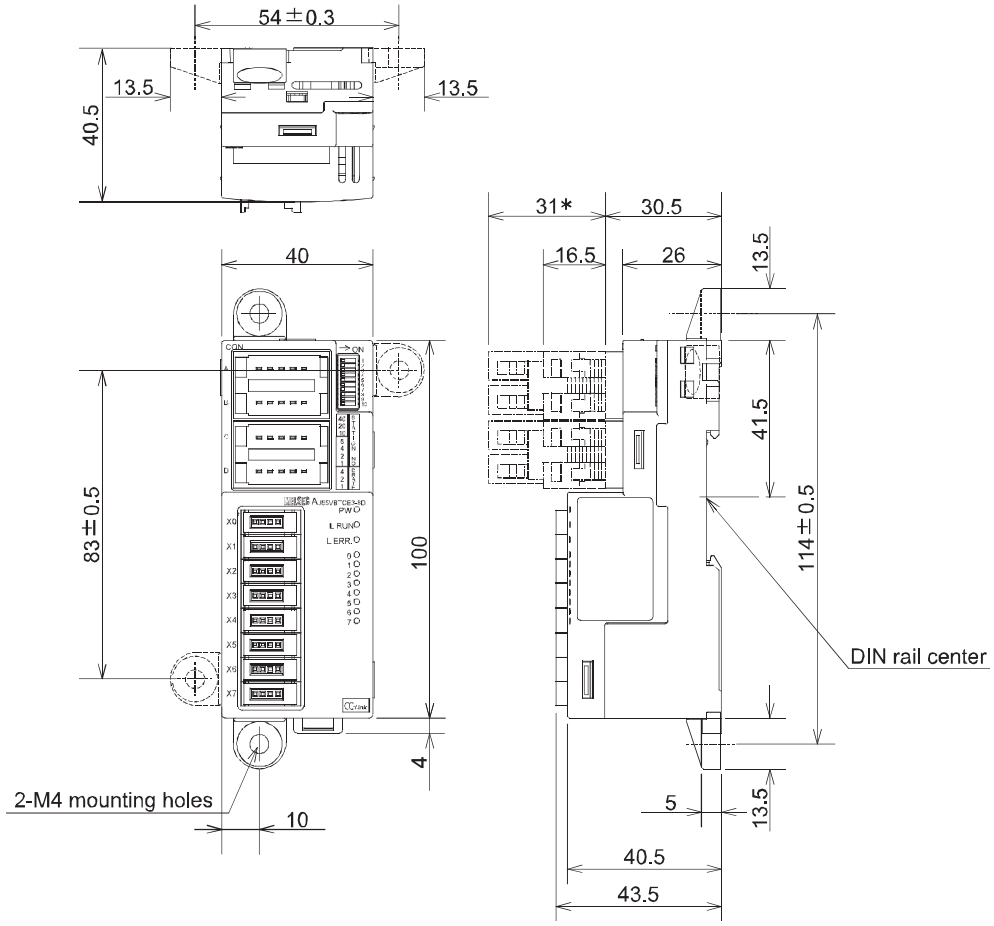

Unit: mm

*: This section should be 14.5mm when an online connector is not installed.

App - 20

AJ65VBTCE□-8□

(When the protective cover attached.)

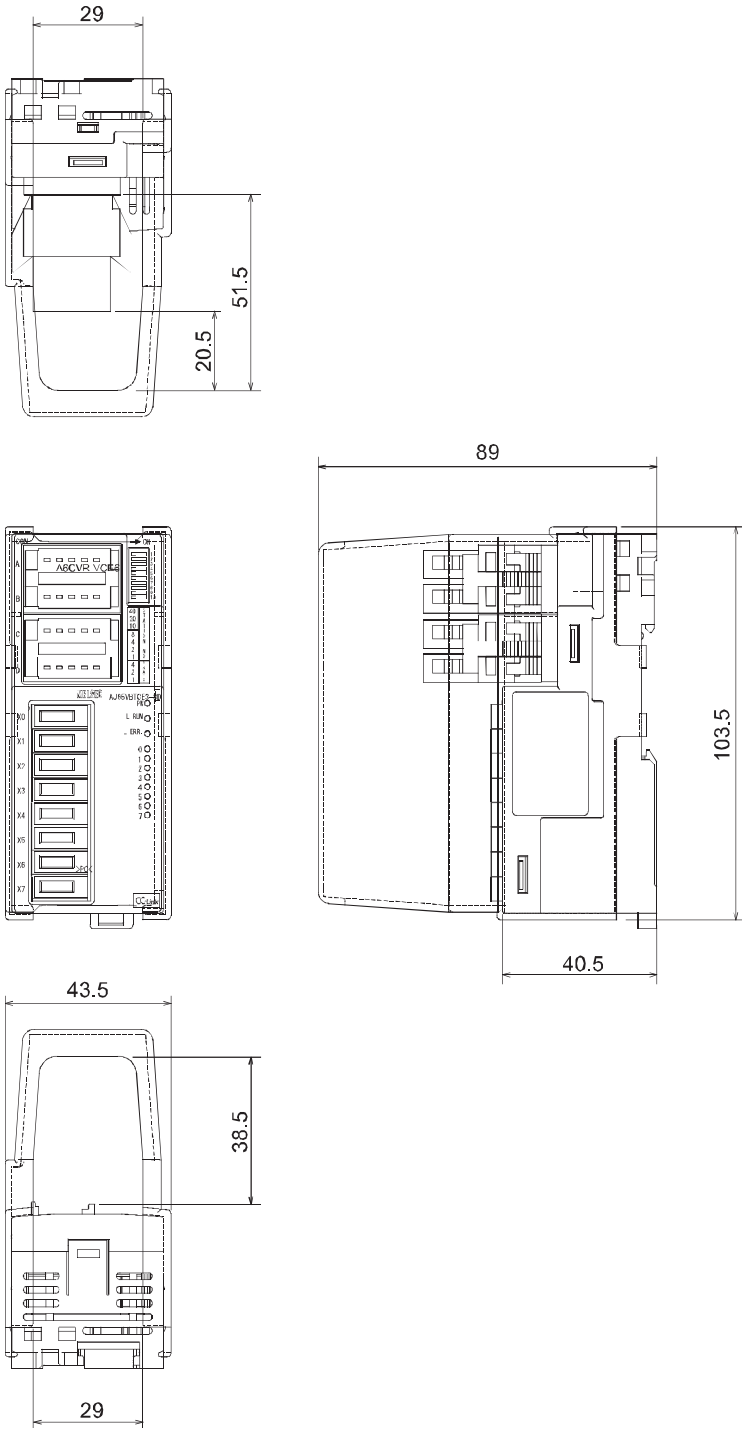

Unit: mm

App - 21

AJ65VBTCE□-16□

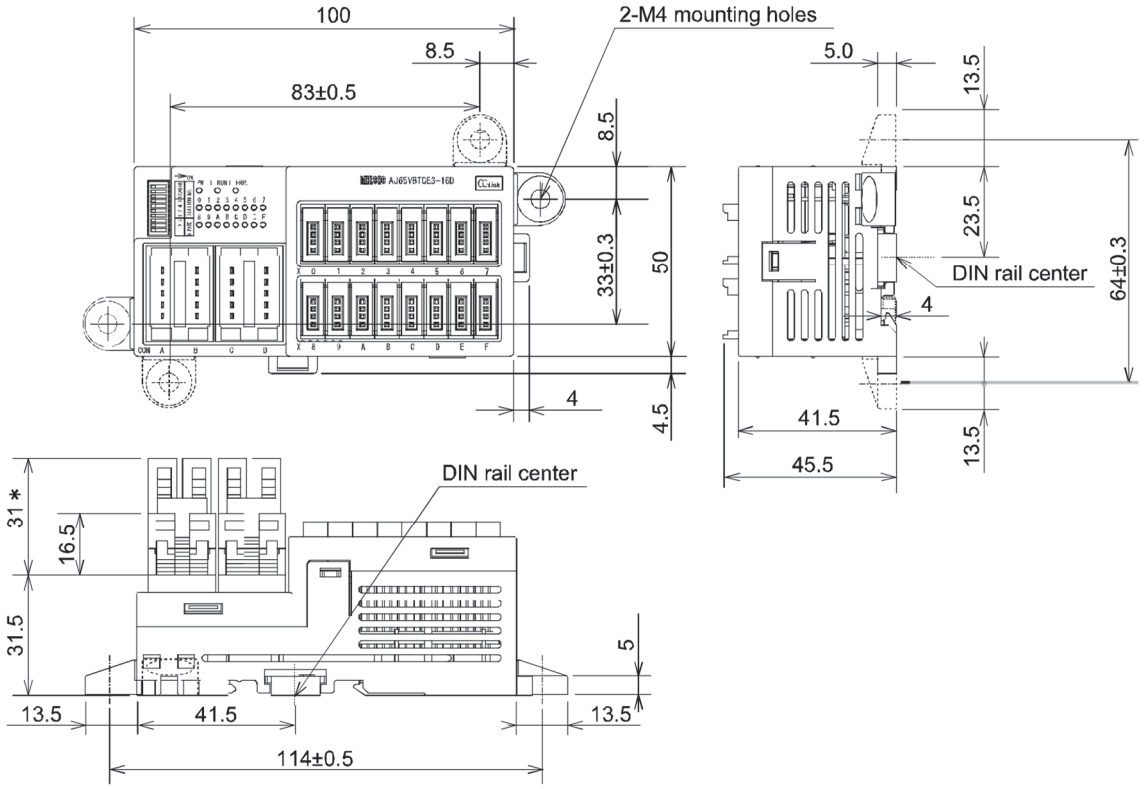

Unit: mm

*: This section should be 14.5mm when an online connector is not installed.

App - 22

AJ65VBTCE□-16□

(When the protective cover attached.)

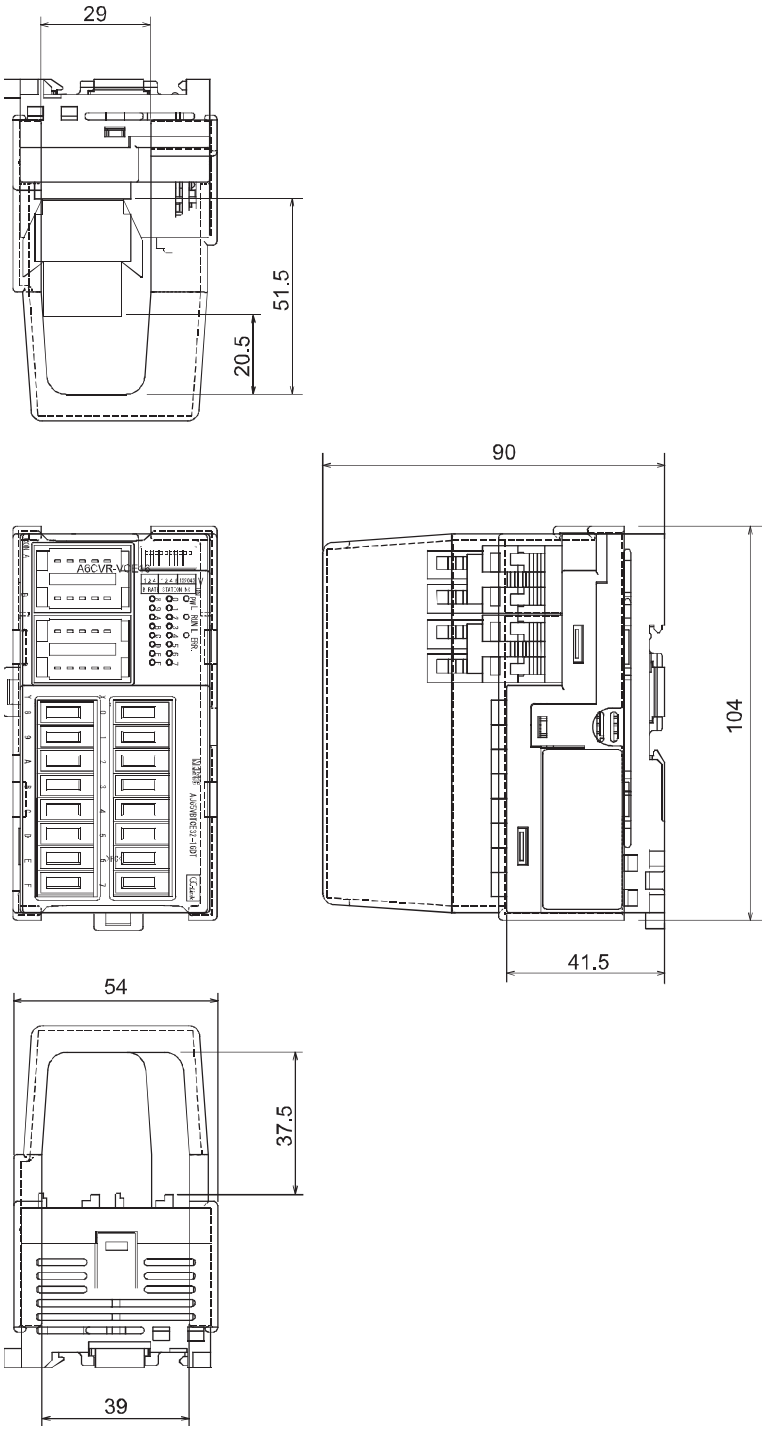

Unit: mm

App - 23

AJ65VBTCE□-32□

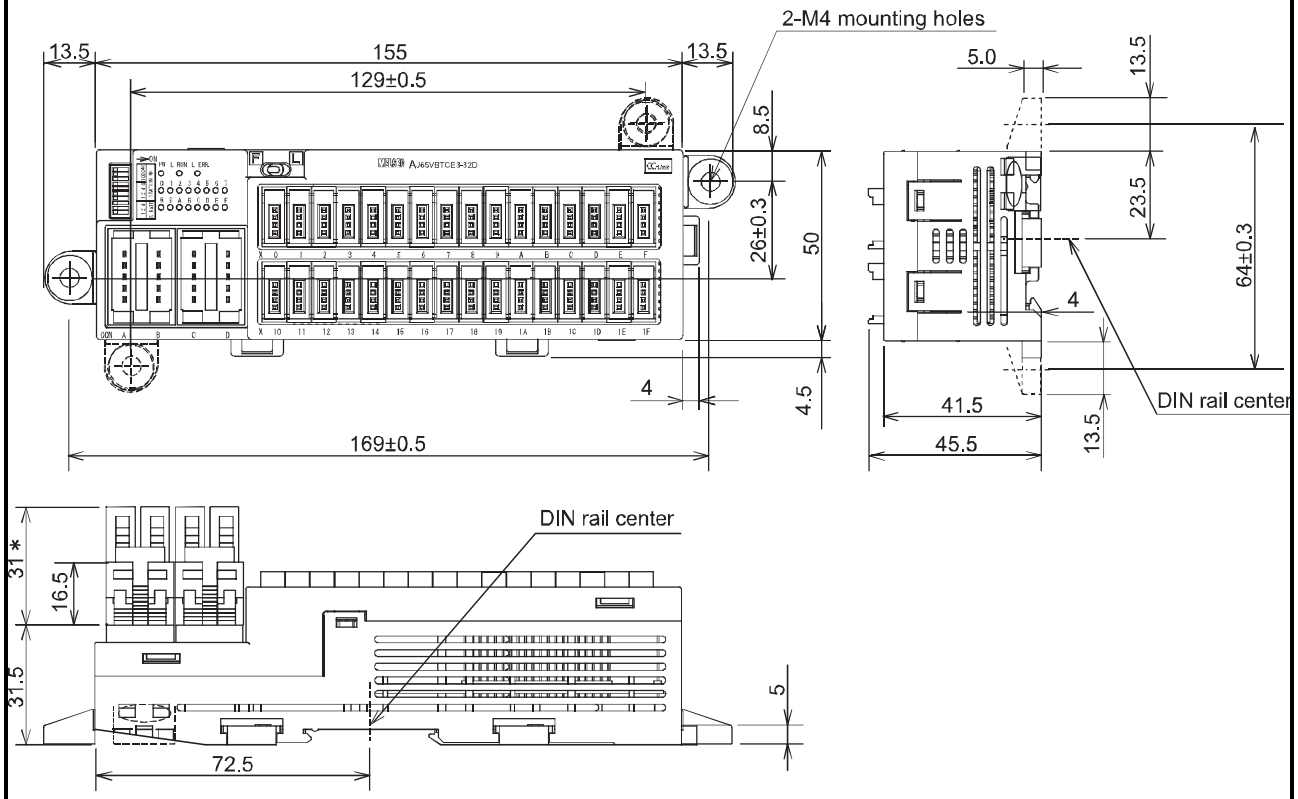

Unit: mm

*: This section should be 14.5mm when an online connector is not installed.

App - 24

Appendix 1.15 AJ65DBTB1-32 ☐ remote I/O module

The external dimensions of the AJ65DBTB1-32 ☐ remote I/O modules are shown below.

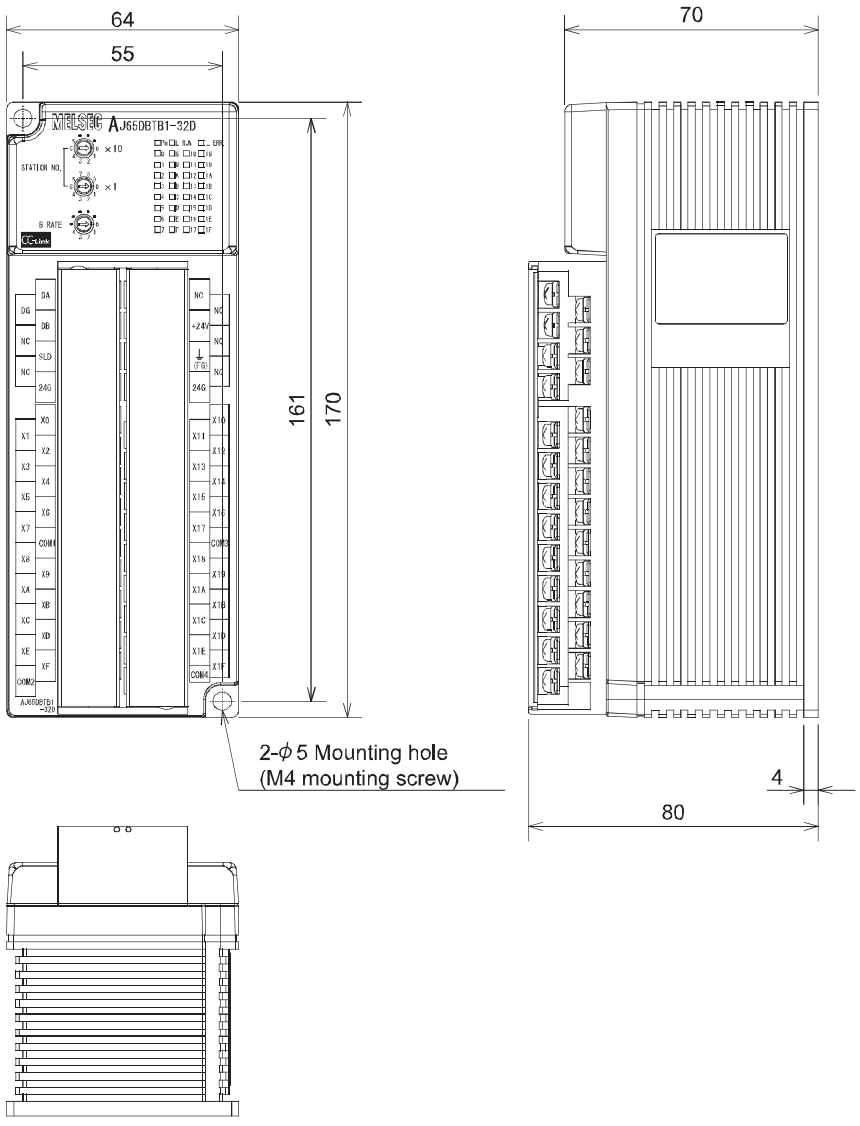

App - 25

Appendix 1.16 AJ65SBTB1-32K□, AJ65SBTB3-16KD, and AJ65SBTB32-16K□ remote I/O module

The external dimensions of the AJ65SBTB1-32K□ , AJ65SBTB3-16KD, and AJ65SBTB32-16K□ remote I/O modules are shown below.

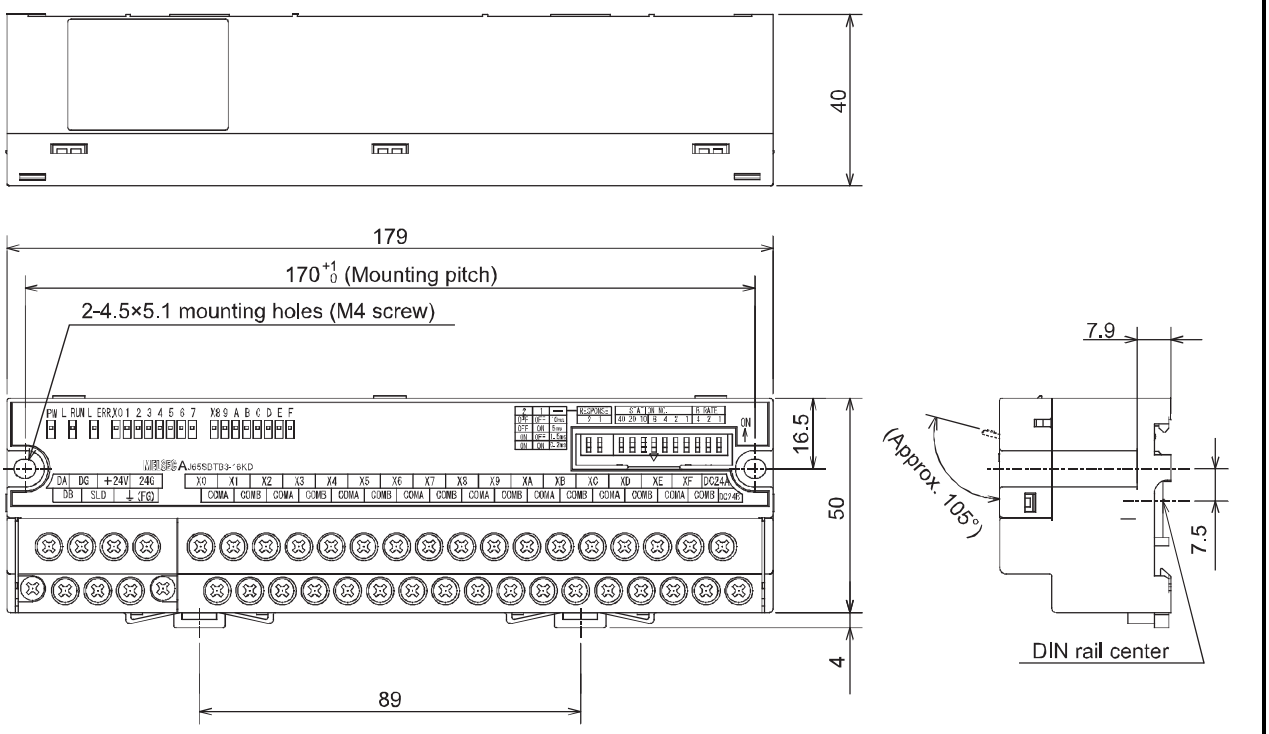

AbN
automation

Appendix 2 CC-Link Versions

There are two versions for CC-Link: Ver.1.00 and Ver.1.10.

(1) Difference between Ver.1.00 and Ver.1.10

The original CC-Link version is Ver.1.00 and there are restrictions on the station-to-station cable length. The improved version is Ver.1.10 and there is no restriction on the station-to-station cable length (20cm or longer, in any case).
For the maximum overall cable distance of Ver.1.10, refer to the user's manual for the master/local module used.
To enable the station-to-station cable length of 20cm or longer, the following conditions must be met.

- All modules connected in the CC-Link system are Ver.1.10-compatible modules.
- Ver.1.10-compatible CC-Link dedicated cables are used in the entire system.

POINT

In a system where both Ver.1.00- and Ver.1.10-compatible CC-Link modules are connected, the specifications of Ver.1.00-compatible module are applied for the maximum overall cable distance and station-to-station cable length.
For the maximum overall cable distance and station-to-station cable length of Ver.1.00, refer to the user's manual for the master/local module used.

App - 27

(2) Checking a version

Ver.1.10-compatible modules have a "CC-Link" logo on the front of the module or on the rating plate.

(a) On the front of the module

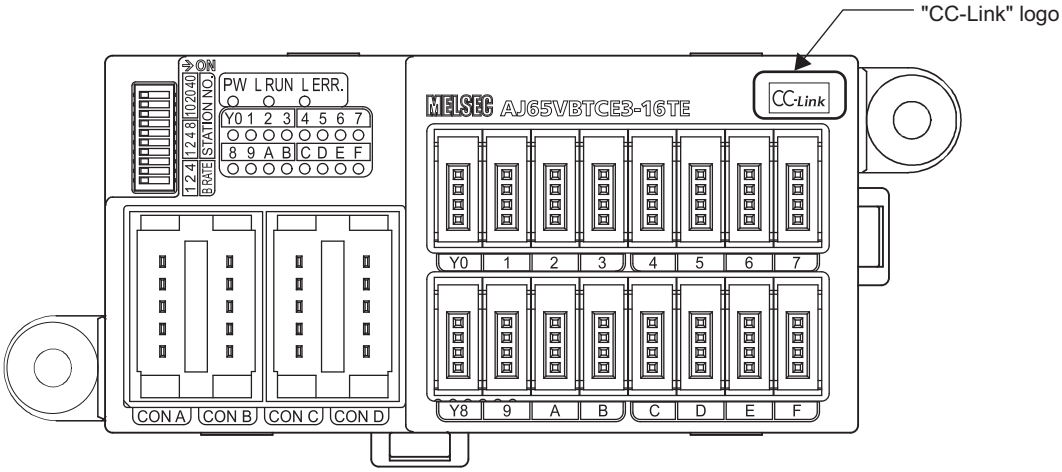

(b) On the rating plate

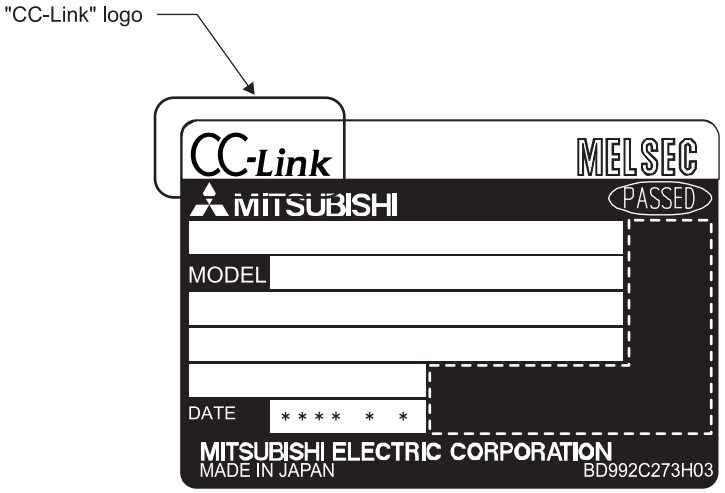

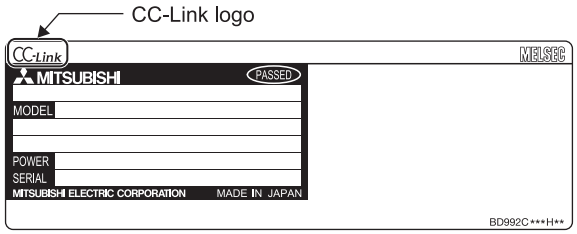

AbN
automation

WARRANTY

Please confirm the following product warranty details before using this product.

1. Gratis Warranty Term and Gratis Warranty Range

If any faults or defects (hereinafter "Failure") found to be the responsibility of Mitsubishi occurs during use of the product within the gratis warranty term, the product shall be repaired at no cost via the sales representative or Mitsubishi Service Company.

However, if repairs are required onsite at domestic or overseas location, expenses to send an engineer will be solely at the customer's discretion. Mitsubishi shall not be held responsible for any re-commissioning, maintenance, or testing on-site that involves replacement of the failed module.

[Gratis Warranty Term]

The gratis warranty term of the product shall be for one year after the date of purchase or delivery to a designated place. Note that after manufacture and shipment from Mitsubishi, the maximum distribution period shall be six (6) months, and the longest gratis warranty term after manufacturing shall be eighteen (18) months. The gratis warranty term of repair parts shall not exceed the gratis warranty term before repairs.

[Gratis Warranty Range]

(1) The range shall be limited to normal use within the usage state, usage methods and usage environment, etc., which follow the conditions and precautions, etc., given in the instruction manual, user's manual and caution labels on the product.

(2) Even within the gratis warranty term, repairs shall be charged for in the following cases.

1. Failure occurring from inappropriate storage or handling, carelessness or negligence by the user. Failure caused by the user's hardware or software design.
2. Failure caused by unapproved modifications, etc., to the product by the user.
3. When the Mitsubishi product is assembled into a user's device, Failure that could have been avoided if functions or structures, judged as necessary in the legal safety measures the user's device is subject to or as necessary by industry standards, had been provided.
4. Failure that could have been avoided if consumable parts (battery, backlight, fuse, etc.) designated in the instruction manual had been correctly serviced or replaced.
5. Failure caused by external irresistible forces such as fires or abnormal voltages, and Failure caused by force majeure such as earthquakes, lightning, wind and water damage.
6. Failure caused by reasons unpredictable by scientific technology standards at time of shipment from Mitsubishi.
7. Any other failure found not to be the responsibility of Mitsubishi or that admitted not to be so by the user.

2. Onerous repair term after discontinuation of production

(1) Mitsubishi shall accept onerous product repairs for seven (7) years after production of the product is discontinued. Discontinuation of production shall be notified with Mitsubishi Technical Bulletins, etc.

(2) Product supply (including repair parts) is not available after production is discontinued.

3. Overseas service

Overseas, repairs shall be accepted by Mitsubishi's local overseas FA Center. Note that the repair conditions at each FA Center may differ.

4. Exclusion of loss in opportunity and secondary loss from warranty liability

Regardless of the gratis warranty term, Mitsubishi shall not be liable for compensation to:

(1) Damages caused by any cause found not to be the responsibility of Mitsubishi.

(2) Loss in opportunity, lost profits incurred to the user by Failures of Mitsubishi products.

(3) Special damages and secondary damages whether foreseeable or not, compensation for accidents, and compensation for damages to products other than Mitsubishi products.

(4) Replacement by the user, maintenance of on-site equipment, start-up test run and other tasks.

5. Changes in product specifications

The specifications given in the catalogs, manuals or technical documents are subject to change without prior notice.

INFORMATION AND SERVICES

For further information and services, please contact your local Mitsubishi Electric sales office or representative.
Visit our website to find our locations worldwide.

MITSUBISHI ELECTRIC Factory Automation Global Website
Locations Worldwide
www.MitsubishiElectric.com/fa/about-us/overseas/

TRADEMARKS

The company names, system names and product names mentioned in this manual are either registered trademarks or trademarks of their respective companies.
In some cases, trademark symbols such as '™' or '®' are not specified in this manual.

SH(NA)-4007-AK(2503)MEE
MODEL: CC-LINK-S-I/O-U-E

MITSUBISHI ELECTRIC CORPORATION

HEAD OFFICE: TOKYO BLDG., 2-7-3, MARUNOUCHI, CHIYODA-KU, TOKYO 100-8310, JAPAN
NAGOYA WORKS: 1-14, YADA-MINAMI 5-CHOME, HIGASHI-KU, NAGOYA 461-8670, JAPAN

When exported from Japan, this manual does not require application to the Ministry of Economy, Trade and Industry for service transaction permission.

Specifications subject to change without notice.