SAFEREADY SFRD4 1055 A

Order Code: **1070246**

Body Detection Type 4 Safety Light Curtain. Basic Version. With Automatic Restart

Safety level
Type 4 - PL e

Protected height (mm)
1060

Resolution (mm)
50

Max. range (m)
18

Restart
Automatic

Functioning system
Emitter / Receiver

Technical Description

Compact Safety Light Curtain: Type 4, SIL 3, SILCL 3, PL e, Cat. 4
Cross Section: 28 x 33 mm
No blind area on both side
Hardware configuration: no programming necessary, easy to install and replace
Connection and configuration through M12 pig-tail connectors
Unshielded cables up to 100 m can be used to connect the Safety Light Curtain
What's in the Box: Emitter, Receiver and Standard Fastening Brackets

Features

Safety level	Type 4 - PL e
Protected height (mm)	1060
Resolution (mm)	50
Controlled height (mm)	1050
Max. range (m)	18
Restart	Automatic
Functioning system	Emitter / Receiver
Safety level (SIL / PL)	Type 4 - SIL 3 - Max SIL 3 - SL 2 - PL e - Cat. 4
Operating temperature (°C)	- 30 ... 55
Response time (ms)	See technical manual
Number of beams	28
Max. length of the connection cables (m)	100
Signalling	LEDs and top LED cap for light curtain's status and diagnostics
Safety output type	2 fail-safe PNP (400 mA at 24 VDC) with protection against short circuit, overload and reverse polarity
Connections	M12 5-pole male pigtail connector (emitter), M12 8-pole male pigtail connector (receiver)
MTTFD (ISO13849) years	20
Safety outputs	2 OSSD PNP (400 mA at 24 VDC)
Storage temperature (°C)	- 30 ⋯ 70
Relative humidity	50% @ 70 °C / 90% @ 20 °C

SAFEREADY SFRD4 1055 A

Safety functions	With external module
Detection	Body
Operating Range (m)	Selectable: 0 ... 8 m - low range / 6 ... 18 m - high range
Protective enclosures	None
Product class	B

Electrical data

Power supply (VDC)	24 ± 20%

Mechanical data

Beam spacing (mm)	40
Overall height (mm)	1068
Cross section dimensions (mm)	28 x 33
Degree of protection	IP65 - IP67
Fastening	Back slot with set of brackets (included)

Technical drawings

A1 (Controlled height) = 1050 mm
A (Overall height) = 1068 mm

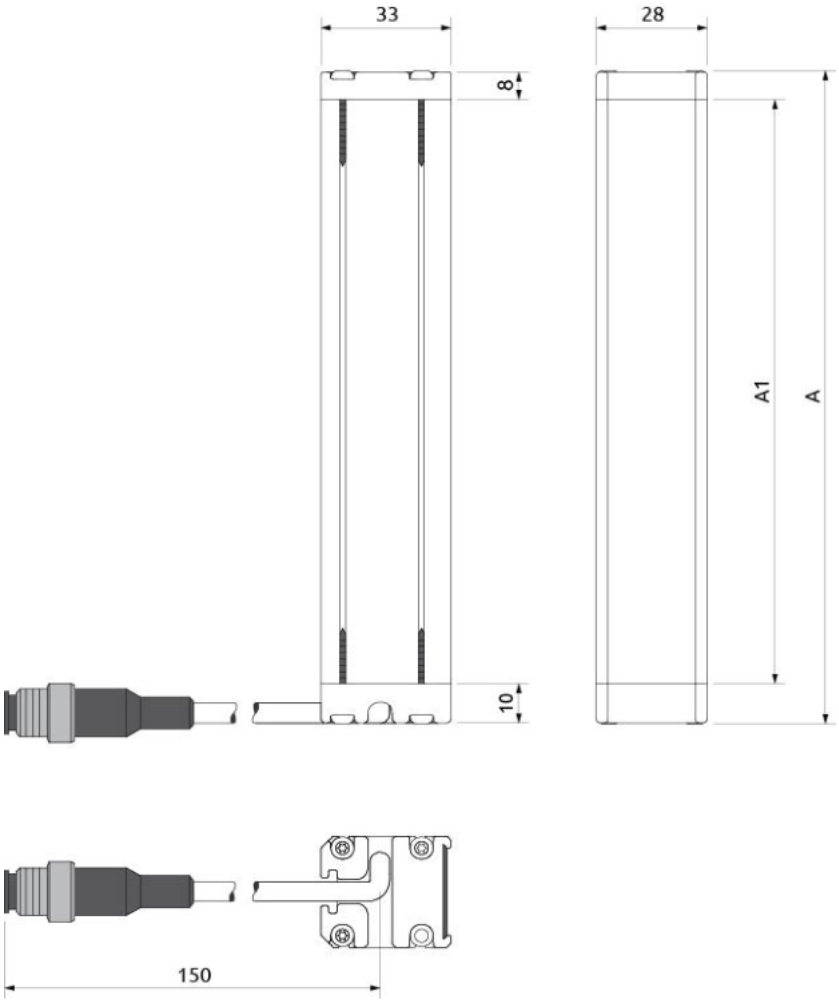

Certificates